Textron Aviation Replacement Part List (RPL) Catalog 2020

Pneumatic de-ice boots
Care products
Prop-de-icers and hardware

Collins Aerospace

TABLE OF CONTENTS

BEECHCRAFT 18 (TWIN BEECH) W/ STC SA1171WE (VOLPAR), SA1636WE, SA2204WE 6
BEECHCRAFT D18 (TWIN BEECH) WITH CONRAD WING TIPS (WITH LIGHT) 7
BEECHCRAFT D18 (TWIN BEECH) WITH CONRAD WING TIPS (WITHOUT LIGHT) 8
BEECHCRAFT D18C (TWIN BEECH) (WITH LIGHT) 9
BEECHCRAFT D18C (TWIN BEECH) (WITHOUT LIGHT) 10
BEECHCRAFT D18S (TWIN BEECH) (WITH LIGHT) 11
BEECHCRAFT D18S (TWIN BEECH) (WITHOUT LIGHT) 12
BEECHCRAFT E18S (TWIN BEECH) (WITH LIGHT) 13
BEECHCRAFT E18S (TWIN BEECH) (WITHOUT LIGHT) 14
BEECHCRAFT E18S-9700 (TWIN BEECH) 15
BEECHCRAFT H18 (TWIN BEECH) (WITH LIGHT) 16
BEECHCRAFT H18 (TWIN BEECH) (WITHOUT LIGHT) 17
BEECHCRAFT 36 (BONANZA) 18
BEECHCRAFT A36 (BONANZA) 19
BEECHCRAFT A36TC (BONANZA) 20
BEECHCRAFT 95-55 (BARON) 21
BEECHCRAFT 95-A55 (BARON) 22
BEECHCRAFT 95-A55 (BARON) S/N TC-400 UP 23
BEECHCRAFT 95-B55 (BARON) S/N TC-371 24
BEECHCRAFT 95-B55 (BARON) S/N TC-502 THRU TC-1607 25
BEECHCRAFT 95-C55 (BARON) S/N TE-1 UP 27
BEECHCRAFT 95-C55 (BARON) S/N TC-350 28
BEECHCRAFT 95-C55A (BARON) 29
BEECHCRAFT D55 (BARON) 30
BEECHCRAFT D55A (BARON) 31
BEECHCRAFT E55 (BARON) 32
BEECHCRAFT E55A (BARON) 33
BEECHCRAFT 56TC (BARON) 34
BEECHCRAFT A56TC (BARON) S/N TG-78 UP 35
BEECHCRAFT 58 (BARON) S/N TH-1 THRU TH-368, TH-370, TH-371 36
BEECHCRAFT 58 (BARON) S/N TH-369 37
BEECHCRAFT 58 (BARON) S/N TH-372 THRU TH-374 38
BEECHCRAFT 58 (BARON) S/N TH-375 THRU TH-1471, TH-1476, TH-1487, TH-1489, TH-1498 39
BEECHCRAFT 58 (BARON) S/N TH-1472 UP EXCEPT TH-1476, TH-1487, TH-1489, TH-1498 40
BEECHCRAFT 58P (BARON) S/N TJ-3 THRU TJ-31, TJ-33 THRU TJ-37 41
BEECHCRAFT 58P (BARON) S/N TJ-32, TJ-38 UP 42
BEECHCRAFT 58TC (BARON) 43
BEECHCRAFT 60 (DUKE) 44
BEECHCRAFT 60 (DUKE) S/N P-50 UP 45
BEECHCRAFT A60 (DUKE) S/N P-123 UP 46
BEECHCRAFT B60 (DUKE) S/N P-247 THRU P-253 (DUKE) 47
BEECHCRAFT B60 (DUKE) S/N P-252 UP WITH LIGHTS 48
BEECHCRAFT B60 (DUKE) S/N P-252 UP WITHOUT LIGHTS 49
BEECHCRAFT 65 (QUEEN AIR) 50
BEECHCRAFT A65 (QUEEN AIR) 51
BEECHCRAFT 65-A80 (QUEEN AIR) 52
BEECHCRAFT 65-A80-8800 (QUEEN AIR) 53
BEECHCRAFT 65-B80 (QUEEN AIR) 54
BEECHCRAFT 65-88 (QUEEN AIR) 55
BEECHCRAFT 65-90 (KING AIR) 56
BEECHCRAFT 65-A90 (KING AIR) 57
BEECHCRAFT 65-A90-1 (KING AIR) 58
BEECHCRAFT 65-A90-2 (KING AIR) 59
BEECHCRAFT 65-A90-3 (KING AIR) 60
BEECHCRAFT 65-A90-4 (KING AIR) 61
BEECHCRAFT 70 (QUEEN AIR) 62
BEECHCRAFT B90 (KING AIR) S/N LJ-318 THRU LJ-376 63
BEECHCRAFT B90 (KING AIR) S/N LJ-318 THRU LJ-501 64
BEECHCRAFT C90 (KING AIR) S/N LJ-502 THRU LJ-577 (WITH LIGHTS) 65
BEECHCRAFT C90 (KING AIR) S/N LJ-502 THRU LJ-624 (WITHOUT LIGHTS) 66

TABLE OF CONTENTS

BEECHCRAFT C90 (KING AIR) S/N LJ-625 THRU LJ-639 67
BEECHCRAFT C90 (KING AIR) S/N LJ-640 THRU LJ-658 68
BEECHCRAFT C90 (KING AIR) S/N LJ-660 THRU LJ-1062 69
BEECHCRAFT C90A (KING AIR) 70-71
BEECHCRAFT C90B (KING AIR) 72-73
BEECHCRAFT C90GT (KING AIR) 74-75
BEECHCRAFT C90GTi (KING AIR) 76-77
BEECHCRAFT C90GTx (KING AIR) 78-79
BEECHCRAFT C90-1 (KING AIR) S/N LJ-986 THRU LJ-1062 80
BEECHCRAFT E90 (KING AIR) S/N LW-1 THRU LW-119 81
BEECHCRAFT E90 (KING AIR) S/N LW-120 UP 82-83
BEECHCRAFT F90 (KING AIR) 84
BEECHCRAFT F90-1 (KING AIR) 85
BEECHCRAFT H90 (T-44A) (KING AIR/PEGASUS) 86-87
BEECHCRAFT 95 (TRAVEL AIR) 88
BEECHCRAFT B95 (TRAVEL AIR) 89
BEECHCRAFT B95A (TRAVEL AIR) 90
BEECHCRAFT D95A (TRAVEL AIR) 91
BEECHCRAFT E95 (TRAVEL AIR) 92
BEECHCRAFT 99 (AIRLINER) 93
BEECHCRAFT 99A (AIRLINER) 94
BEECHCRAFT A99 (AIRLINER) 95
BEECHCRAFT A99A (AIRLINER) 96
BEECHCRAFT B99 (AIRLINER) 97
BEECHCRAFT C99 (COMMUTER) 98
BEECHCRAFT 100 (KING AIR) 99
BEECHCRAFT A100 (KING AIR) 100
BEECHCRAFT A100A (KING AIR) 101
BEECHCRAFT A100C (KING AIR) 102
BEECHCRAFT B100 (KING AIR) 103
BEECHCRAFT 200 (SUPER KING AIR) 104
BEECHCRAFT A200 (SUPER KING AIR) 105
BEECHCRAFT A200C (SUPER KING AIR) 106
BEECHCRAFT A200CT (SUPER KING AIR) 107
BEECHCRAFT B200 (SUPER KING AIR) 108
BEECHCRAFT 200C (SUPER KING AIR) 109
BEECHCRAFT B200C (SUPER KING AIR) 110
BEECHCRAFT 200CT (SUPER KING AIR) 111
BEECHCRAFT B200CT (SUPER KING AIR) 112
BEECHCRAFT 200T (SUPER KING AIR) 113
BEECHCRAFT B200T (SUPER KING AIR) 114
BEECHCRAFT B200GT (SUPER KING AIR) 115
BEECHCRAFT RAISBECK CONVERSION 200 (SUPER KING AIR) 116
BEECHCRAFT RAISBECK CONVERSION 200C (SUPER KING AIR) 117
BEECHCRAFT RAISBECK CONVERSION 200CT (SUPER KING AIR) 118
BEECHCRAFT RAISBECK CONVERSION 200T (SUPER KING AIR) 119
BEECHCRAFT RAISBECK CONVERSION B200C (SUPER KING AIR) 120
BEECHCRAFT RAISBECK CONVERSION B200CT (SUPER KING AIR) 121
BEECHCRAFT RAISBECK CONVERSION B200T (SUPER KING AIR) 122
BEECHCRAFT 300 (SUPER KING AIR) 123
BEECHCRAFT 300LW (SUPER KING AIR) 124
BEECHCRAFT B300 (SUPER KING AIR) 125
BEECHCRAFT B300C (SUPER KING AIR) 126
BEECHCRAFT 350 (SUPER KING AIR) 127
BEECHCRAFT B350 (SUPER KING AIR) 128
BEECHCRAFT 1900 (AIRLINER) 129-130
BEECHCRAFT 1900C (AIRLINER) S/N UB-1 UP 131-132
BEECHCRAFT 1900C (AIRLINER) S/N UC-1 UP 133-136
BEECHCRAFT 1900C (AIRLINER) S/N UC-31 UP 137-140
BEECHCRAFT 1900D (AIRLINER) 141-142

TABLE OF CONTENTS

BEECHCRAFT 2000 (STARSHIP) 143
CESSNA 208 (CARAVAN) 147-148
CESSNA 208A (CARAVAN) 149-152
CESSNA 208B (GRAND CARAVAN) 153-156
CESSNA 210 (CENTURION) 157
CESSNA 210A (CENTURION) 158
CESSNA 210H (CENTURION) 159
CESSNA 210J (CENTURION) 160
CESSNA 210K (CENTURION) 161
CESSNA 210L (CENTURION) 162
CESSNA 210M (CENTURION) S/N TO 21062968 163
CESSNA 210N (CENTURION) S/N 21062969 THRU 21064772 164
CESSNA 210R (CENTURION) 165
CESSNA P210N (PRESSURIZED CENTURION) S/N P21000001 THRU P21000120 166
CESSNA P210N (PRESSURIZED CENTURION) S/N P21000121 THRU P21000834 167
CESSNA P210R (PRESSURIZED CENTURION) 168
CESSNA T210F (TURBO CENTURION) 169
CESSNA T210G (TURBO CENTURION) 170
CESSNA T210H (TURBO CENTURION) 171
CESSNA T210J (TURBO CENTURION) 172
CESSNA T210K (TURBO CENTURION) 173
CESSNA T210L (TURBO CENTURION) 174
CESSNA T210M (TURBO CENTURION) 175
CESSNA T210M (TURBO CENTURION) S/N TO 21062968 176
CESSNA T210N (TURBO CENTURION) 177
CESSNA T210R (TURBO CENTURION) 178
CESSNA T303 (CRUSADER) 179-180
CESSNA 310 181-182
CESSNA 310A (MILITARY DESGINATION U-3A) 183-184
CESSNA 310B 185-186
CESSNA 310C 187-188
CESSNA 310D 189-190
CESSNA 310E (MILITARY DESIGNATION U-3B) 191-192
CESSNA 310F 193-194
CESSNA 310G 195-196
CESSNA 310H 197-198
CESSNA 310I 199-200
CESSNA 310J 201-202
CESSNA 310K 203-204
CESSNA 310L 205-206
CESSNA 310N 207-208
CESSNA 310P 209-210
CESSNA 310Q 211-212
CESSNA 310R UP TO R0800 213-214
CESSNA 310R R0801 & UP 215-216
CESSNA 320 (SKYNIGHT) 218
CESSNA 320A (SKYNIGHT) 219
CESSNA 320B (SKYNIGHT) 220
CESSNA 320C (SKYNIGHT) 221
CESSNA 320D (EXECUTIVE SKYNIGHT) 222
CESSNA 320E (EXECUTIVE SKYNIGHT) 223
CESSNA 320F (EXECUTIVE SKYNIGHT) 224
CESSNA 335 226
CESSNA 336 (SKYMASTER) 227
CESSNA 337 (SUPER SKYMASTER) 228
CESSNA 337F/G/H (SUPER SKYMASTER) S/N UP TO P33701763 229
CESSNA 337F/G/H (SUPER SKYMASTER) S/N P33701764 UP 230
CESSNA T337F (TURBO SUPER SKYMASTER) 221
CESSNA T337G (SUPER SKYMASTER) 232
CESSNA T337H (TURBO SUPER SKYMASTER) 233
CESSNA T337H-SP (SUPER SKYMASTER) 234
CESSNA 340 235-236
CESSNA 340A S/N 340A0001 THRU 340A0125 237-238
CESSNA 340A S/N 340A0201 UP 239-240
CESSNA 401 S/N TO 401-0144 (UTILINER/BUSINESSLINER) 241-242

TABLE OF CONTENTS

CESSNA 401 S/N 401-0145 UP (UTILINER/BUSINESSLINER) 243-244
CESSNA 401A (UTILINER/BUSINESSLINER) 245-246
CESSNA 401B (UTILINER/BUSINESSLINER SERIES) 247-248
CESSNA 402 (UTILINER/BUSINESSLINER) S/N TO 402-0144 249-250
CESSNA 402 (UTILINER/BUSINESSLINER) S/N 402-0145 UP 251-252
CESSNA 402A (UTILINER/BUSINESSLINER) 253-254
CESSNA 402B (UTILINER/BUSINESSLINER) S/N TO 402B0800 255-256
CESSNA 402B (UTILINER/BUSINESSLINER) S/N 402B801 UP 257
CESSNA 402C (UTILINER/BUSINESSLINER) 259-260
CESSNA 404 (TITAN) TO S/N 404-0600 261-262
CESSNA 404 (TITAN) S/N 404-0601 UP 263-264
CESSNA (REIMS) F-406 265-266
CESSNA 411 267-268
CESSNA 414 (CHANCELLOR) S/N TO 414-0600 269-270
CESSNA 414 (CHANCELLOR) S/N 414-0601 UP 271
CESSNA 414A (CHANCELLOR) WITHOUT LIGHTS 273-274
CESSNA 414A (CHANCELLOR) WITH LIGHTS 275-276
CESSNA 421 (GOLDEN EAGLE) 277-278
CESSNA 421A (GOLDEN EAGLE) 279-280
CESSNA 421B (GOLDEN EAGLE) S/N TO 421B012 281-282
CESSNA 421B (GOLDEN EAGLE) S/N 421B0121 THRU 421B0800 283-284
CESSNA 421B (GOLDEN EAGLE) S/N 421B0801 UP 285-286
CESSNA 421C (GOLDEN EAGLE) WITH LIGHTS 287-288
CESSNA 421C (GOLDEN EAGLE) WITHOUT LIGHTS 289-290
CESSNA 425 (CONQUEST I) S/N TO 425-0190 291
CESSNA 425 (CONQUEST I) S/N 425-0191 UP 292
CESSNA 441 (CONQUEST II) TO S/N 441-0102 293-294
CESSNA 441 (CONQUEST II) S/N 441-0103 UP 295-296
CESSNA 500 (CITATION I) TO S/N 500-0349 297-298
CESSNA 500 (CITATION I) S/N 500-0350 & UP 299-300
CESSNA 501 (CITATION 1/SP) 301-302
CESSNA 510 (MUSTANG) 303
CESSNA 525 (CITATIONJET CJ1) THRU S/N 525-0501 304
CESSNA 525 (CITATIONJET CJ1) S/N 525-0502 UP 305
CESSNA 525A (CITATIONJET CJ2) 306
CESSNA 525B (CITATIONJET CJ3) 307
CESSNA 525C (CITATIONJET CJ4) 308
CESSNA 550 (CITATION II/BRAVO) 309-310
CESSNA 551 (CITATION II/SP) 311-312
CESSNA 560 (CITATION V/ULTRA) 314
CESSNA 560 XL (EXCEL) 315-316
CESSNA 560 XLS (EXCEL) 317-318
CESSNA 560 XLS+ (EXCEL) 319-320
PNEUMATIC DE-ICING SYSTEM COMPONENTS 321
INSTALLATION, MAINTENANCE & REPAIR MATERIALS 324-325
PROP DE-ICERS AND HARDWARD KITS 326-341
COLLINS AEROSPACE "ON-CONDITION" STATEMENT FOR AGE-SENSITIVE PRODUCTS 342-345

BEECHCRAFT 18 (TWIN BEECH) W/ STC SA1171WE (VOLPAR), SA1636WE, SA2204WE

STANDARD DE-ICE BOOTS

POSITION ID	GOODRICH PART NUMBER	AIRCRAFT OEM P/N	DESCRIPTION	QTY PER AIRCRAFT	WT
1	23S-2081-9-1	18-381000-9	NACELLE-BREAK LH DE-ICE BOOT	1	2.2
2	23S-2081-9-2	18-381000-10	NACELLE-BREAK RH DE-ICE BOOT	1	2.2
3	23S-2081-8-1		LIGHT-TIP LH DE-ICE BOOT	1	5.6
4	23S-2081-8-2		LIGHT-TIP RH DE-ICE BOOT	1	5.6
5	23S-2081-2-1	18-3811000-7	HORIZONTAL STABILIZER LH/RH DE-ICE BOOT	2	3.3

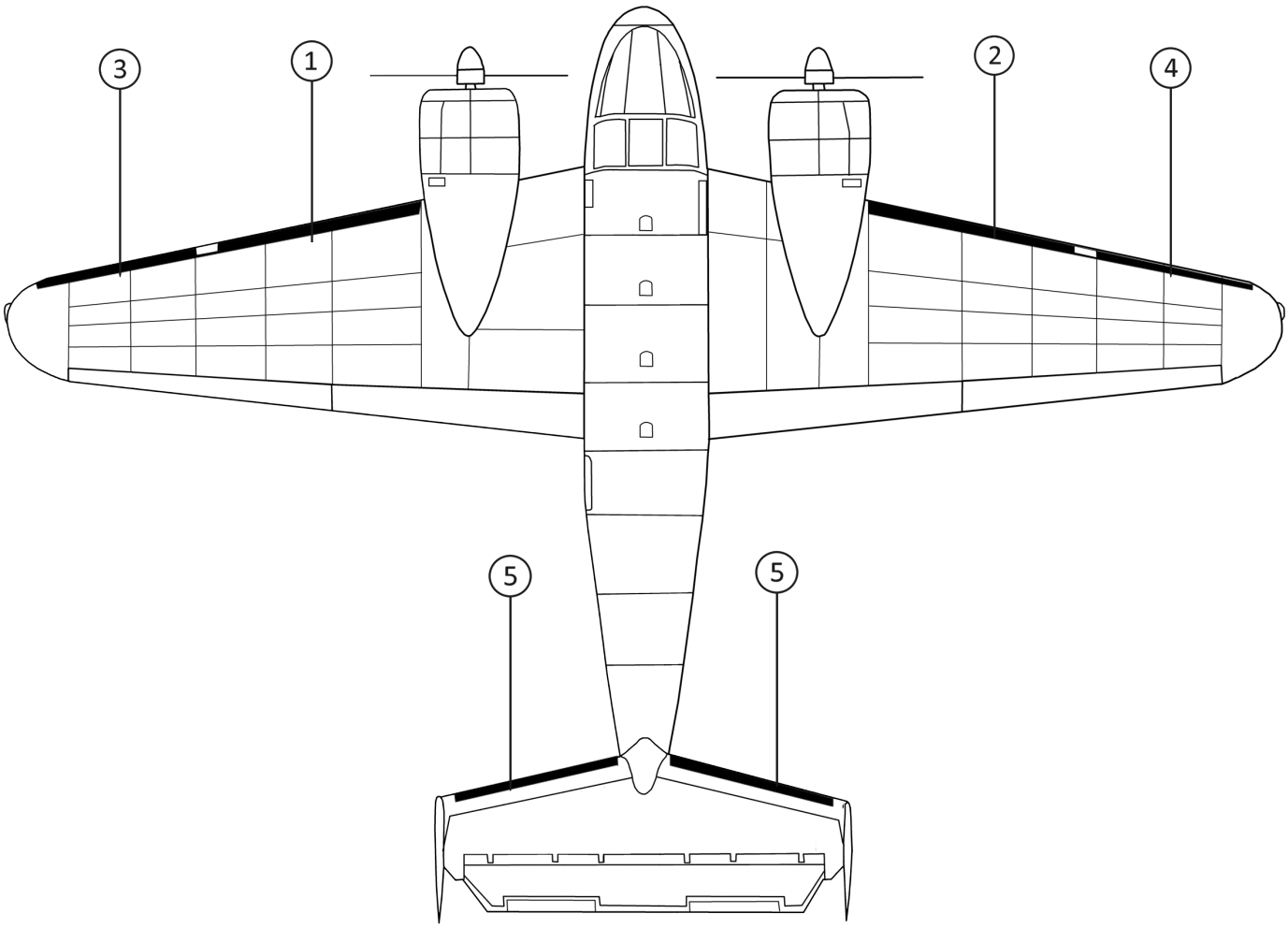

BEECHCRAFT D18 (TWIN BEECH) WITH CONRAD WING TIPS (WITH LIGHT)

STANDARD DE-ICE BOOTS

POSITION ID	GOODRICH PART NUMBER	AIRCRAFT OEM P/N	DESCRIPTION	QTY PER AIRCRAFT	WT
1	23S-2081-9-1	18-381000-9	NACELLE-BREAK LH DE-ICE BOOT	1	2.2
2	23S-2081-9-2	18-381000-10	NACELLE-BREAK RH DE-ICE BOOT	1	2.2
3	23S-2081-11-1	18-381000-13	BREAK-TIP LH DE-ICE BOOT	1	4.5
4	23S-2081-11-2	18-381000-14	BREAK-TIP RH DE-ICE BOOT	1	4.5
5	23S-2081-2-1	18-3811000-7	HORIZONTAL STABILIZER LH/RH DE-ICE BOOT	2	3.3
6	23S-2081-13-1	18-381000-15	VERTICAL STABILIZER LH DE-ICE BOOT	1	1.3
7	23S-2081-13-2	18-381000-16	VERTICAL STABILIZER RH DE-ICE BOOT	1	1.3

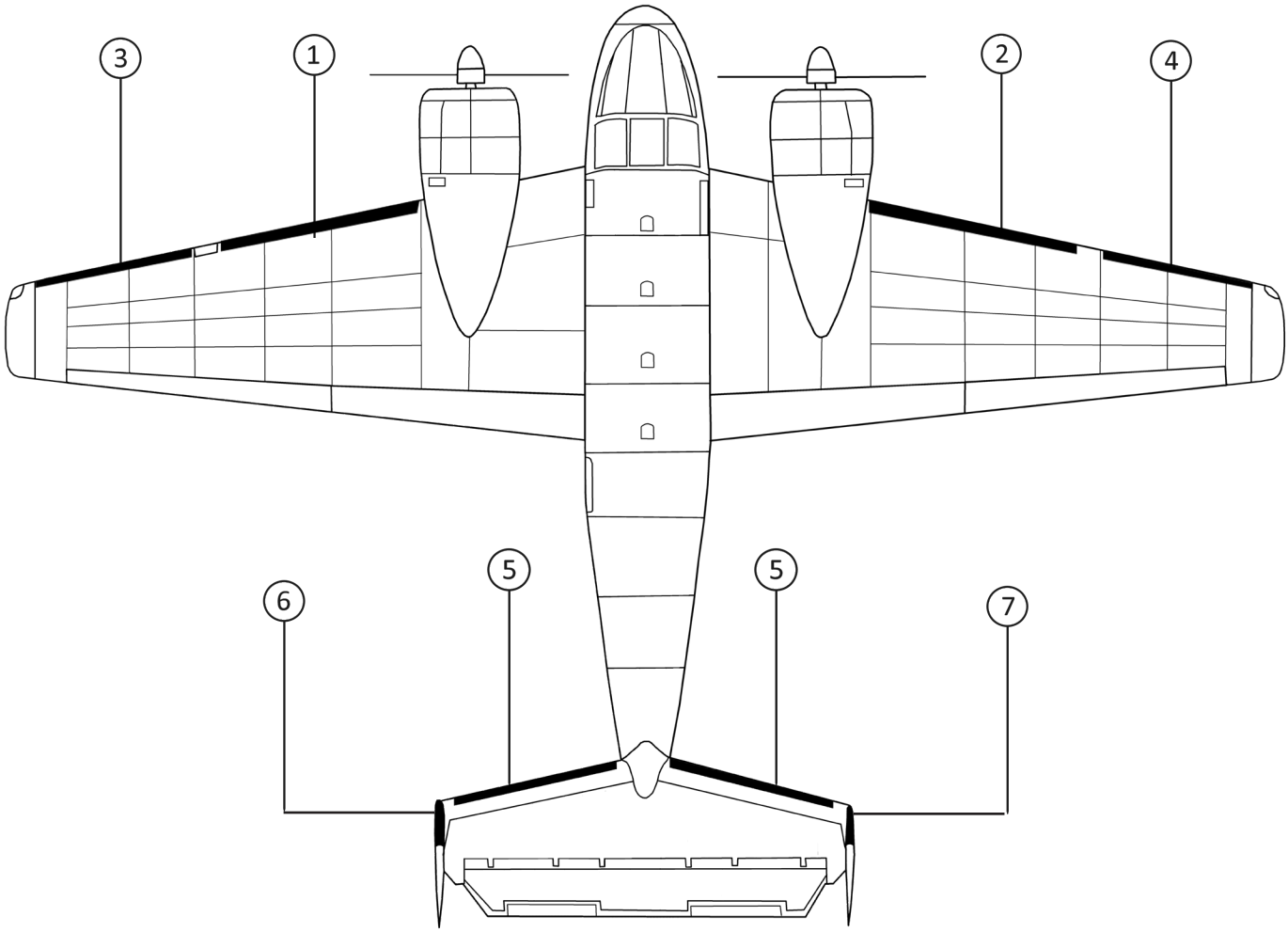

BEECHCRAFT D18 (TWIN BEECH) WITH CONRAD WING TIPS (WITHOUT LIGHT)

STANDARD DE-ICE BOOTS

POSITION ID	GOODRICH PART NUMBER	AIRCRAFT OEM P/N	DESCRIPTION	QTY PER AIRCRAFT	WT
1	23S-2081-9-1	18-381000-9	NACELLE-BREAK LH DE-ICE BOOT	1	2.2
2	23S-2081-9-2	18-381000-10	NACELLE-BREAK RH DE-ICE BOOT	1	2.2
3	23S-2081-10-1	18-381000-11	BREAK-TIP LH DE-ICE BOOT	1	5.1
4	23S-2081-10-2	18-381000-12	BREAK-TIP RH DE-ICE BOOT	1	5.1
5	23S-2081-2-1	18-3811000-7	HORIZONTAL STABILIZER LH/RH DE-ICE BOOT	2	3.3
6	23S-2081-13-1	18-381000-15	VERTICAL STABILIZER LH DE-ICE BOOT	1	1.3
7	23S-2081-13-2	18-381000-16	VERTICAL STABILZER RH DE-ICE BOOT	1	1.3

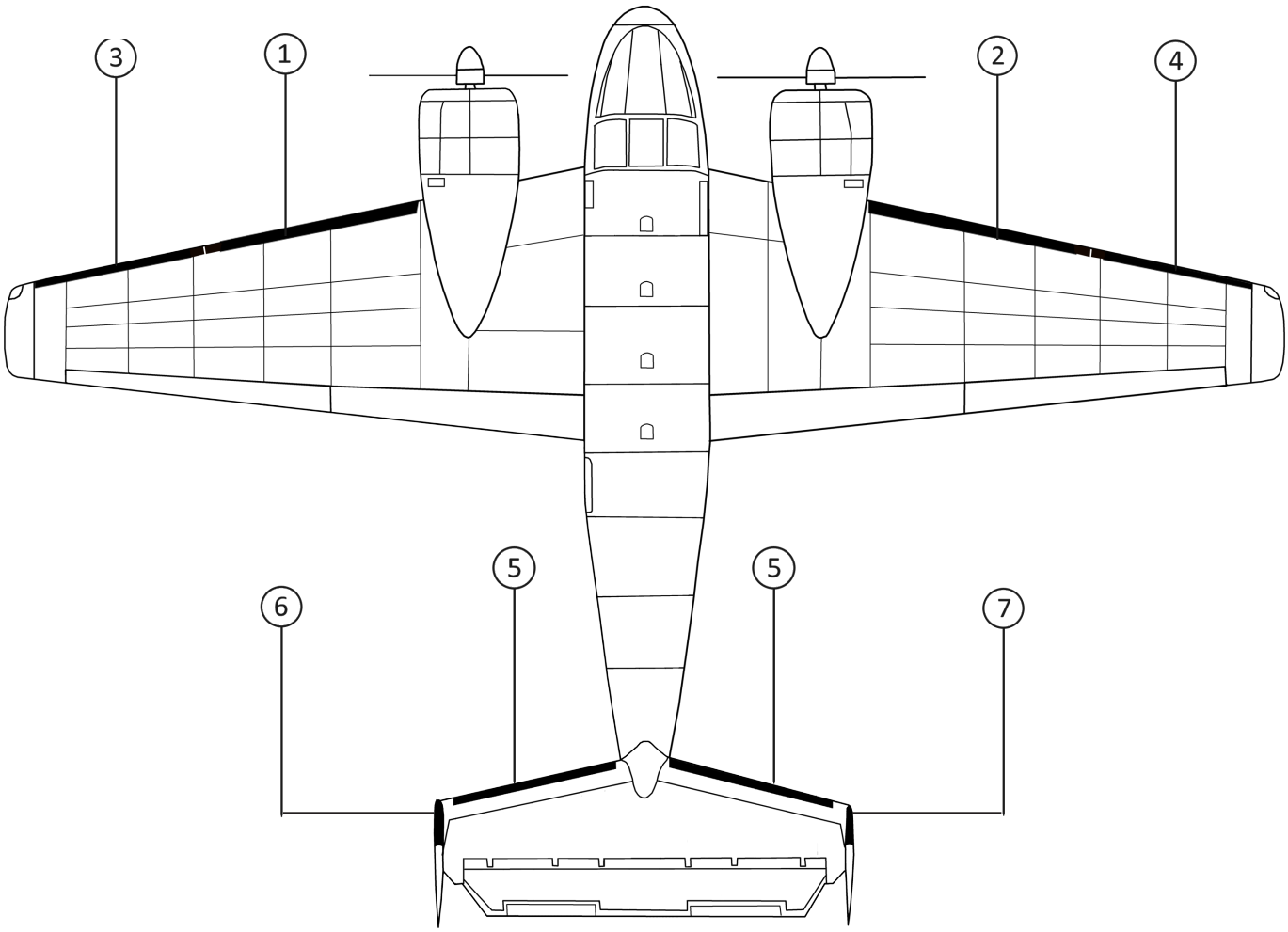

BEECHCRAFT D18C (TWIN BEECH) (WITH LIGHT)

STANDARD DE-ICE BOOTS

POSITION ID	GOODRICH PART NUMBER	AIRCRAFT OEM P/N	DESCRIPTION	QTY PER AIRCRAFT	WT
1	23S-2081-9-1	18-381000-9	NACELLE-BREAK LH DE-ICE BOOT	1	2.2
2	23S-2081-9-2	18-381000-10	NACELLE-BREAK RH DE-ICE BOOT	1	2.2
3	23S-2081-11-1	18-381000-13	BREAK-TIP LH DE-ICE BOOT	1	4.5
4	23S-2081-11-2	18-381000-14	BREAK-TIP RH DE-ICE BOOT	1	4.5
5	23S-2081-2-1	18-3811000-7	HORIZONTAL STABILIZER LH/RH DE-ICE BOOT	2	3.3
6	23S-2081-13-1	18-381000-15	VERTICAL STABILIZER LH DE-ICE BOOT	1	1.3
7	23S-2081-13-2	18-381000-16	VERTICAL STABILIZER RH DE-ICE BOOT	1	1.3

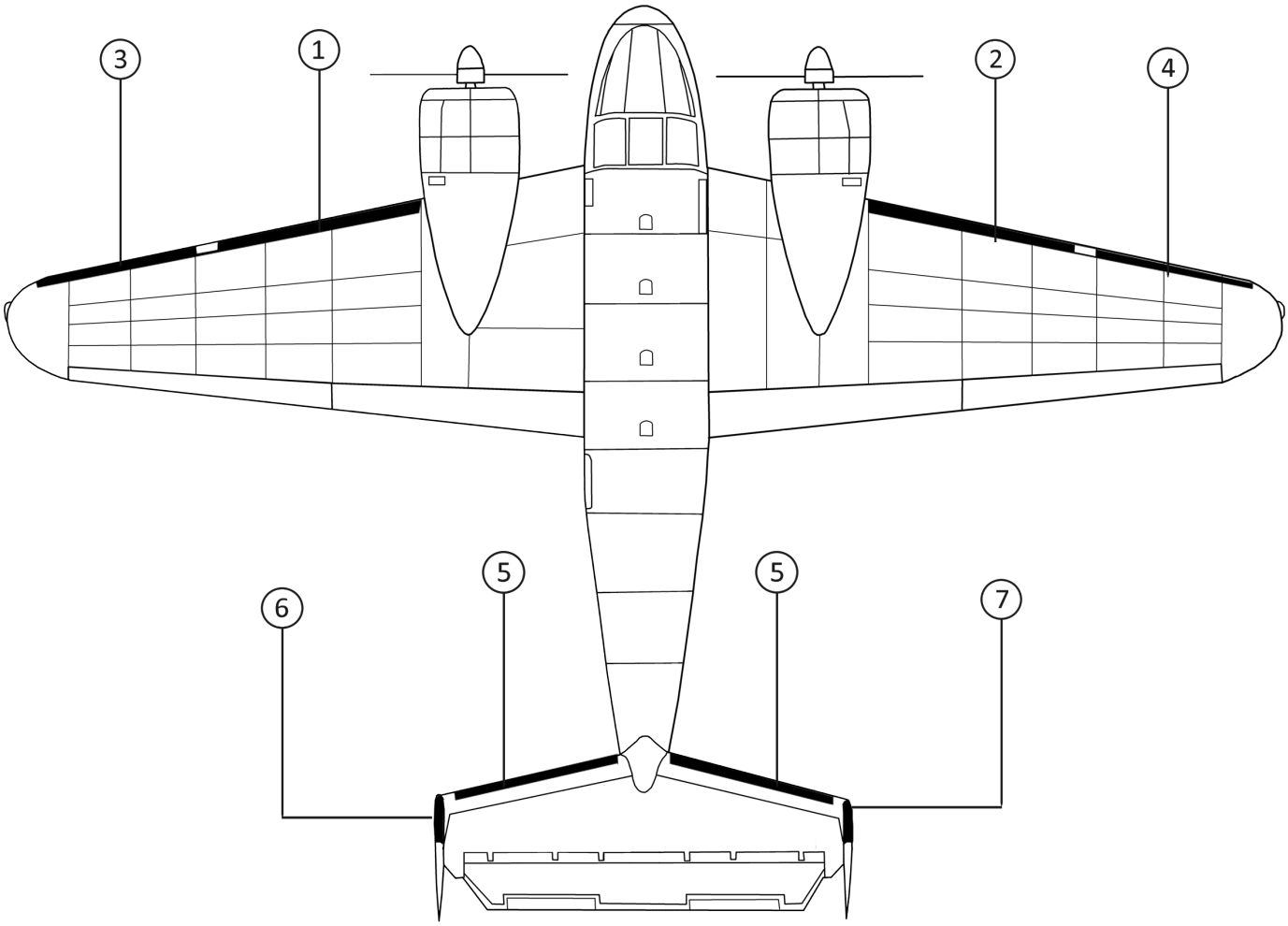

BEECHCRAFT D18C (TWIN BEECH) (WITH LIGHT)

BEECHCRAFT D18C (TWIN BEECH) (WITHOUT LIGHT)

BEECHCRAFT D18C (TWIN BEECH) (WITHOUT LIGHT)

STANDARD DE-ICE BOOTS

POSITION ID	GOODRICH PART NUMBER	AIRCRAFT OEM P/N	DESCRIPTION	QTY PER AIRCRAFT	WT
1	23S-2081-9-1	18-381000-9	NACELLE-BREAK LH DE-ICE BOOT	1	2.2
2	23S-2081-9-2	18-381000-10	NACELLE-BREAK RH DE-ICE BOOT	1	2.2
3	23S-2081-10-1	18-381000-11	BREAK-TIP LH DE-ICE BOOT	1	5.1
4	23S-2081-10-2	18-381000-12	BREAK-TIP RH DE-ICE BOOT	1	5.1
5	23S-2081-2-1	18-3811000-7	HORIZONTAL STABILIZER LH/RH DE-ICE BOOT	2	3.3
6	23S-2081-13-1	18-381000-15	VERTICAL STABILIZER LH DE-ICE BOOT	1	1.3
7	23S-2081-13-2	18-381000-16	VERTICAL STABILIZER RH DE-ICE BOOT	1	1.3

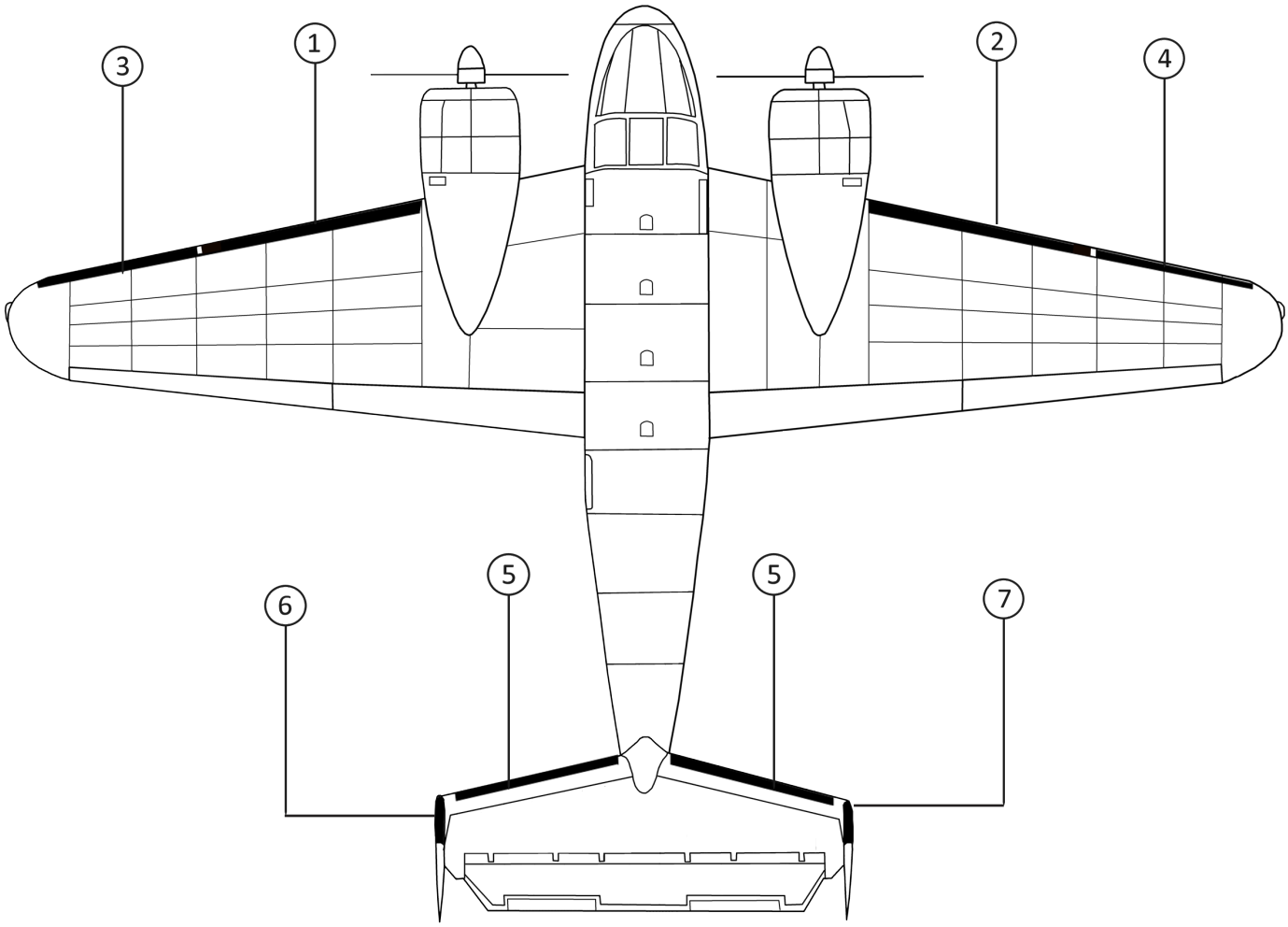

BEECHCRAFT D18S (TWIN BEECH) (WITH LIGHT)

STANDARD DE-ICE BOOTS

POSITION ID	GOODRICH PART NUMBER	AIRCRAFT OEM P/N	DESCRIPTION	QTY PER AIRCRAFT	WT
1	23S-2081-9-1	18-381000-9	NACELLE-BREAK LH DE-ICE BOOT	1	2.2
2	23S-2081-9-2	18-381000-10	NACELLE-BREAK RH DE-ICE BOOT	1	2.2
3	23S-2081-11-1	18-381000-13	BREAK-TIP LH DE-ICE BOOT	1	4.5
4	23S-2081-11-2	18-381000-14	BREAK-TIP RH DE-ICE BOOT	1	4.5
5	23S-2081-2-1	18-3811000-7	HORIZONTAL STABILIZER LH/RH DE-ICE BOOT	2	3.3
6	23S-2081-13-1	18-381000-15	VERTICAL FIN LH DE-ICE BOOT	1	1.3
7	23S-2081-13-2	18-381000-16	VERTICAL FIN RH DE-ICE BOOT	1	1.3

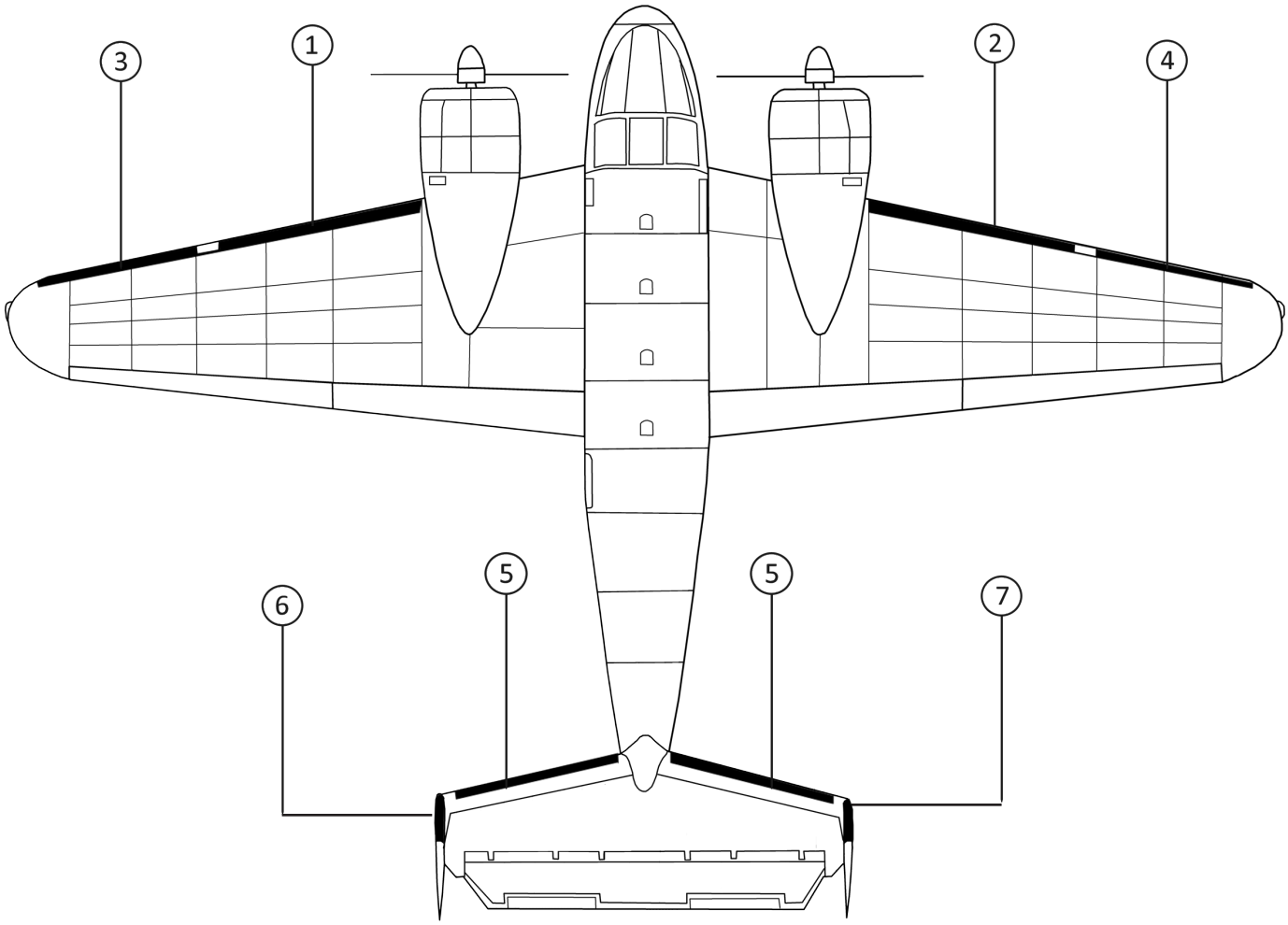

BEECHCRAFT D18S (TWIN BEECH) (WITHOUT LIGHT)

BEECHCRAFT D18S (TWIN BEECH) (WITHOUT LIGHT)

STANDARD DE-ICE BOOTS

POSITION ID	GOODRICH PART NUMBER	AIRCRAFT OEM P/N	DESCRIPTION	QTY PER AIRCRAFT	WT
1	23S-2081-9-1	18-381000-9	NACELLE-BREAK LH DE-ICE BOOT	1	2.2
2	23S-2081-9-2	18-381000-10	NACELLE-BREAK RH DE-ICE BOOT	1	2.2
3	23S-2081-10-1	18-381000-11	BREAK-TIP LH DE-ICE BOOT	1	5.1
4	23S-2081-10-2	18-381000-12	BREAK-TIP RH DE-ICE BOOT	1	5.1
5	23S-2081-2-1	18-3811000-7	HORIZONTAL STABILIZER LH/RH DE-ICE BOOT	2	3.3
6	23S-2081-13-1	18-381000-15	VERTICAL STABILIZER LH DE-ICE BOOT	1	1.3
7	23S-2081-13-2	18-381000-16	VERTICAL STABILIZER RH DE-ICE BOOT	1	1.3

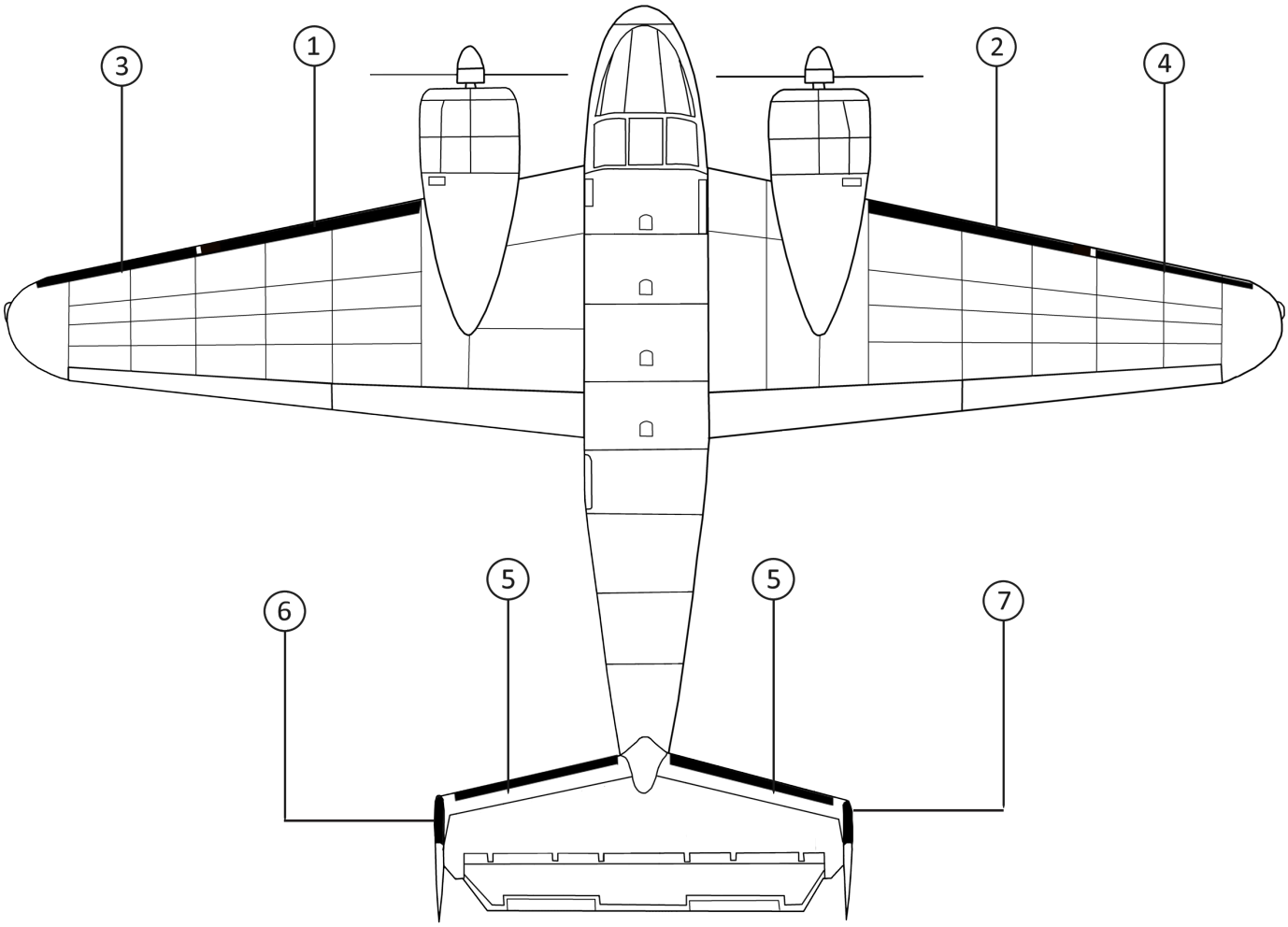

BEECHCRAFT E18S (TWIN BEECH) (WITH LIGHT)

STANDARD DE-ICE BOOTS

POSITION ID	GOODRICH PART NUMBER	AIRCRAFT OEM P/N	DESCRIPTION	QTY PER AIRCRAFT	WT
1	23S-2081-9-1	18-381000-9	NACELLE-BREAK LH DE-ICE BOOT	1	2.2
2	23S-2081-9-2	18-381000-10	NACELLE-BREAK RH DE-ICE BOOT	1	2.2
3	23S-2081-8-1		LIGHT-TIP LH DE-ICE BOOT	1	5.6
4	23S-2081-8-2		LIGHT-TIP RH DE-ICE BOOT	1	5.6
5	23S-2081-2-1	18-3811000-7	HORIZONTAL STABILIZER LH/RH DE-ICE BOOT	2	3.3
6	23S-2081-13-1	18-381000-15	VERTICAL STABILIZER LH DE-ICE BOOT	1	1.3
7	23S-2081-13-2	18-381000-16	VERTICAL STABILIZER RH DE-ICE BOOT	1	1.3

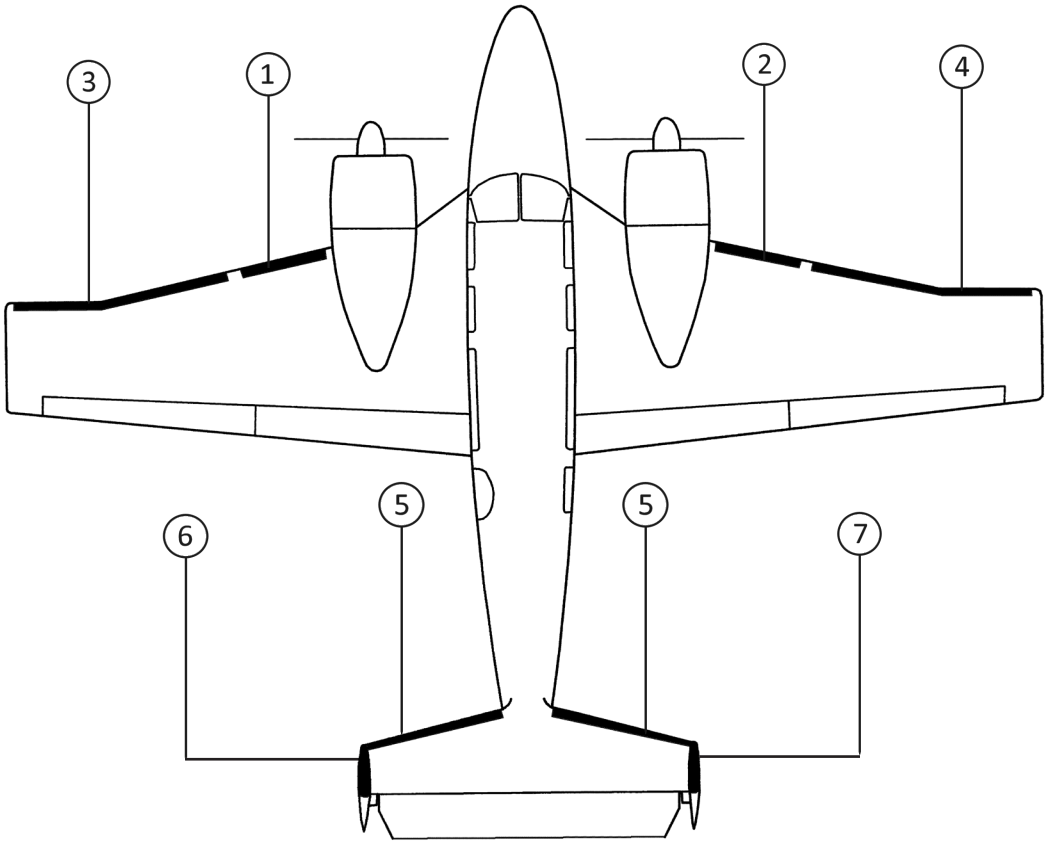

BEECHCRAFT E18S (TWIN BEECH) (WITHOUT LIGHT)

STANDARD DE-ICE BOOTS

POSITION ID	GOODRICH PART NUMBER	AIRCRAFT OEM P/N	DESCRIPTION	QTY PER AIRCRAFT	WT
1	23S-2081-9-1	18-381000-9	NACELLE-BREAK LH DE-ICE BOOT	1	2.2
2	23S-2081-9-2	18-381000-10	NACELLE-BREAK RH DE-ICE BOOT	1	2.2
3	23S-2081-10-1	18-381000-11	BREAK-TIP LH DE-ICE BOOT	1	5.1
4	23S-2081-10-2	18-381000-12	BREAK-TIP RH DE-ICE BOOT	1	5.1
5	23S-2081-2-1	18-3811000-7	HORIZONTAL STABILIZER LH/RH DE-ICE BOOT	2	3.3
6	23S-2081-13-1	18-381000-15	VERTICAL STABILZER LH DE-ICE BOOT	1	1.3
7	23S-2081-13-2	18-381000-16	VERTICAL STABILIZER RH DE-ICE BOOT	1	1.3

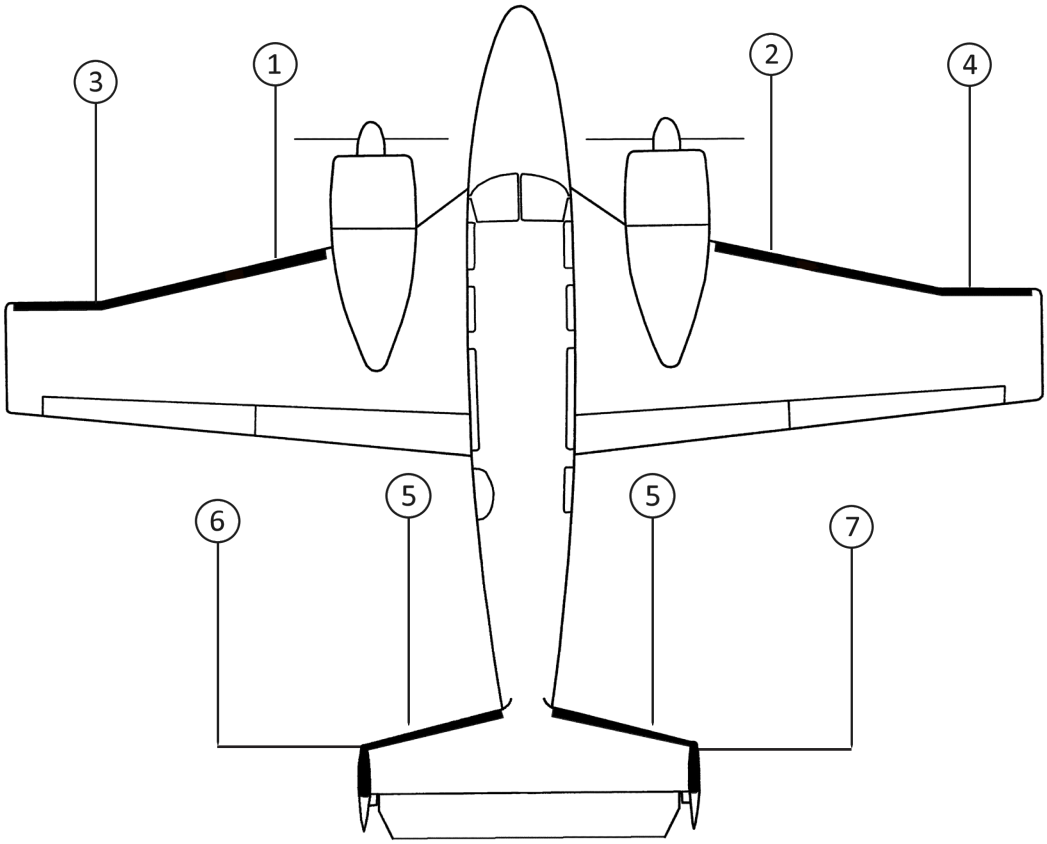

BEECHCRAFT E18S-9700 (TWIN BEECH)

STANDARD DE-ICE BOOTS

POSITION ID	GOODRICH PART NUMBER	AIRCRAFT OEM P/N	DESCRIPTION	QTY PER AIRCRAFT	WT
1	23S-2081-7-1		NACELLE-LIGHT LH DE-ICE BOOT	1	3.4
2	23S-2081-7-2		NACELLE-LIGHT RH DE-ICE BOOT	1	3.4
3	23S-2081-8-1		LIGHT-TIP LH DE-ICE BOOT	1	5.6
4	23S-2081-8-2		LIGHT-TIP RH DE-ICE BOOT	1	5.6
5	23S-2081-2-1	18-3811000-7	HORIZONTAL STABILIZER LH/RH DE-ICE BOOT	1	3.3
6	23S-2081-6-1		VERTICAL STABILIZER LH DE-ICE BOOT	1	1.3
7	23S-2081-6-2		VERTICAL STABILIZER RH DE-ICE BOOT	1	1.3

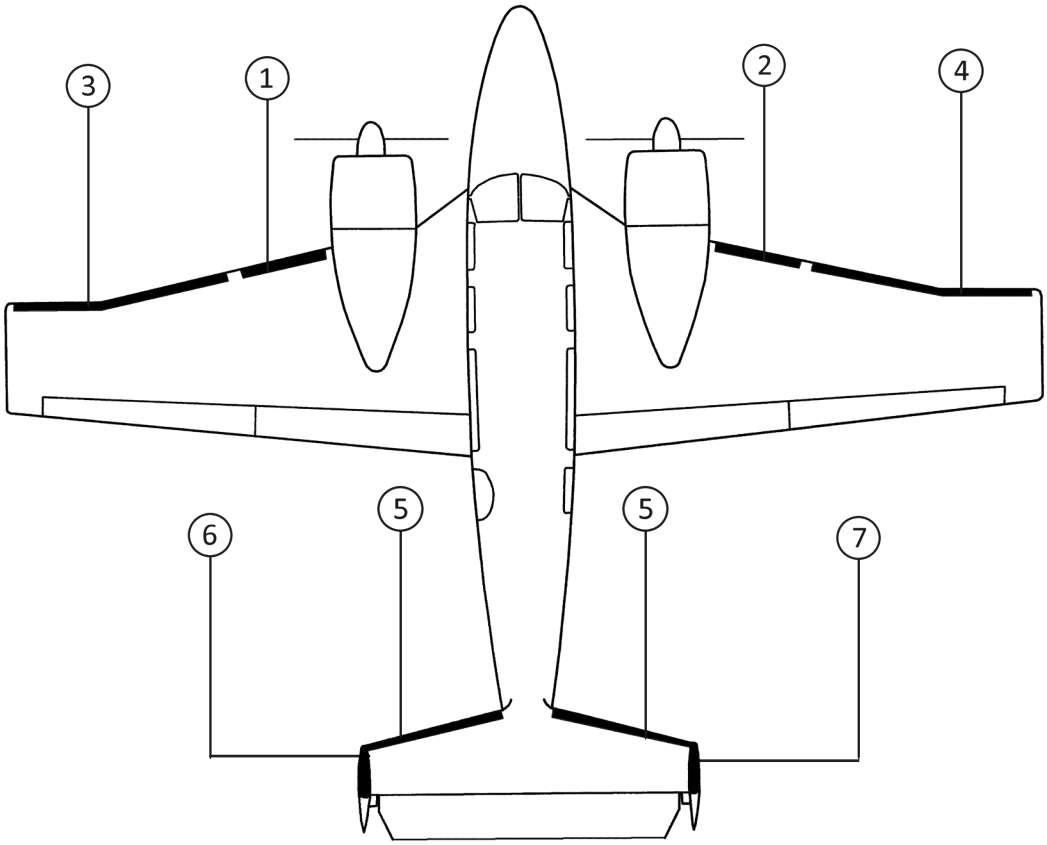

BEECHCRAFT H18 (TWIN BEECH) (WITH LIGHT)

STANDARD DE-ICE BOOTS

POSITION ID	GOODRICH PART NUMBER	AIRCRAFT OEM P/N	DESCRIPTION	QTY PER AIRCRAFT	WT
1	23S-2081-9-1	18-381000-9	NACELLE-BREAK LH DE-ICE BOOT	1	2.2
2	23S-2081-9-2	18-381000-10	NACELLE-BREAK RH DE-ICE BOOT	1	2.2
3	23S-2081-11-1	18-381000-13	BREAK-TIP LH DE-ICE BOOT	1	4.5
4	23S-2081-11-2	18-381000-14	BREAK-TIP RH DE-ICE BOOT	1	4.5
5	23S-2081-2-1	18-3811000-7	HORIZONTAL STABILIZER LH/RH DE-ICE BOOT	2	3.3
6	23S-2081-13-1	18-381000-15	VERTICAL STABILIZER LH DE-ICE BOOT	1	1.3
7	23S-2081-13-2	18-381000-16	VERTICAL STABILIZER RH DE-ICE BOOT	1	1.3

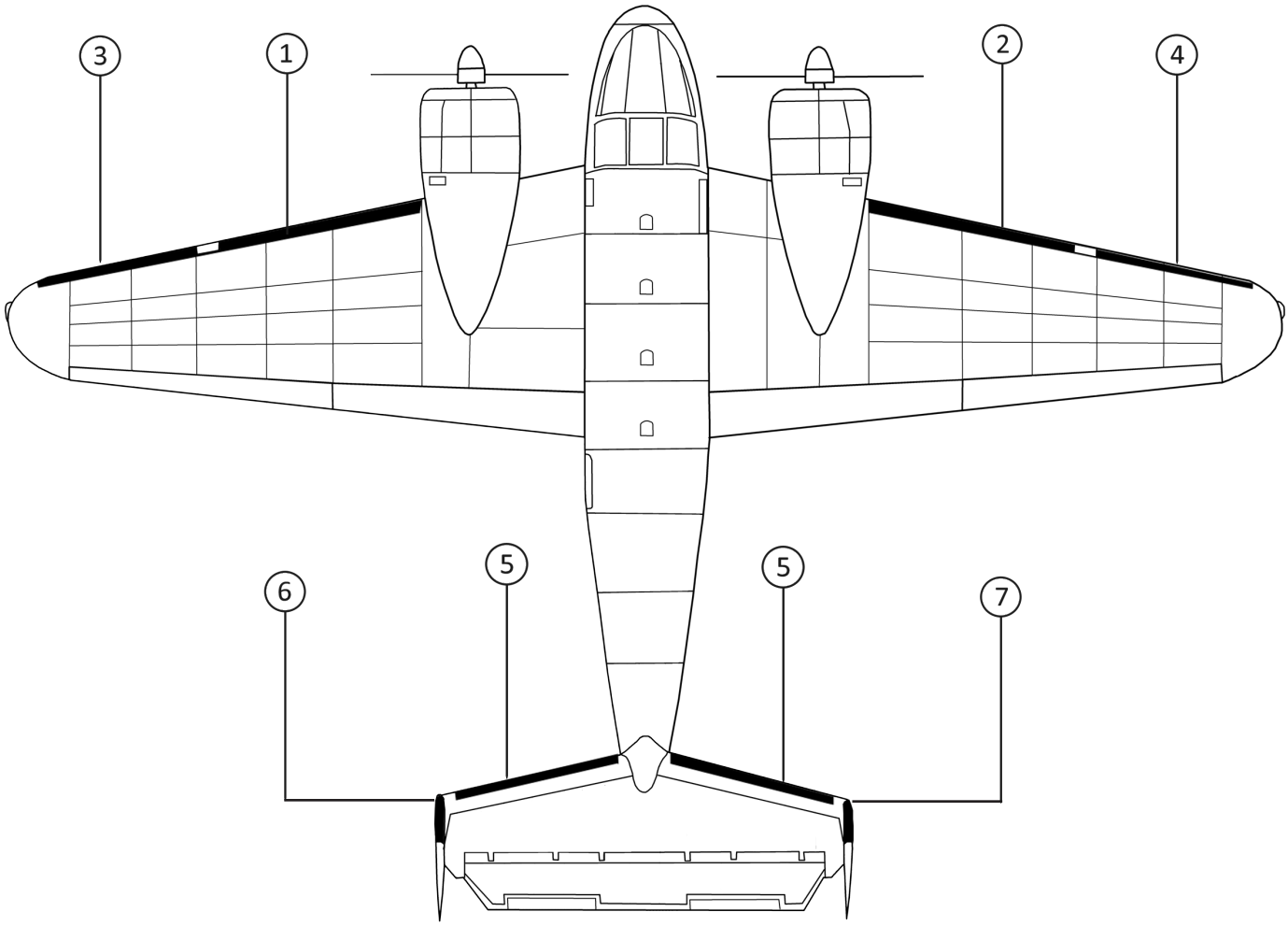

BEECHCRAFT H18 (TWIN BEECH) (WITHOUT LIGHT)

STANDARD DE-ICE BOOTS

POSITION ID	GOODRICH PART NUMBER	AIRCRAFT OEM P/N	DESCRIPTION	QTY PER AIRCRAFT	WT
1	23S-2081-9-1	18-381000-9	NACELLE-BREAK LH DE-ICE BOOT	1	2.2
2	23S-2081-9-2	18-381000-10	NACELLE-BREAK RH DE-ICE BOOT	1	2.2
3	23S-2081-10-1	18-381000-11	BREAK-TIP LH DE-ICE BOOT	1	5.1
4	23S-2081-10-2	18-381000-12	BREAK-TIP RH DE-ICE BOOT	1	5.1
5	23S-2081-2-1	18-3811000-7	HORIZONTAL STABILIZER LH/RH DE-ICE BOOT	2	3.3
6	23S-2081-13-1	18-381000-15	VERTICAL STABILIZER LH DE-ICE BOOT	1	1.3
7	23S-2081-13-2	18-381000-16	VERTICAL STABILIZER RH DE-ICE BOOT	1	1.3

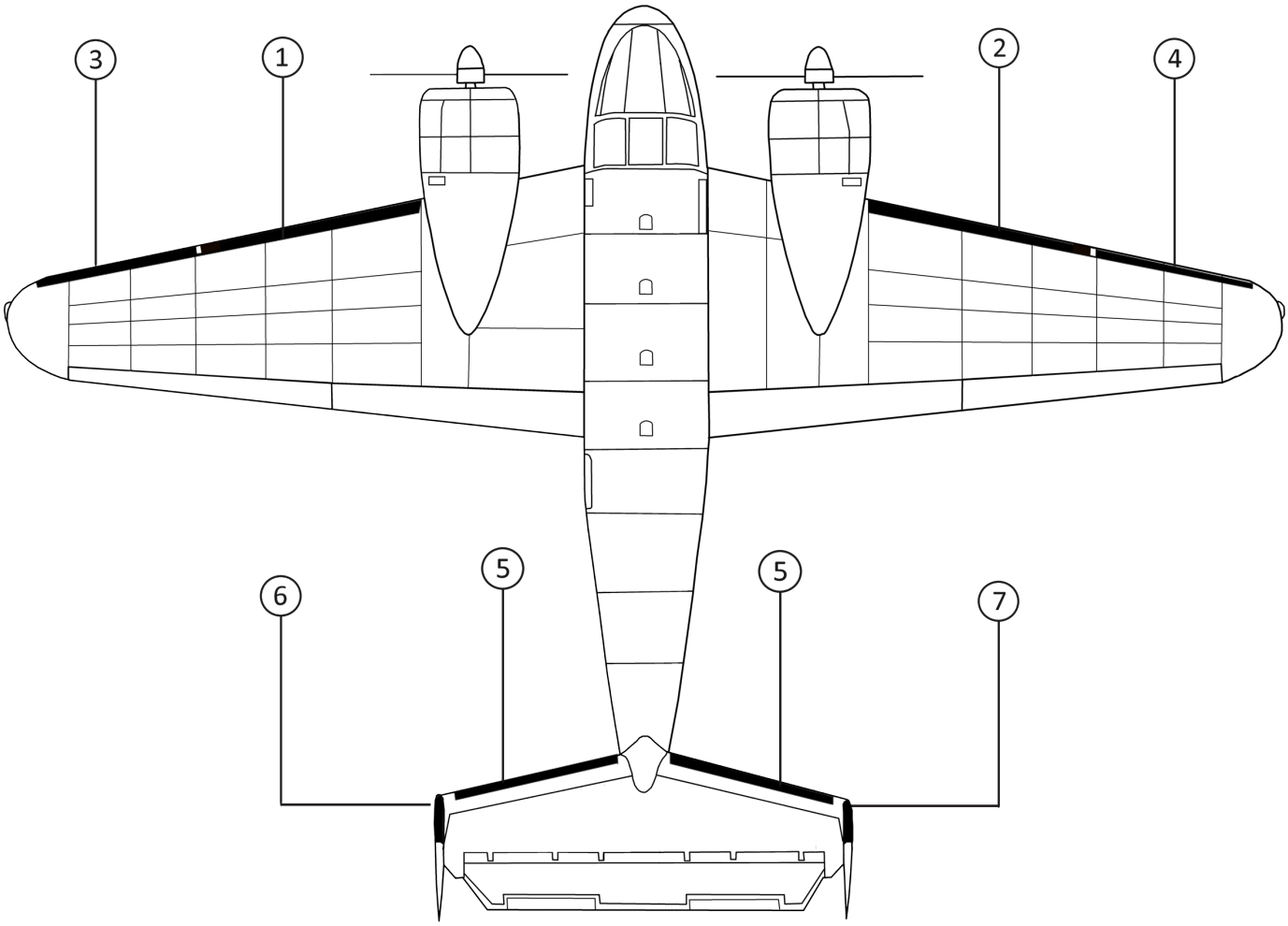

BEECHCRAFT 36 (BONANZA)

STANDARD DE-ICE BOOTS

POSITION ID	GOODRICH PART NUMBER	AIRCRAFT OEM P/N	DESCRIPTION	QTY PER AIRCRAFT	WT
1	25S-5D5129-01		WING LH DE-ICE BOOT	1	3.9
2	25S-5D5129-02		WING RH DE-ICE BOOT	1	3.9
3	25S-5D5129-03		HORIZONTAL STABILIZER LH DE-ICE BOOT	1	1.5
4	25S-5D5129-04		HORIZONTAL STABILIZER RH DE-ICE BOOT	1	1.5

OPTIONAL STANDARD DE-ICE BOOTS

POSITION ID	GOODRICH PART NUMBER	AIRCRAFT OEM P/N	DESCRIPTION	QTY PER AIRCRAFT	WT
1	25S-5D5129-05		WING LH DE-ICE BOOT (WINGS WITH VOR-TEX GENERATORS)	1	4.8
2	25S-5D5129-06		WING RH DE-ICE BOOT (WINGS WITH VORTEX GENERATORS)	1	4.8

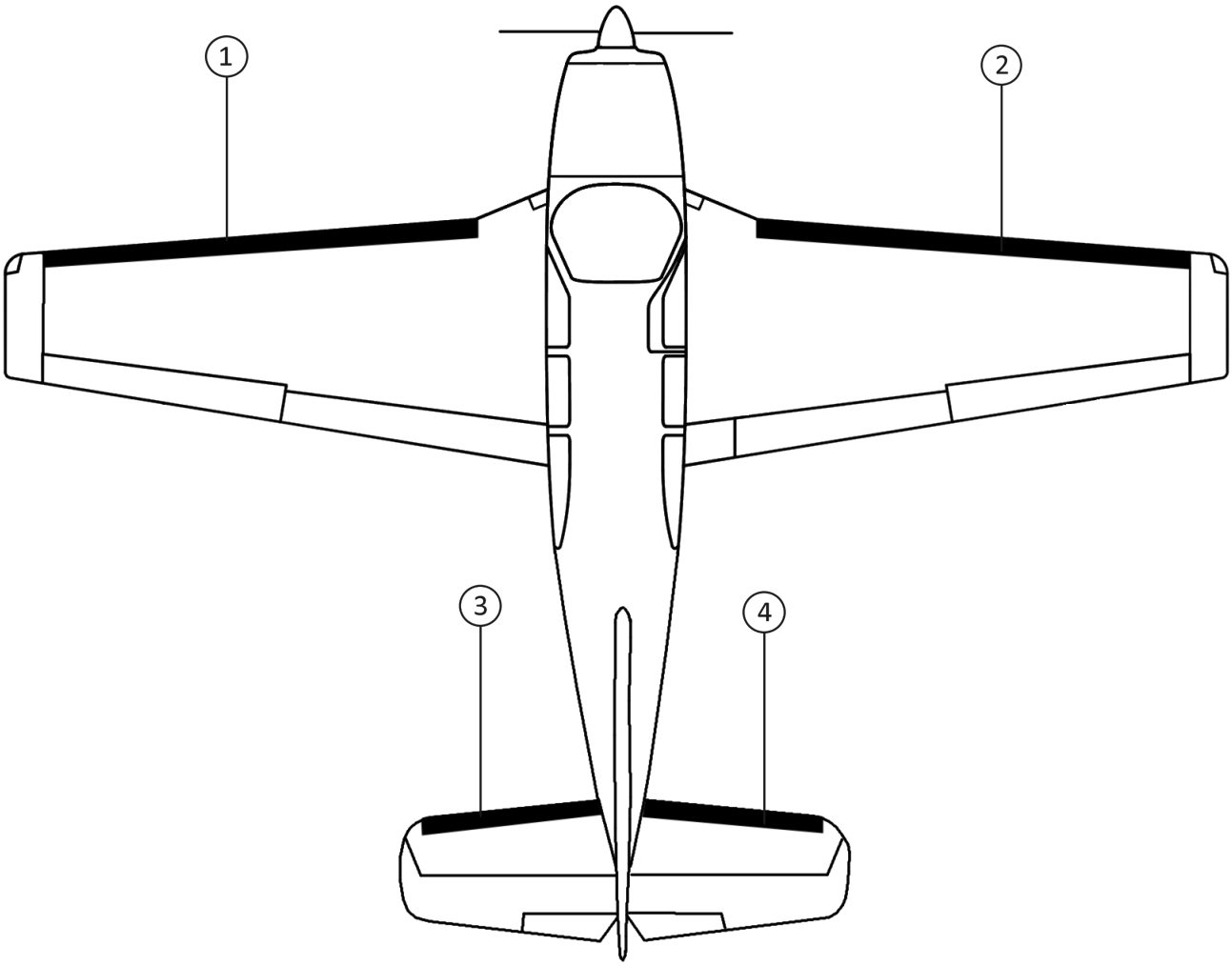

BEECHCRAFT A36 (BONANZA)

STANDARD DE-ICE BOOTS

POSITION ID	GOODRICH PART NUMBER	AIRCRAFT OEM P/N	DESCRIPTION	QTY PER AIRCRAFT	WT
1	25S-5D5129-01		WING LH DE-ICE BOOT	1	3.9
2	25S-5D5129-02		WING RH DE-ICE BOOT	1	3.9
3	25S-5D5129-03		HORIZONTAL STABILIZER LH DE-ICE BOOT	1	1.5
4	25S-5D5129-04		HORIZONTAL STABILIZER RH DE-ICE BOOT	1	1.5

OPTIONAL STANDARD DE-ICE BOOTS

POSITION ID	GOODRICH PART NUMBER	AIRCRAFT OEM P/N	DESCRIPTION	QTY PER AIRCRAFT	WT
1	25S-5D5129-05		WING LH DE-ICE BOOT (WINGS WITH VOR-TEX GENERATORS)	1	4.8
2	25S-5D5129-06		WING RH DE-ICE BOOT (WINGS WITH VORTEX GENERATORS)	1	4.8

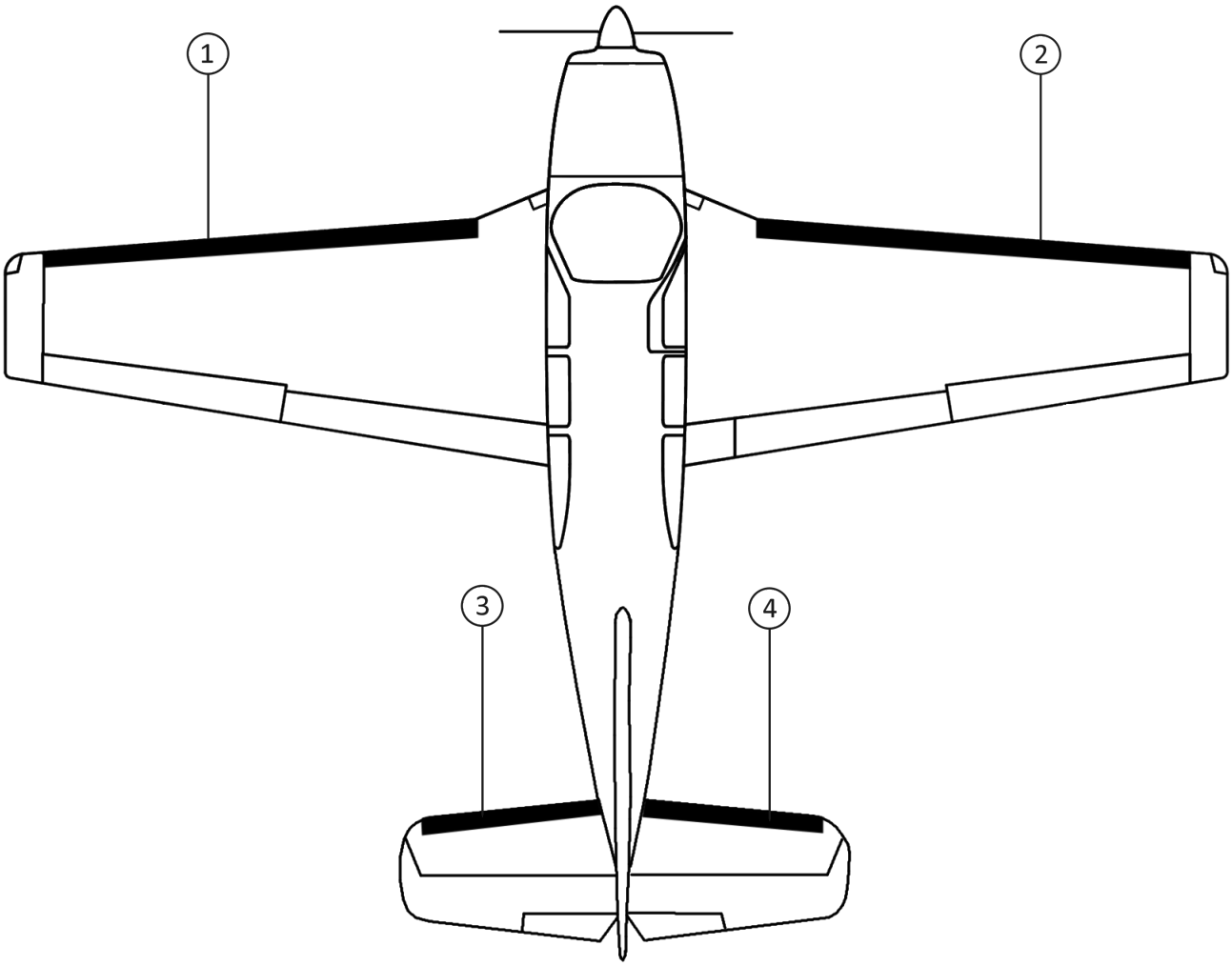

BEECHCRAFT A36TC (BONANZA)

STANDARD DE-ICE BOOTS

POSITION ID	GOODRICH PART NUMBER	AIRCRAFT OEM P/N	DESCRIPTION	QTY PER AIRCRAFT	WT
1	25S-5D5129-01		WING LH DE-ICE BOOT	1	3.9
2	25S-5D5129-02		WING RH DE-ICE BOOT	1	3.9
3	25S-5D5129-03		HORIZONTAL STABILIZER LH DE-ICE BOOT	1	1.5
4	25S-5D5129-04		HORIZONTAL STABILIZER RH DE-ICE BOOT	1	1.5

OPTIONAL STANDARD DE-ICE BOOTS

POSITION ID	GOODRICH PART NUMBER	AIRCRAFT OEM P/N	DESCRIPTION	QTY PER AIRCRAFT	WT
1	25S-5D5129-05		WING LH DE-ICE BOOT (WINGS WITH VOR-TEX GENERATORS)	1	4.8
2	25S-5D5129-06		WING RH DE-ICE BOOT (WINGS WITH VORTEX GENERATORS)	1	4.8

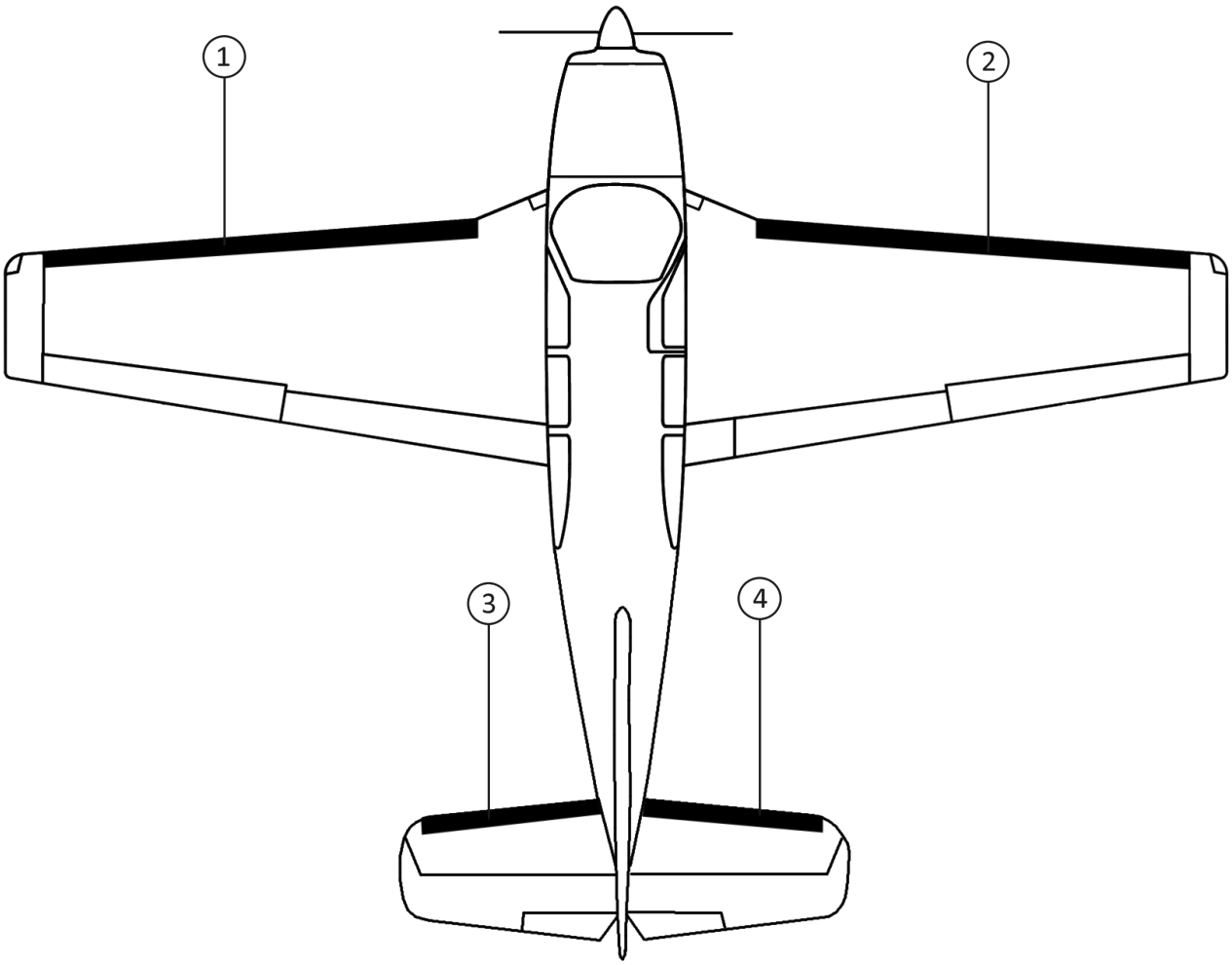

BEECHCRAFT 95-55 (BARON)

STANDARD DE-ICE BOOTS

POSITION ID	GOODRICH PART NUMBER	AIRCRAFT OEM P/N	DESCRIPTION	QTY PER AIRCRAFT	WT
1	23S-2004-12-1		NACELLE-LIGHT LH DE-ICE BOOT W/O OPTIONAL FUEL TANK	1	2.0
2	23S-2004-12-2		NACELLE-LIGHT RH DE-ICE BOOT W/O OPTIONAL FUEL TANK	1	2.0
3	23S-2004-2-1		LIGHT-TIP LH DE-ICE BOOT	1	3.6
4	23S-2004-2-2		LIGHT-TIP RH DE-ICE BOOT	1	3.8
5	23S-2004-5-1		HORIZONTAL STABILIZER LH DE-ICE BOOT	1	2.8
6	23S-2004-5-2		HORIZONTAL STABILIZER RH DE-ICE BOOT	1	2.8
7	23S-2004-7-1		VERTICAL STABILIZER DE-ICE BOOT	1	2.3

OPTIONAL STANDARD DE-ICE BOOTS

POSITION ID	GOODRICH PART NUMBER	AIRCRAFT OEM P/N	DESCRIPTION	QTY PER AIRCRAFT	WT
1	23S-2004-11-1		NACELLE-LIGHT LH DE-ICE BOOT W/OPTIONAL FUEL TANK	1	1.9
2	23S-2004-11-2		NACELLE-LIGHT RH DE-ICE BOOT W/OPTIONAL FUEL TANK	1	1.9

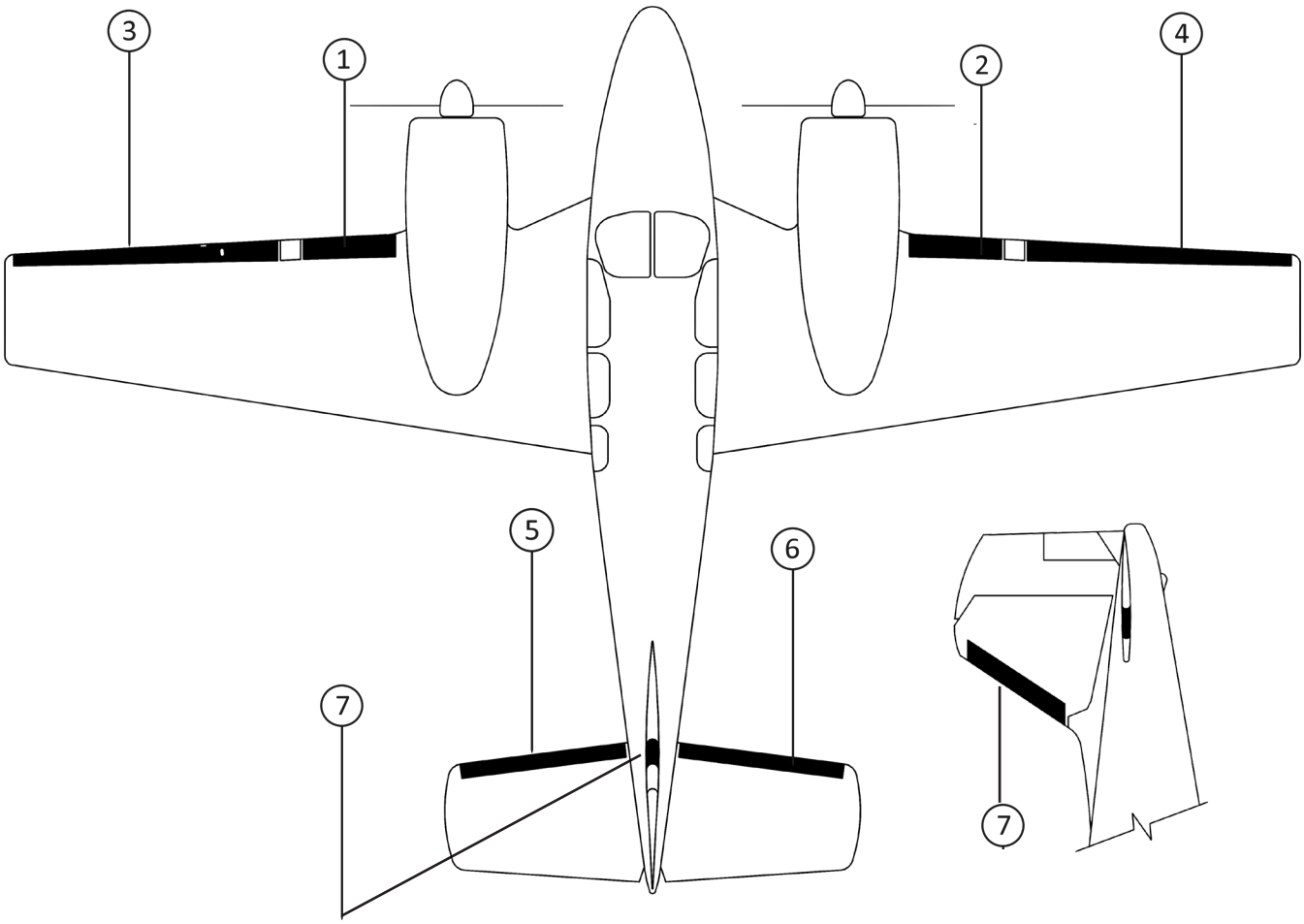

BEECHCRAFT 95-A55 (BARON)

STANDARD DE-ICE BOOTS

POSITION ID	GOODRICH PART NUMBER	AIRCRAFT OEM P/N	DESCRIPTION	QTY PER AIRCRAFT	WT
1	23S-2004-12-1		NACELLE-LIGHT LH DE-ICE BOOT W/O OPTIONAL FUEL TANK	1	2.0
2	23S-2004-12-2		NACELLE-LIGHT RH DE-ICE BOOT W/O OPTIONAL FUEL TANK	1	2.0
3	23S-2004-2-1		LIGHT-TIP LH DE-ICE BOOT	1	3.6
4	23S-2004-2-2		LIGHT-TIP RH DE-ICE BOOT	1	3.8
5	23S-2004-5-1		HORIZONTAL STABILIZER LH DE-ICE BOOT	1	2.8
6	23S-2004-5-2		HORIZONTAL STABILIZER RH DE-ICE BOOT	1	2.8
7	23S-2004-7-1		VERTICAL STABILIZER DE-ICE BOOT	1	2.3

OPTIONAL STANDARD DE-ICE BOOTS

POSITION ID	GOODRICH PART NUMBER	AIRCRAFT OEM P/N	DESCRIPTION	QTY PER AIRCRAFT	WT
1	23S-2004-11-1		NACELLE-LIGHT LH DE-ICE BOOT W/OPTIONAL FUEL TANK	1	1.9
2	23S-2004-11-2		NACELLE-LIGHT RH DE-ICE BOOT W/OPTIONAL FUEL TANK	1	1.9

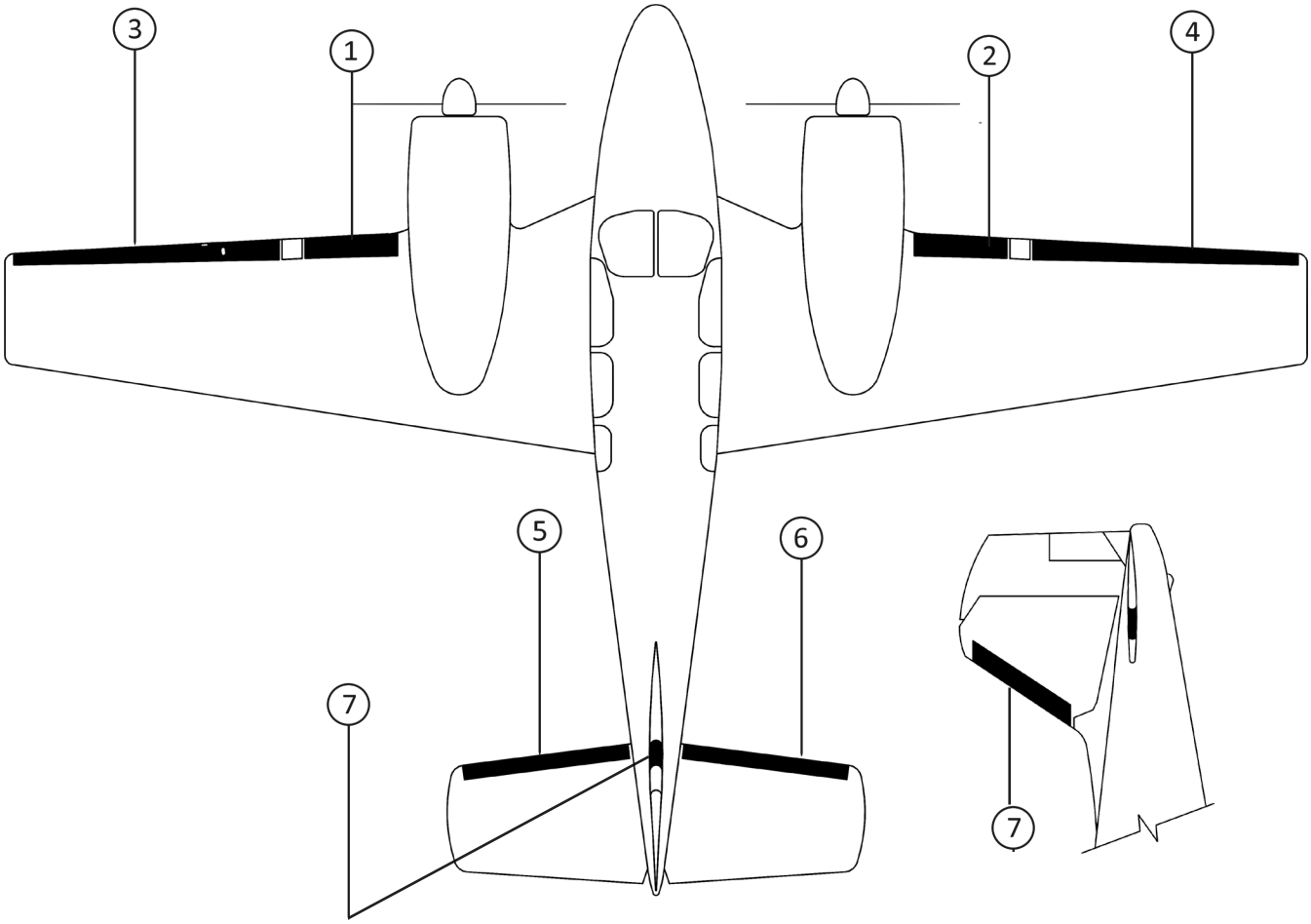

BEECHCRAFT 95-A55 (BARON) S/N TC-400 UP

STANDARD DE-ICE BOOTS

POSITION ID	GOODRICH PART NUMBER	AIRCRAFT OEM P/N	DESCRIPTION	QTY PER AIRCRAFT	WT
1	23S-2004-14-1		NACELLE-TIP LH DE-ICE BOOT	1	6.3
2	23S-2004-14-2		NACELLE-TIP RH DE-ICE BOOT	1	6.5
3	23S-2004-5-1		HORIZONTAL STABILIZER LH DE-ICE BOOT	1	2.8
4	23S-2004-5-2		HORIZONTAL STABILIZER RH DE-ICE BOOT	1	2.8
5	23S-2004-7-1		VERTICAL STABILIZER DE-ICE BOOT	1	2.3

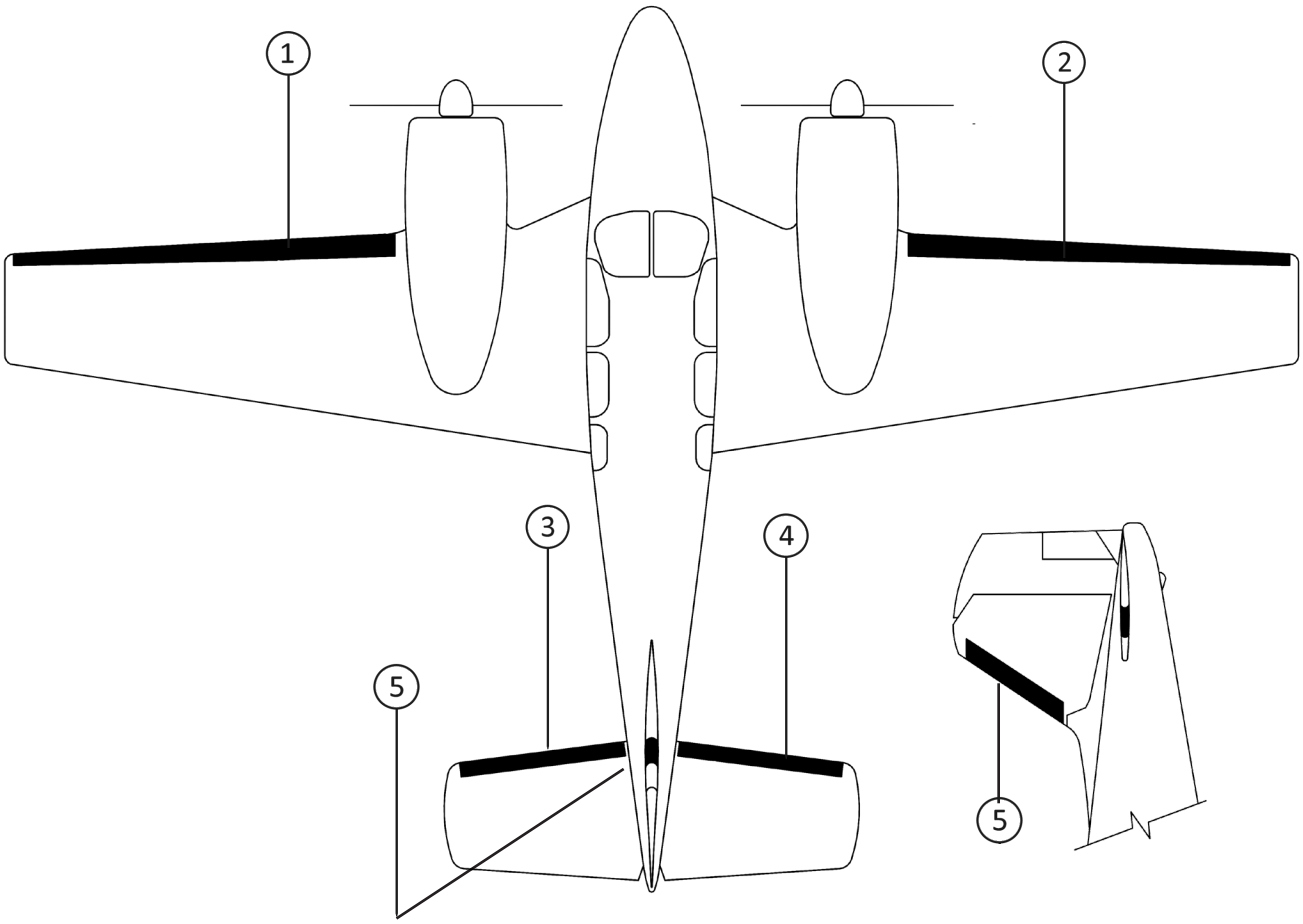

BEECHCRAFT 95-B55 (BARON) S/N TC-371

BEECHCRAFT 95-B55 (BARON) S/N TC-371

STANDARD DE-ICE BOOTS

POSITION ID	GOODRICH PART NUMBER	AIRCRAFT OEM P/N	DESCRIPTION	QTY PER AIRCRAFT	WT
1	23S-2004-12-1		NACELLE-LIGHT LH DE-ICE BOOT W/O OPTIONAL FUEL TANK	1	2.0
2	23S-2004-12-2		NACELLE-LIGHT RH DE-ICE BOOT W/O OPTIONAL FUEL TANK	1	2.0
3	23S-2004-2-1		LIGHT-TIP LH DE-ICE BOOT	1	3.6
4	23S-2004-2-2		LIGHT-TIP RH DE-ICE BOOT	1	3.8
5	23S-2004-5-1		HORIZONTAL STABILIZER LH DE-ICE BOOT	1	2.8
6	23S-2004-5-2		HORIZONTAL STABILIZER RH DE-ICE BOOT	1	2.8
7	23S-2004-7-1		VERTICAL STABILIZER DE-ICE BOOT	1	2.3

OPTIONAL STANDARD DE-ICE BOOTS

POSITION ID	GOODRICH PART NUMBER	AIRCRAFT OEM P/N	DESCRIPTION	QTY PER AIRCRAFT	WT
1	23S-2004-11-1		NACELLE-LIGHT LH DE-ICE BOOT W/OPTIONAL FUEL TANK	1	1.9
2	23S-2004-11-2		NACELLE-LIGHT RH DE-ICE BOOT W/OPTIONAL FUEL TANK	1	1.9

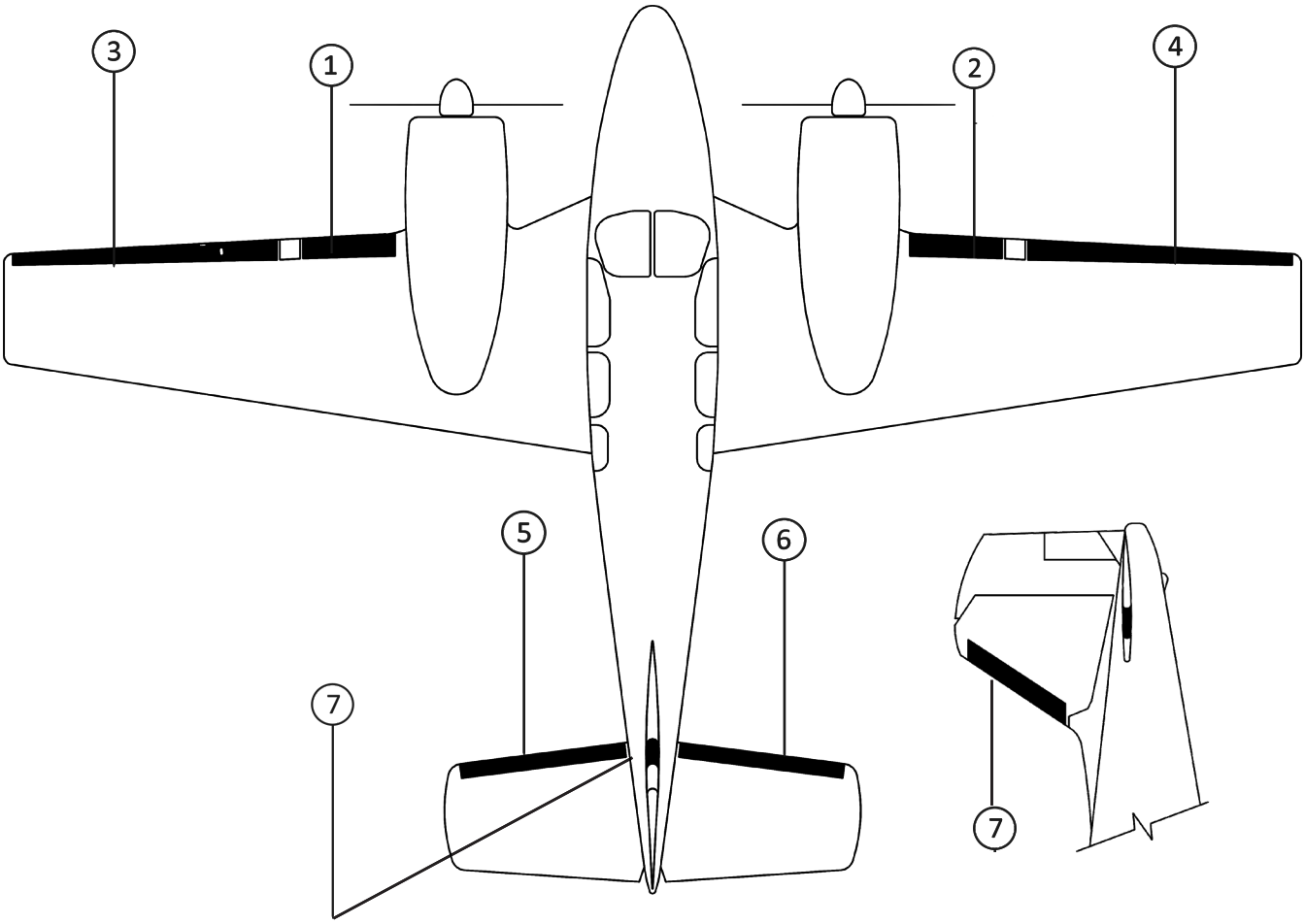

BEECHCRAFT 95-B55 (BARON) S/N TC-502 THRU TC-1607

STANDARD DE-ICE BOOTS

POSITION ID	GOODRICH PART NUMBER	AIRCRAFT OEM P/N	DESCRIPTION	QTY PER AIRCRAFT	WT
1	23S-2004-14-1		NACELLE-TIP LH DE-ICE BOOT	1	6.3
2	23S-2004-14-2		NACELLE-TIP RH DE-ICE BOOT	1	6.5
3	23S-2004-2-1		LIGHT-TIP LH DE-ICE BOOT	1	3.6
4	23S-2004-2-2		LIGHT-TIP RH DE-ICE BOOT	1	3.8
5	23S-2004-5-1		HORIZONTAL STABILIZER LH DE-ICE BOOT	1	2.8
6	23S-2004-5-2		HORIZONTAL STABILIZER RH DE-ICE BOOT	1	2.8
7	23S-2004-7-1		VERTICAL STABILIZER DE-ICE BOOT	1	2.3

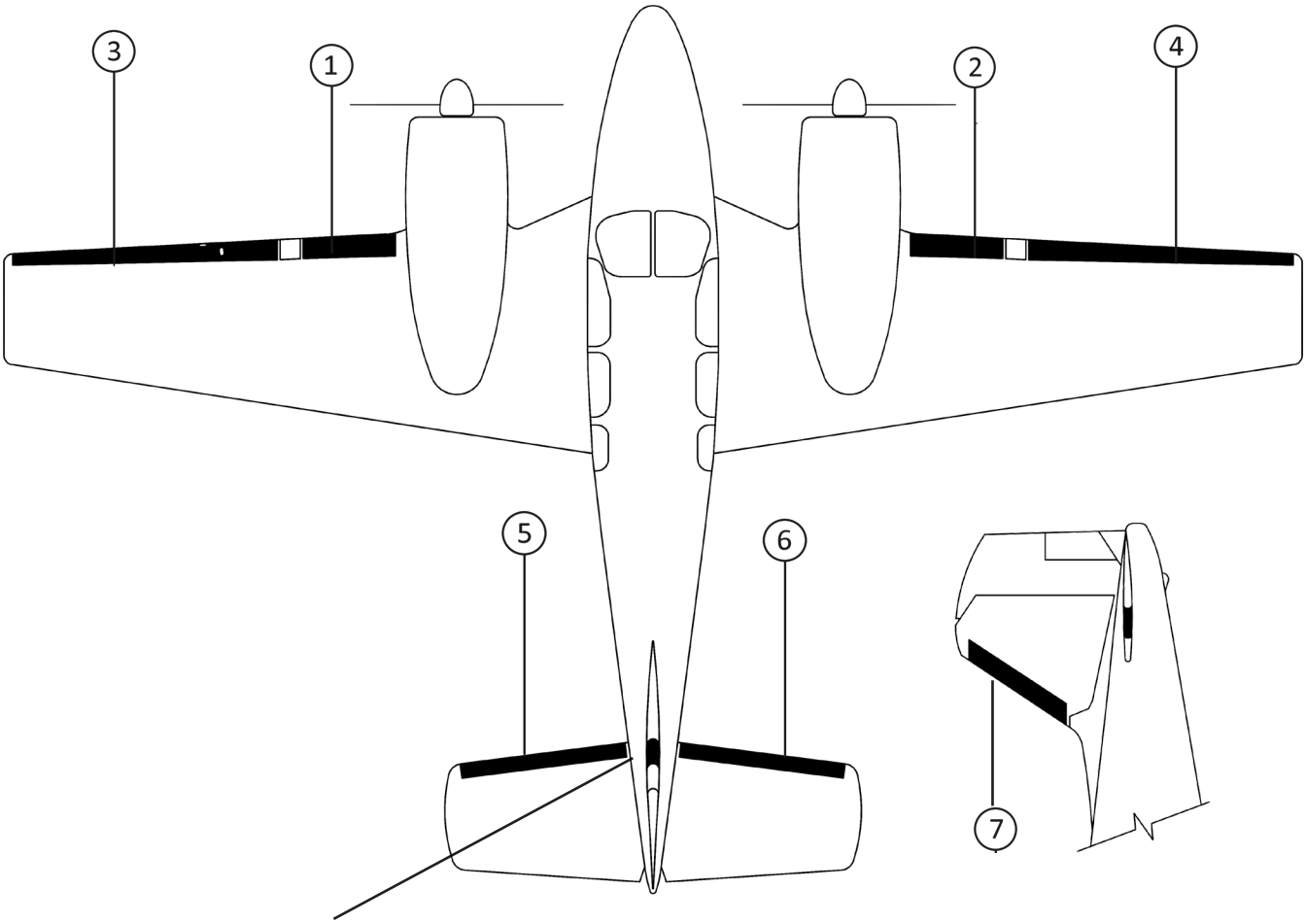

BEECHCRAFT 95-B55 (BARON) S/N TC-502 THRU TC-1607

De-ice boot care products

DE-ICER PATCHES AND PIN HOLE KITS ALSO AVAILABLE

Aerospace Protectant™ (32 fl. oz.) P/N 74-451-237-32

Goodrich® Aerospace Protectant™

- Approved for use on all Goodrich de-icers
- Near 100 percent prevention of UV-caused slow fade
- Resistance to dust, soiling and staining
- Water-based formula is environmentally friendly
- Apply as needed – no surface stripping required

Aerospace Cleaner™ (32 fl. oz.) P/N 74-451-238-32

Goodrich® Aerospace Cleaner™

- Approved for use on all Goodrich de-icers
- Can be used on all water-safe materials
- Water-based formula is environmentally friendly
- Apply as needed – no surface stripping required
- Great for removing dirt, grime and bugs

AgeMaster® #1 P/N 74-451-127

AgeMaster® #1

- Rubber preservative that protects against weathering, ozone and ultraviolet rays
- Apply six months after new de-icer is installed
- Reapply every 150 flight hours (twice yearly)
- One quart covers approximately 90 sq. ft. (8.3 sq. m.)

ICEX®II - 6oz
ICEX®II - Pump
ICEX®II - Quart

ICEX®II

- Ice adhesion inhibitor that enhances de-icer performance
- Apply every 50 flight hours during icing season
- One quart covers approximately 400 sq. ft. (37 sq. m)

ShineMaster™ Prep P/N 74-451-179
ShineMaster™ P/N 74-451-178

ShineMaster™

- Cosmetic coating that provides a high-luster shine
- Clean de-icer with ShineMaster Prep before applying 2-3 light coats
- One pint covers approximately 200 sq. ft. (18.6 sq. m)
- Reapply as desired

Specifications subject to change without notice.

BEECHCRAFT 95-C55 (BARON) S/N TE-1 UP

STANDARD DE-ICE BOOTS

POSITION ID	GOODRICH PART NUMBER	AIRCRAFT OEM P/N	DESCRIPTION	QTY PER AIRCRAFT	WT
1	23S-2004-14-1		NACELLE-TIP LH DE-ICE BOOT	1	6.3
2	23S-2004-14-2		NACELLE-TIP RH DE-ICE BOOT	1	6.5
3	23S-2004-5-1		HORIZONTAL STABILIZER LH DE-ICE BOOT	1	2.8
4	23S-2004-5-2		HORIZONTAL STABILIZER RH DE-ICE BOOT	1	2.8
5	23S-2004-7-1		VERTICAL STABILIZER DE-ICE BOOT	1	2.3

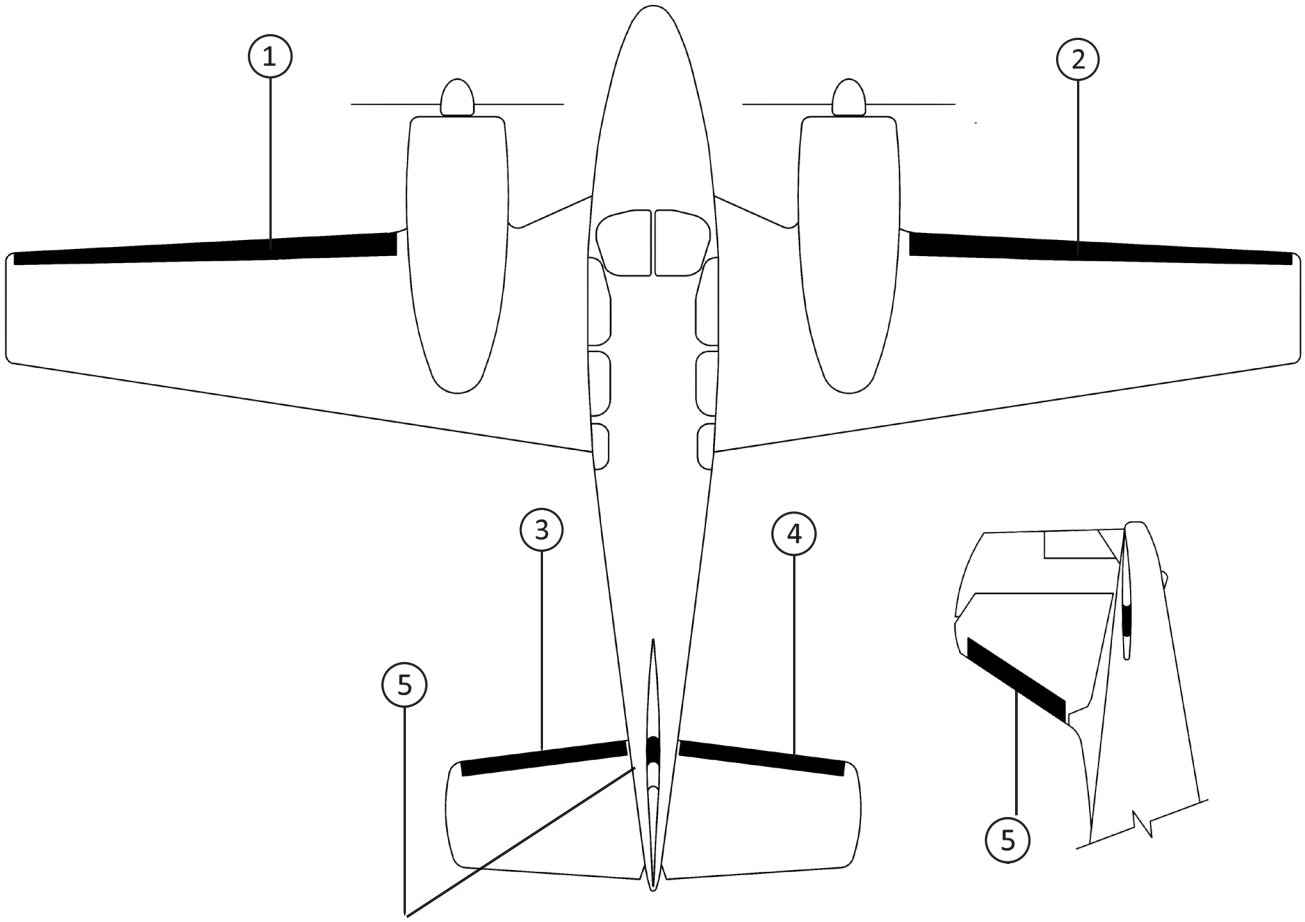

BEECHCRAFT 95-C55 (BARON) S/N TC-350

BEECHCRAFT 95-C55 (BARON) S/N TC-350

STANDARD DE-ICE BOOTS

POSITION ID	GOODRICH PART NUMBER	AIRCRAFT OEM P/N	DESCRIPTION	QTY PER AIRCRAFT	WT
1	23S-2004-12-1		NACELLE-LIGHT LH DE-ICE BOOT W/O OPTIONAL FUEL TANK	1	2.0
2	23S-2004-12-2		NACELLE-LIGHT RH DE-ICE BOOT W/O OPTIONAL FUEL TANK	1	2.0
3	23S-2004-2-1		LIGHT-TIP LH DE-ICE BOOT	1	3.6
4	23S-2004-2-2		LIGHT-TIP RH DE-ICE BOOT	1	3.8
5	23S-2004-5-1		HORIZONTAL STABILIZER LH DE-ICE BOOT	1	2.8
6	23S-2004-5-2		HORIZONTAL STABILIZER RH DE-ICE BOOT	1	2.8
7	23S-2004-7-1		VERTICAL STABILIZER DE-ICE BOOT	1	2.3

OPTIONAL STANDARD DE-ICE BOOTS

POSITION ID	GOODRICH PART NUMBER	AIRCRAFT OEM P/N	DESCRIPTION	QTY PER AIRCRAFT	WT
1	23S-2004-11-1		NACELLE-LIGHT LH DE-ICE BOOT W/OPTIONAL FUEL TANK	1	1.9
2	23S-2004-11-2		NACELLE-LIGHT RH DE-ICE BOOT W/OPTIONAL FUEL TANK	1	1.9

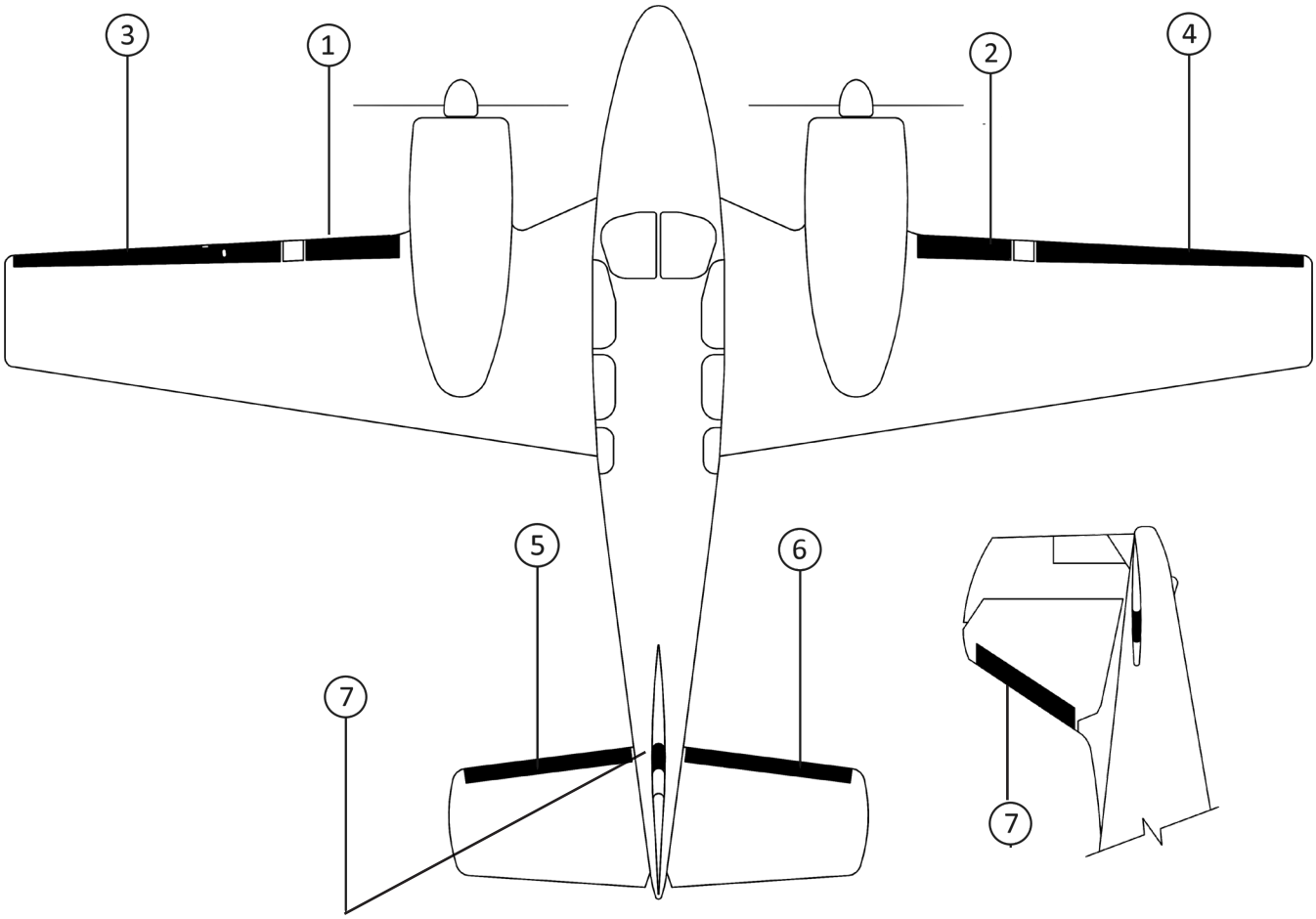

BEECHCRAFT 95-C55A (BARON)

STANDARD DE-ICE BOOTS

POSITION ID	GOODRICH PART NUMBER	AIRCRAFT OEM P/N	DESCRIPTION	QTY PER AIRCRAFT	WT
1	23S-2004-14-1		NACELLE-TIP LH DE-ICE BOOT	1	6.3
2	23S-2004-14-2		NACELLE-TIP RH DE-ICE BOOT	1	6.5
3	23S-2004-5-1		HORIZONTAL STABILIZER LH DE-ICE BOOT	1	2.8
4	23S-2004-5-2		HORIZONTAL STABILIZER RH DE-ICE BOOT	1	2.8
5	23S-2004-7-1		VERTICAL STABILIZER DE-ICE BOOT	1	2.3

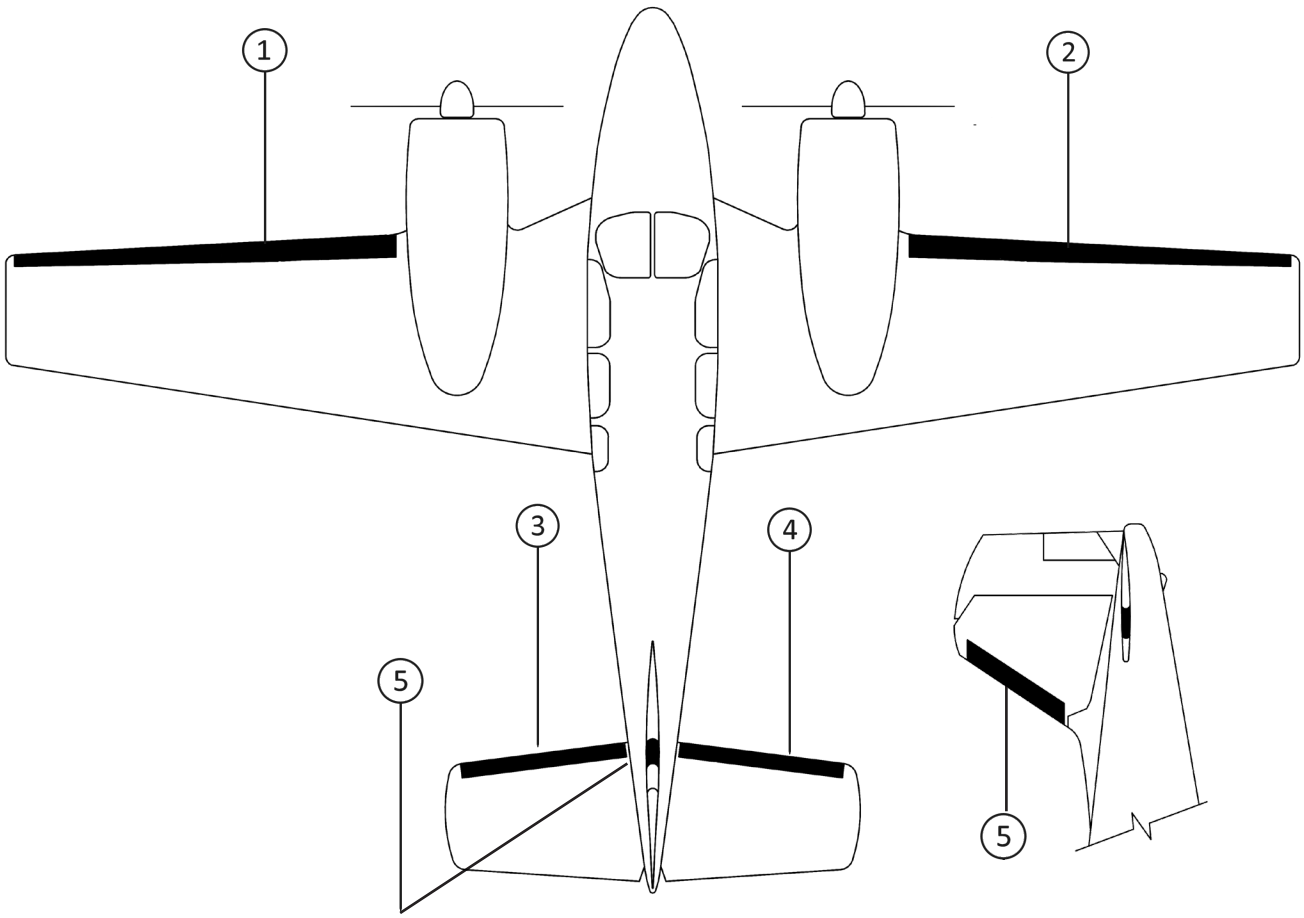

BEECHCRAFT D55 (BARON)

STANDARD DE-ICE BOOTS

POSITION ID	GOODRICH PART NUMBER	AIRCRAFT OEM P/N	DESCRIPTION	QTY PER AIRCRAFT	WT
1	23S-2004-14-1		NACELLE-TIP LH DE-ICE BOOT	1	6.3
2	23S-2004-14-2		NACELLE-TIP RH DE-ICE BOOT	1	6.5
3	23S-2004-15-1		HORIZONTAL STABILIZER LH DE-ICE BOOT	1	2.6
4	23S-2004-15-2		HORIZONTAL STABILIZER RH DE-ICE BOOT	1	2.6
5	23S-2004-7-1		VERTICAL STABILIZER DE-ICE BOOT	1	2.3

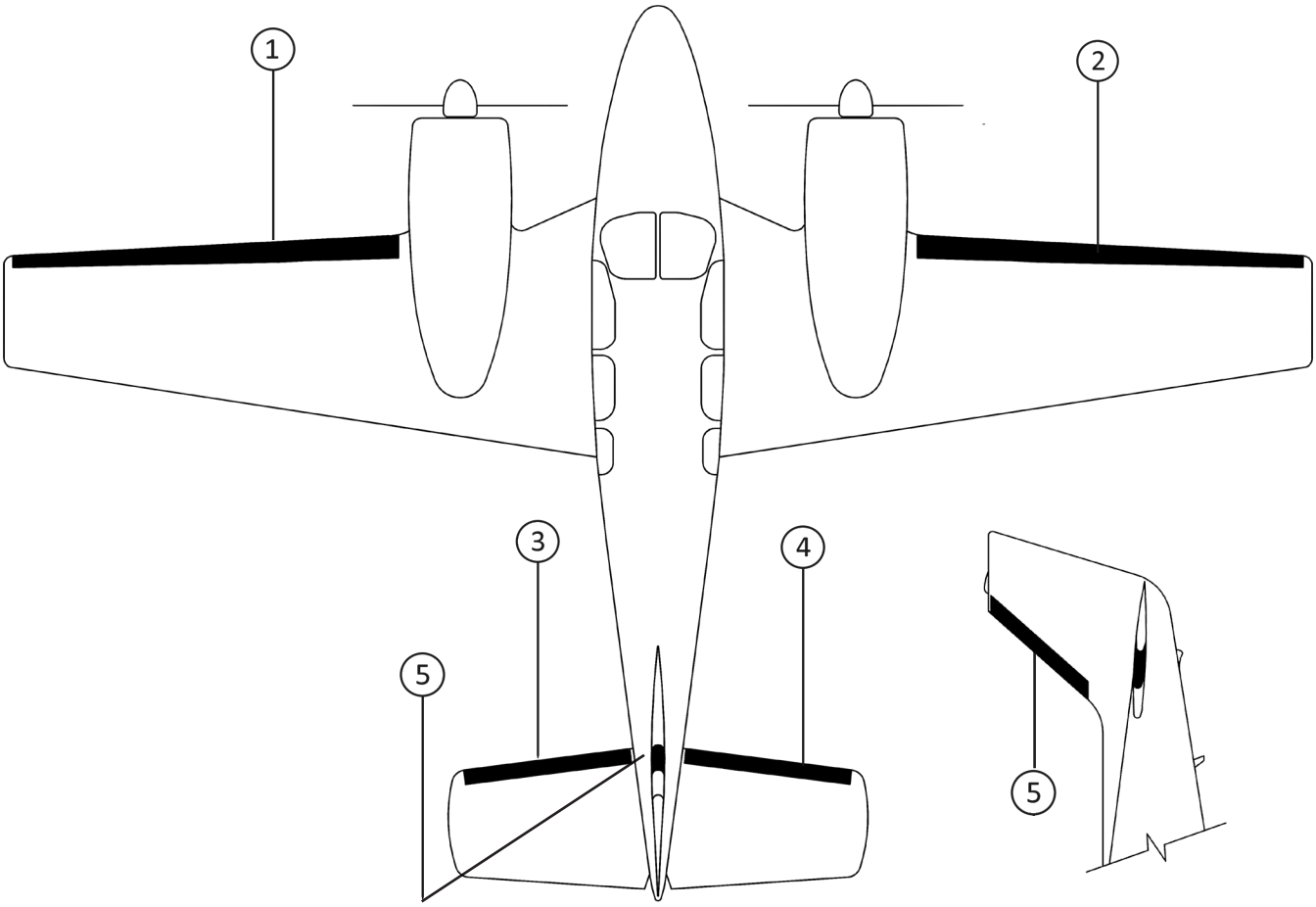

BEECHCRAFT D55A (BARON)

STANDARD DE-ICE BOOTS

POSITION ID	GOODRICH PART NUMBER	AIRCRAFT OEM P/N	DESCRIPTION	QTY PER AIRCRAFT	WT
1	23S-2004-14-1		NACELLE-TIP LH DE-ICE BOOT	1	6.3
2	23S-2004-14-2		NACELLE-TIP RH DE-ICE BOOT	1	6.5
3	23S-2004-5-1		HORIZONTAL STABILIZER LH DE-ICE BOOT	1	2.8
4	23S-2004-5-2		HORIZONTAL STABILIZER RH DE-ICE BOOT	1	2.8
5	23S-2004-7-1		VERTICAL STABILIZER DE-ICE BOOT	1	2.3

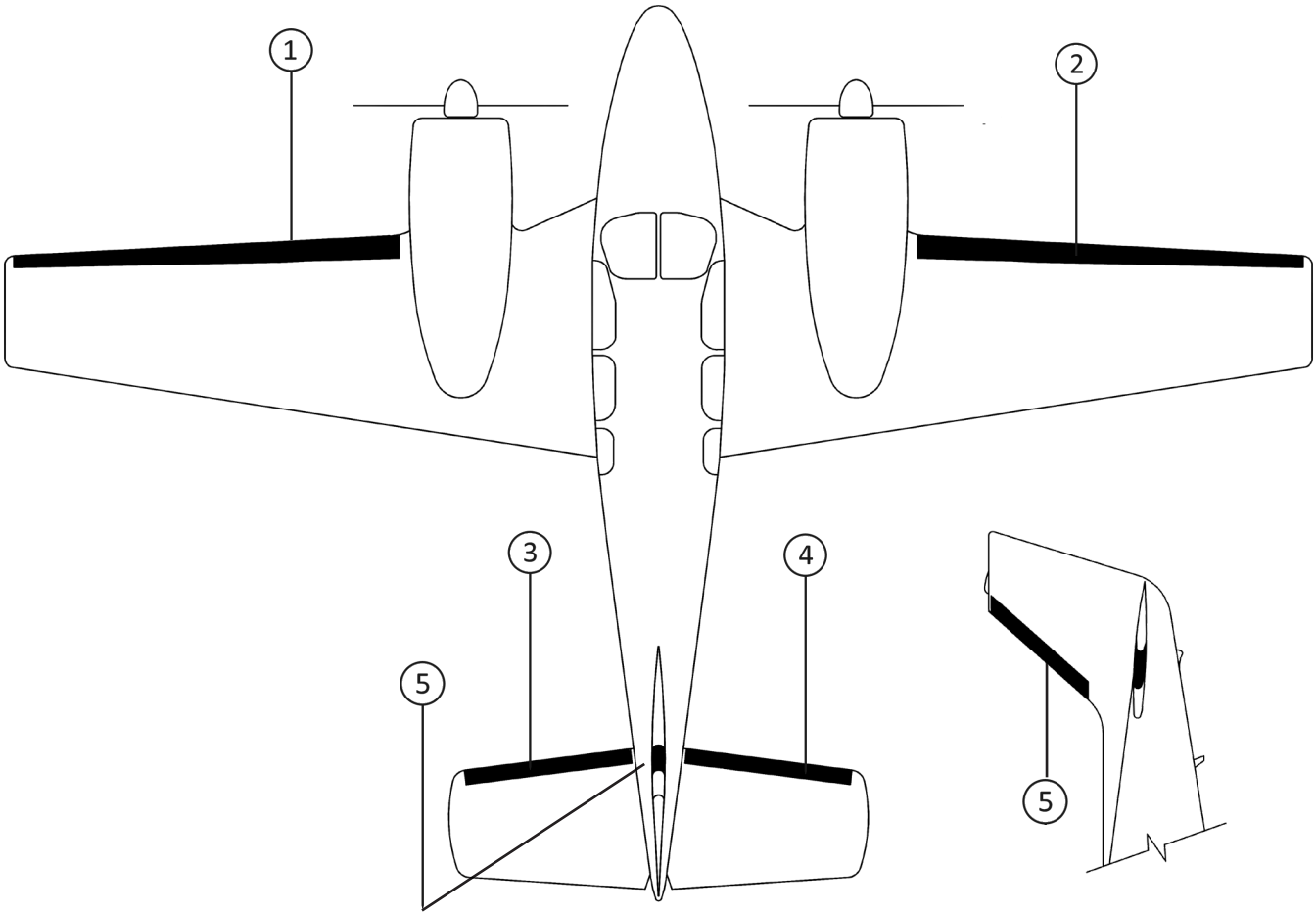

BEECHCRAFT E55 (BARON)

STANDARD DE-ICE BOOTS

POSITION ID	GOODRICH PART NUMBER	AIRCRAFT OEM P/N	DESCRIPTION	QTY PER AIRCRAFT	WT
1	25S-7D5057-01		NACELLE-TIP LH DE-ICE BOOT	1	4.0
2	25S-7D5057-02		NACELLE-TIP RH DE-ICE BOOT	1	4.0
3	25S-7D5057-07		HORIZONTAL STABILIZER LH DE-ICE BOOT	1	2.6
4	25S-7D5057-08		HORIZONTAL STABILIZER RH DE-ICE BOOT	1	2.6
5	25S-7D5057-09		VERTICAL STABILIZER DE-ICE BOOT	1	2.3

FASTboot® DE-ICE BOOTS

POSITION ID	GOODRICH PART NUMBER	AIRCRAFT OEM P/N	DESCRIPTION	QTY PER AIRCRAFT	WT
1	P25S-7D5057-01		FASTBOOT® WING LH DE-ICE BOOT	1	4.0
2	P25S-7D5057-02		FASTBOOT® WING RH DE-ICE BOOT	1	4.0
3	P25S-7D5057-07		FASTBOOT® HORIZONTAL STABILIZER LH DE-ICE BOOT	1	1.9
4	P25S-7D5057-08		FASTBOOT® HORIZONTAL STABILIZER RH DE-ICE BOOT	1	1.9
5	P25S-7D5057-09		FASTBOOT® VERTICAL STABILIZER DE-ICE BOOT	1	1.8

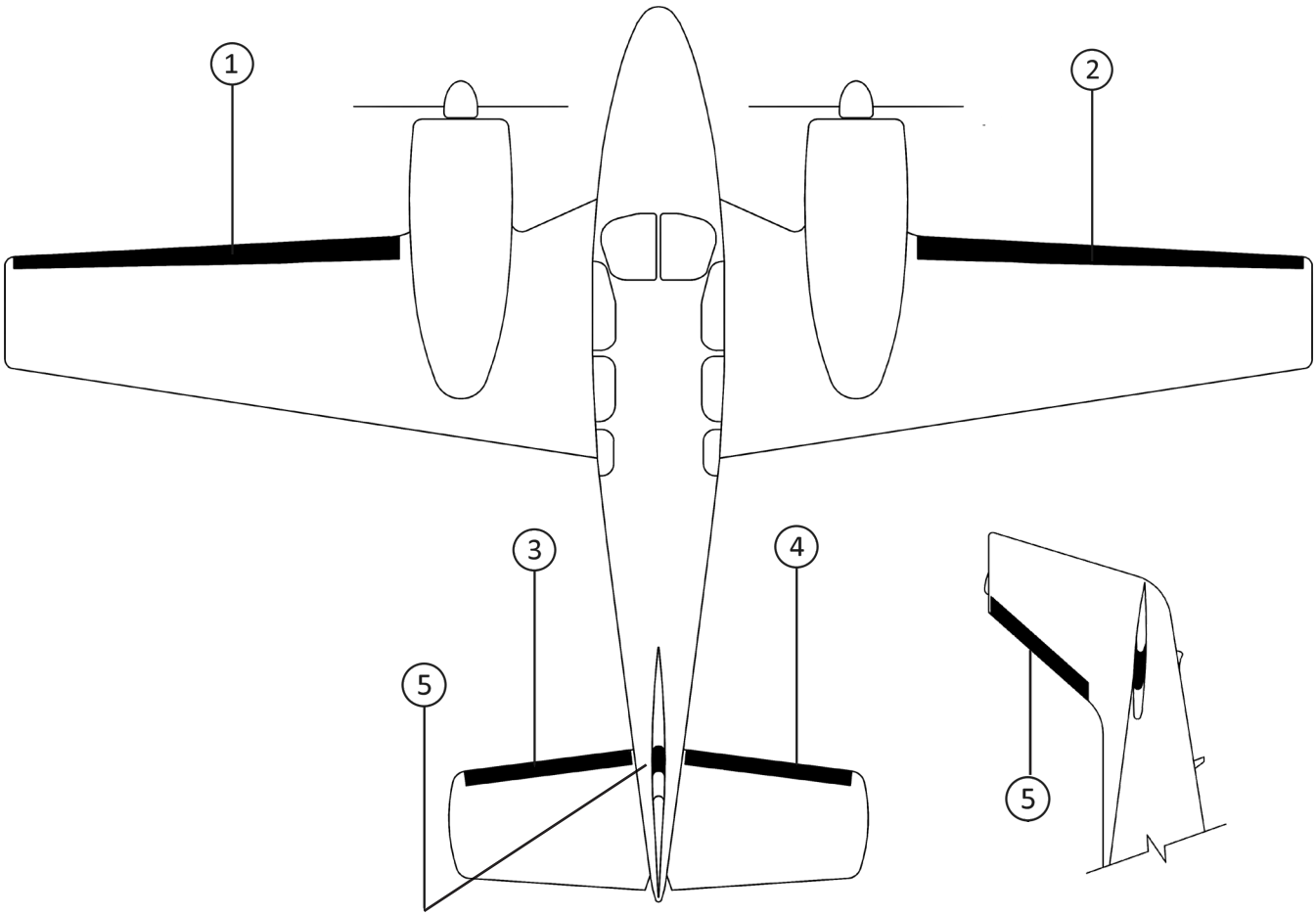

BEECHCRAFT E55A (BARON)

STANDARD DE-ICE BOOTS

POSITION ID	GOODRICH PART NUMBER	AIRCRAFT OEM P/N	DESCRIPTION	QTY PER AIRCRAFT	WT
1	25S-7D5057-01		NACELLE-TIP LH DE-ICE BOOT	1	4.0
2	25S-7D5057-02		NACELLE-TIP RH DE-ICE BOOT	1	4.0
3	25S-7D5057-07		HORIZONTAL STABILIZER LH DE-ICE BOOT	1	2.6
4	25S-7D5057-08		HORIZONTAL STABILIZER RH DE-ICE BOOT	1	2.6
5	25S-7D5057-09		VERTICAL STABILIZER DE-ICE BOOT	1	2.3

FASTboot® DE-ICE BOOTS

POSITION ID	GOODRICH PART NUMBER	AIRCRAFT OEM P/N	DESCRIPTION	QTY PER AIRCRAFT	WT
1	P25S-7D5057-01		FASTBOOT® WING LH DE-ICE BOOT	1	4.0
2	P25S-7D5057-02		FASTBOOT® WING RH DE-ICE BOOT	1	4.0
3	P25S-7D5057-07		FASTBOOT® HORIZONTAL STABILIZER LH DE-ICE BOOT	1	1.9
4	P25S-7D5057-08		FASTBOOT® HORIZONTAL STABILIZER RH DE-ICE BOOT	1	1.9
5	P25S-7D5057-09		FASTBOOT® VERTICAL STABILIZER DE-ICE BOOT	1	1.8

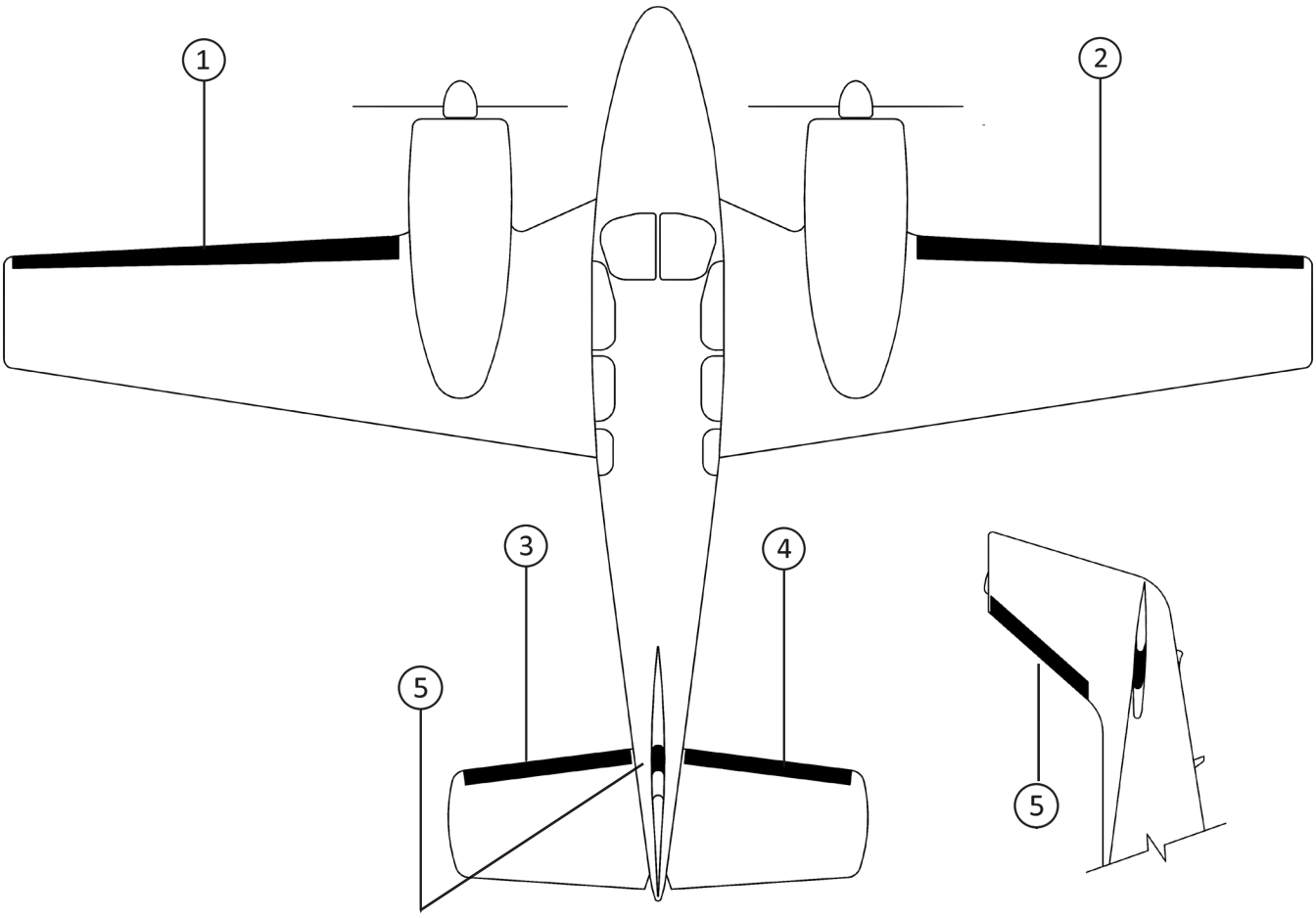

BEECHCRAFT 56TC (BARON)

STANDARD DE-ICE BOOTS

POSITION ID	GOODRICH PART NUMBER	AIRCRAFT OEM P/N	DESCRIPTION	QTY PER AIRCRAFT	WT
1	23S-2124-1-1		NACELLE-TIP LH DE-ICE BOOT	1	5.9
2	23S-2124-1-2		NACELLE-TIP RH DE-ICE BOOT	1	6.3
3	23S-2004-15-1		HORIZONTAL STABILIZER LH DE-ICE BOOT	1	2.6
4	23S-2004-15-2		HORIZONTAL STABILIZER RH DE-ICE BOOT	1	2.6
5	23S-2004-7-1		VERTICAL STABILIZER DE-ICE BOOT	1	2.3

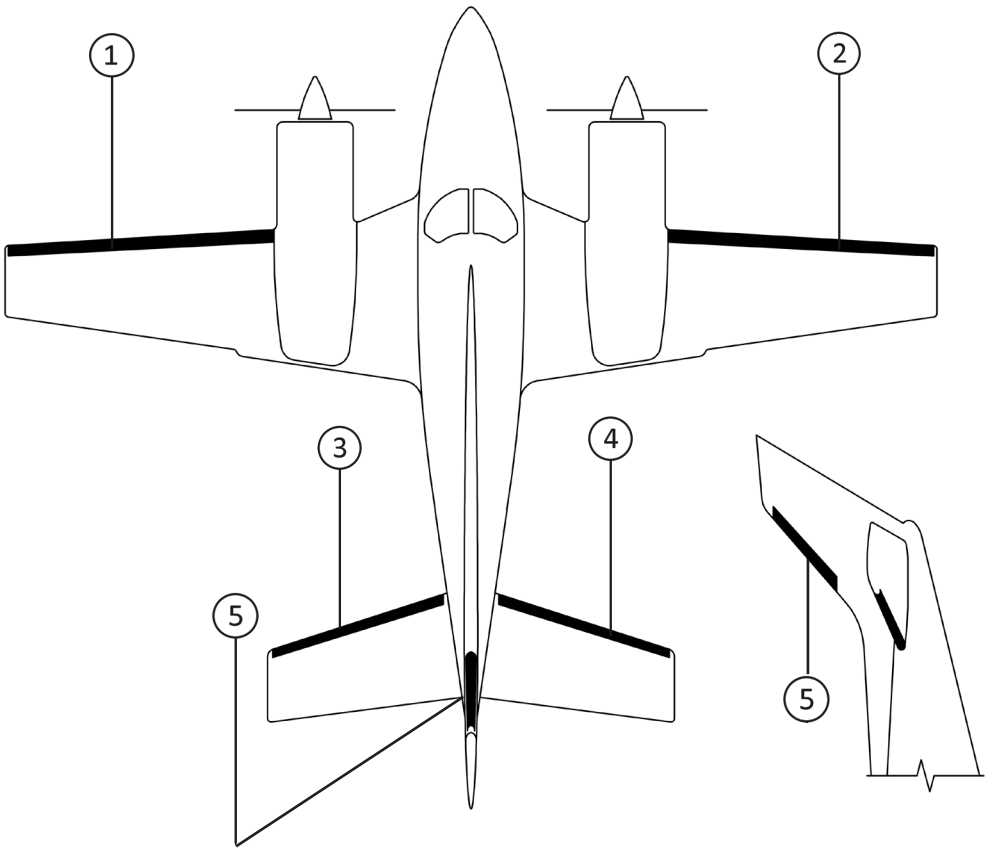

BEECHCRAFT A56TC (BARON) S/N TG-78 UP

STANDARD DE-ICE BOOTS

POSITION ID	GOODRICH PART NUMBER	AIRCRAFT OEM P/N	DESCRIPTION	QTY PER AIRCRAFT	WT
1	23S-2124-4-1	60-380000-1	NACELLE-TIP LH DE-ICE BOOT	1	6.0
2	23S-2124-4-2	60-380000-2	NACELLE-TIP RH DE-ICE BOOT	1	6.3
3	23S-2004-15-1		HORIZONTAL STABILIZER LH DE-ICE BOOT	1	2.6
4	23S-2004-15-2		HORIZONTAL STABILIZER RH DE-ICE BOOT	1	2.6
5	23S-2004-7-1		VERTICAL STABILIZER DE-ICE BOOT	1	2.3

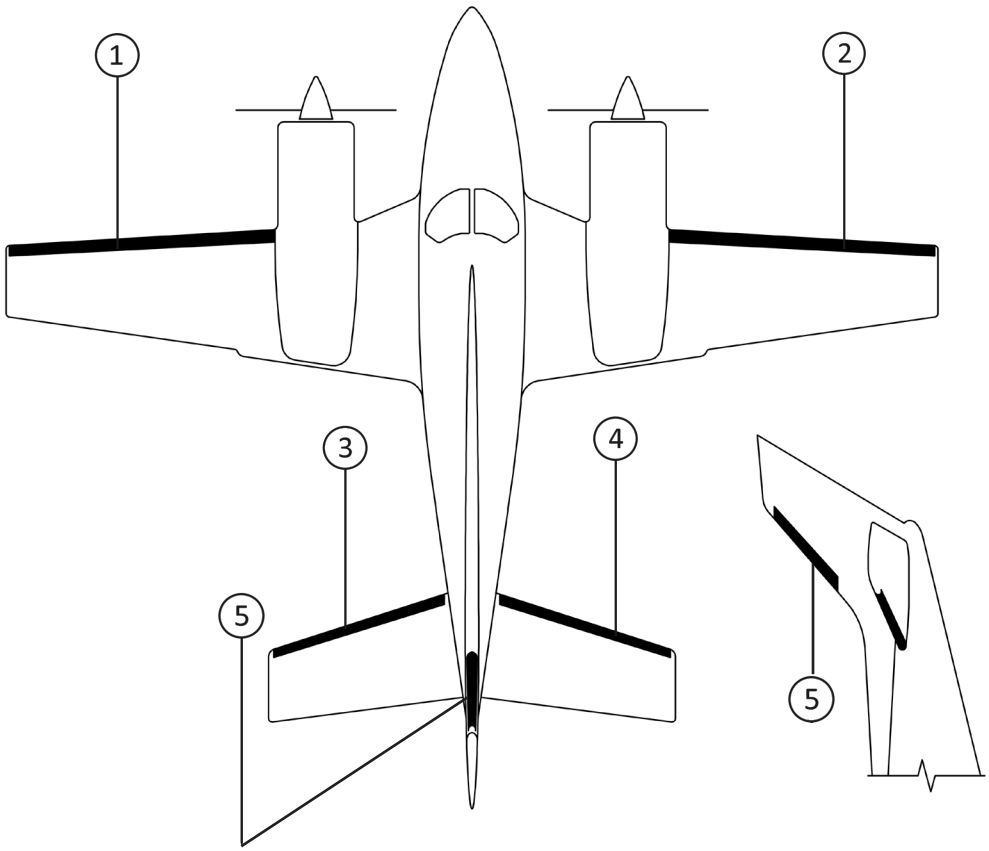

BEECHCRAFT 58 (BARON) S/N TH-1 THRU TH-368, TH-370, TH-371

BEECHCRAFT 58 (BARON) S/N TH-1 THRU TH-368, TH-370, TH-371

STANDARD DE-ICE BOOTS

POSITION ID	GOODRICH PART NUMBER	AIRCRAFT OEM P/N	DESCRIPTION	QTY PER AIRCRAFT	WT
1	23S-2124-5-1	60-380000-7	NACELLE-TIP LH DE-ICE BOOT	1	6.0
2	23S-2124-5-2	60-380000-8	NACELLE-TIP RH DE-ICE BOOT	1	6.0
3	23S-2004-15-1		HORIZONTAL STABILIZER LH DE-ICE BOOT	1	2.6
4	23S-2004-15-2		HORIZONTAL STABILIZER RH DE-ICE BOOT	1	2.6
5	23S-2004-7-1		VERTICAL STABILIZER DE-ICE BOOT	1	2.3

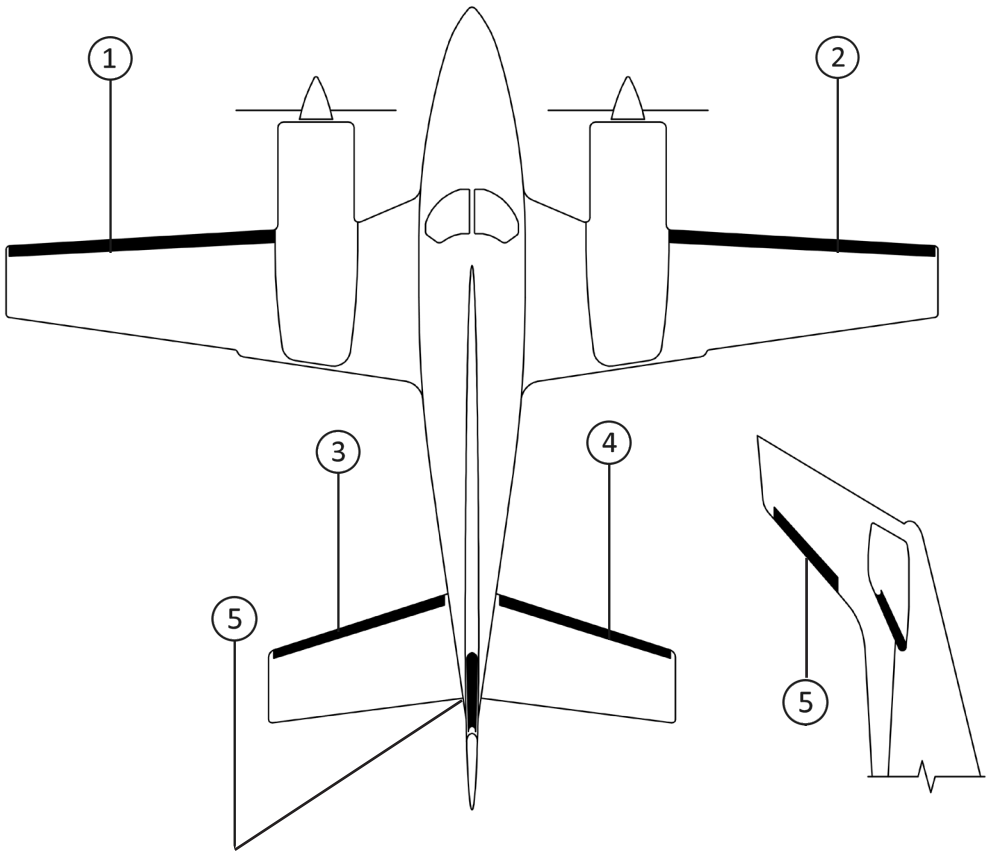

BEECHCRAFT 58 (BARON) S/N TH-369

STANDARD DE-ICE BOOTS

POSITION ID	GOODRICH PART NUMBER	AIRCRAFT OEM P/N	DESCRIPTION	QTY PER AIRCRAFT	WT
1	23S-2124-5-1	60-380000-7	NACELLE-TIP LH DE-ICE BOOT	1	6.0
2	23S-2124-5-2	60-380000-8	NACELLE-TIP RH DE-ICE BOOT	1	6.0
3	23S-2004-15-1		HORIZONTAL STABILIZER LH DE-ICE BOOT	1	2.6
4	23S-2004-15-2		HORIZONTAL STABILIZER RH DE-ICE BOOT	1	2.6
5	25S-7D5057-09		VERTICAL STABILIZER DE-ICE BOOT	1	2.3

FASTboot® DE-ICE BOOTS

POSITION ID	GOODRICH PART NUMBER	AIRCRAFT OEM P/N	DESCRIPTION	QTY PER AIRCRAFT	WT
5	P25S-7D5057-09		FASTBOOT® VERTICAL STABILIZER DE-ICE BOOT	1	1.8

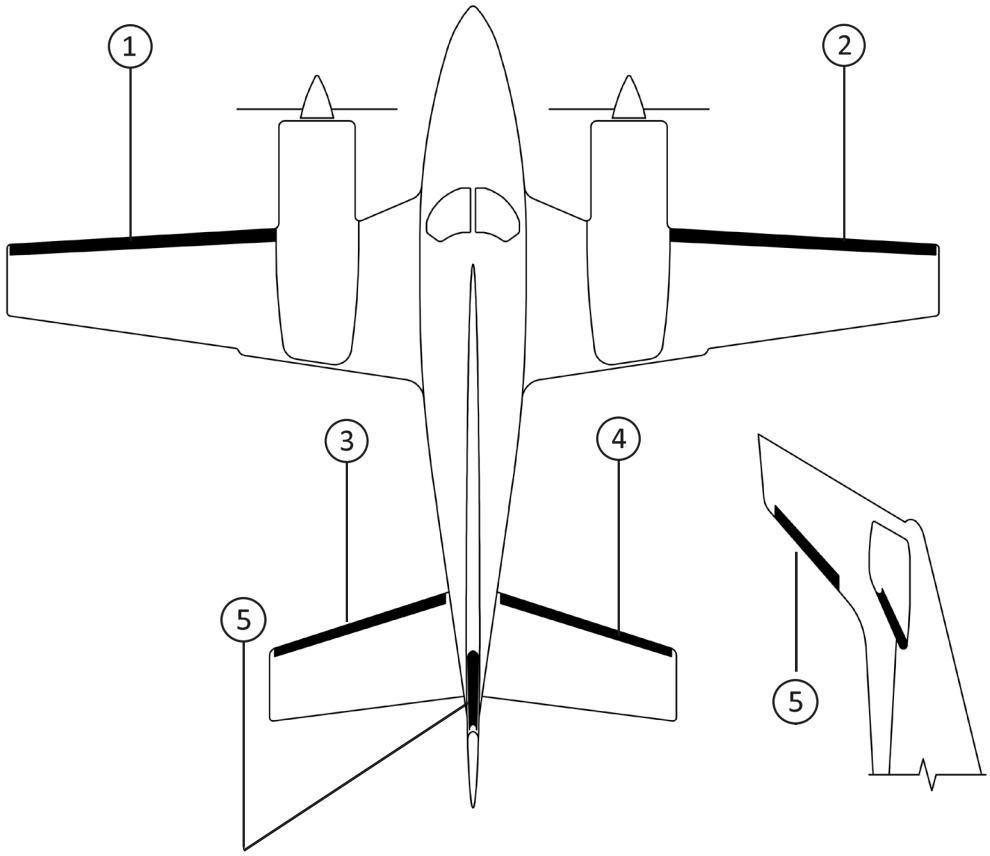

BEECHCRAFT 58 (BARON) S/N TH-372 THRU TH-374

STANDARD DE-ICE BOOTS

POSITION ID	GOODRICH PART NUMBER	AIRCRAFT OEM P/N	DESCRIPTION	QTY PER AIRCRAFT	WT
1	25S-7D5057-01		NACELLE-TIP LH DE-ICE BOOT	1	4.0
2	25S-7D5057-02		NACELLE-TIP RH DE-ICE BOOT	1	4.0
3	23S-2004-15-1		HORIZONTAL STABILIZER LH DE-ICE BOOT	1	2.6
4	23S-2004-15-2		HORIZONTAL STABILIZER RH DE-ICE BOOT	1	2.6
5	23S-2004-7-1		VERTICAL STABILIZER DE-ICE BOOT	1	2.3

FASTboot® DE-ICE BOOTS

POSITION ID	GOODRICH PART NUMBER	AIRCRAFT OEM P/N	DESCRIPTION	QTY PER AIRCRAFT	WT
1	P25S-7D5057-01		FASTBOOT® WING LH DE-ICE BOOT	1	4.0
2	P25S-7D5057-02		FASTBOOT® WING RH DE-ICE BOOT	1	4.0

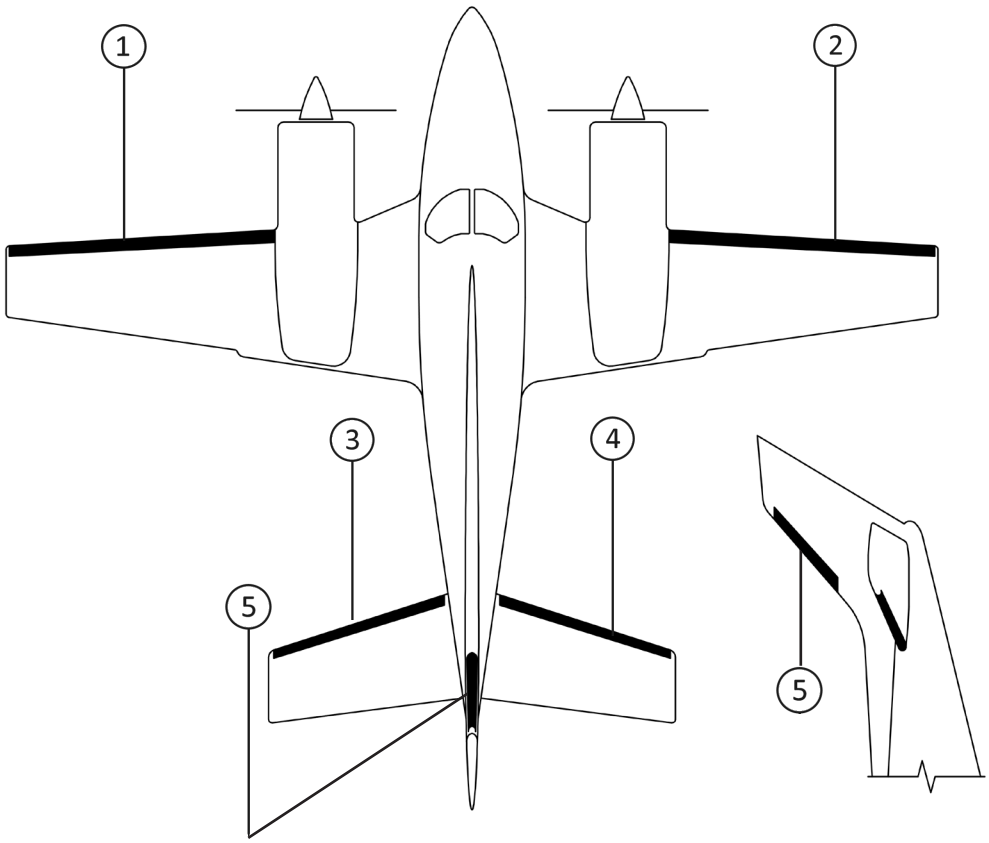

BEECHCRAFT 58 (BARON) S/N TH-375 THRU TH-1471, TH-1476, TH-1487, TH-1489, TH-1498

STANDARD DE-ICE BOOTS

POSITION ID	GOODRICH PART NUMBER	AIRCRAFT OEM P/N	DESCRIPTION	QTY PER AIRCRAFT	WT
1	25S-7D5057-01		NACELLE-TIP LH DE-ICE BOOT	1	4.0
2	25S-7D5057-02		NACELLE-TIP RH DE-ICE BOOT	1	4.0
3	25S-7D5057-07		HORIZONTAL STABILIZER LH DE-ICE BOOT	1	1.9
4	25S-7D5057-08		HORIZONTAL STABILIZER RH DE-ICE BOOT	1	1.9
5	25S-7D5057-09		VERTICAL STABILIZER DE-ICE BOOT	1	1.8

FASTboot® DE-ICE BOOTS

POSITION ID	GOODRICH PART NUMBER	AIRCRAFT OEM P/N	DESCRIPTION	QTY PER AIRCRAFT	WT
1	P25S-7D5057-01		FASTBOOT® NACELLE-TIP LH DE-ICE BOOT	1	4.0
2	P25S-7D5057-02		FASTBOOT® NACELLE-TIP RH DE-ICE BOOT	1	4.0
3	P25S-7D5057-07		FASTBOOT® HORIZONTAL STABILIZER LH DE-ICE BOOT	1	1.9
4	P25S-7D5057-08		FASTBOOT® HORIZONTAL STABILIZER RH DE-ICE BOOT	1	1.9
5	P25S-7D5057-09		FASTBOOT® VERTICAL STABILIZER DE-ICE BOOT	1	1.8

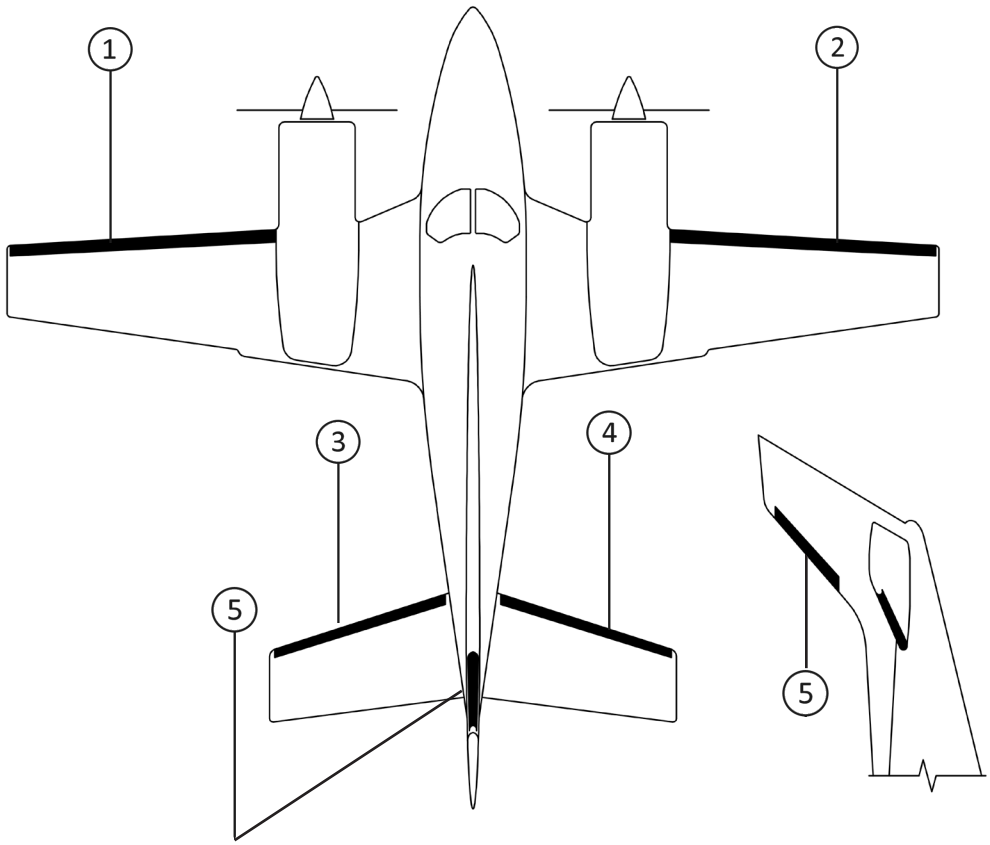

BEECHCRAFT 58 (BARON) S/N TH-1472 UP EXCEPT TH-1476, TH-1487, TH-1489, TH-1498

STANDARD DE-ICE BOOTS

POSITION ID	GOODRICH PART NUMBER	AIRCRAFT OEM P/N	DESCRIPTION	QTY PER AIRCRAFT	WT
1	25S-7D5057-13		FUSELAGE-NACELLE LH DE-ICE BOOT	1	0.9
2	25S-7D5057-14		FUSELAGE-NACELLE RH DE-ICE BOOT	1	0.9
3	25S-7D5057-01		NACELLE-TIP LH DE-ICE BOOT	1	4.0
4	25S-7D5057-02		NACELLE-TIP RH DE-ICE BOOT	1	4.0
5	25S-7D5057-07		HORIZONTAL STABILIZER LH DE-ICE BOOT	1	2.6
6	25S-7D5057-08		HORIZONTAL STABILIZER RH DE-ICE BOOT	1	2.6
7	25S-7D5057-09		VERTICAL STABILIZER DE-ICE BOOT	1	2.3

FASTboot® DE-ICE BOOTS

POSITION ID	GOODRICH PART NUMBER	AIRCRAFT OEM P/N	DESCRIPTION	QTY PER AIRCRAFT	WT
1	P25S-7D5057-13		FASTBOOT® FUSELAGE-NACELLE LH DE-ICE BOOT	1	0.9
2	P25S-7D5057-14		FASTBOOT® FUSELAGE-NACELLE RH DE-ICE BOOT	1	0.9
3	P25S-7D5057-01		FASTBOOT® NACELLE-TIP LH DE-ICE BOOT	1	4.0
4	P25S-7D5057-02		FASTBOOT® NACELLE-TIP RH DE-ICE BOOT	1	4.0
5	P25S-7D5057-07		FASTBOOT® HORIZONTAL STABILIZER LH DE-ICE BOOT	1	1.9
6	P25S-7D5057-08		FASTBOOT® HORIZONTAL STABILIZER RH DE-ICE BOOT	1	1.9
7	P25S-7D5057-09		FASTBOOT® VERTICAL STABILIZER DE-ICE BOOT	1	1.8

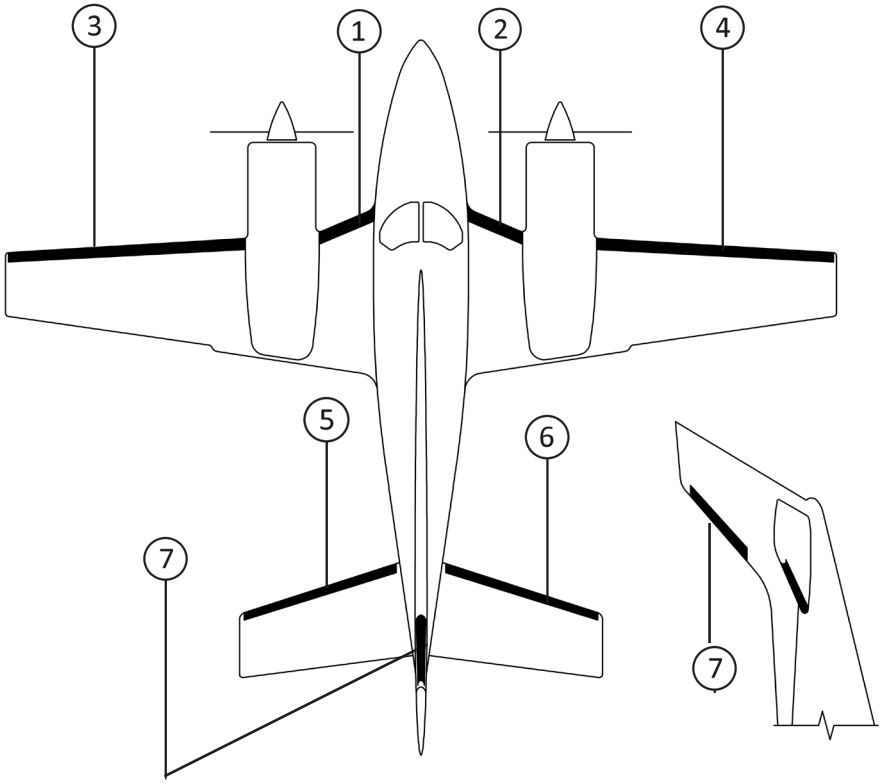

BEECHCRAFT 58P (BARON) S/N TJ-3 THRU TJ-31, TJ-33 THRU TJ-37

STANDARD DE-ICE BOOTS

POSITION ID	GOODRICH PART NUMBER	AIRCRAFT OEM P/N	DESCRIPTION	QTY PER AIRCRAFT	WT
1	25S-7D5057-13		FUSELAGE-NACELLE LH DE-ICE BOOT	1	0.9
2	25S-7D5057-14		FUSELAGE-NACELLE RH DE-ICE BOOT	1	0.9
3	25S-7D5057-01		NACELLE-TIP LH DE-ICE BOOT	1	4.0
4	25S-7D5057-02		NACELLE-TIP RH DE-ICE BOOT	1	4.0
5	25S-7D5057-07		HORIZONTAL STABILIZER LH DE-ICE BOOT	1	1.9
6	25S-7D5057-08		HORIZONTAL STABILIZER RH DE-ICE BOOT	1	1.9
7	25S-7D5057-09		VERTICAL STABILIZER DE-ICE BOOT	1	1.8

FASTboot® DE-ICE BOOTS

POSITION ID	GOODRICH PART NUMBER	AIRCRAFT OEM P/N	DESCRIPTION	QTY PER AIRCRAFT	WT
1	P25S-7D5057-13		FASTBOOT® FUSELAGE-NACELLE LH DE-ICE BOOT	1	0.9
2	P25S-7D5057-14		FASTBOOT® FUSELAGE-NACELLE RH DE-ICE BOOT	1	0.9
3	P25S-7D5057-01		FASTBOOT® NACELLE-TIP LH DE-ICE BOOT	1	4.0
4	P25S-7D5057-02		FASTBOOT® NACELLE-TIP RH DE-ICE BOOT	1	4.0
5	P25S-7D5057-07		FASTBOOT® HORIZONTAL STABILIZER LH DE-ICE BOOT	1	1.9
6	P25S-7D5057-08		FASTBOOT® HORIZONTAL STABILIZER RH DE-ICE BOOT	1	1.9
7	P25S-7D5057-09		FASTBOOT® VERTICAL STABILIZER DE-ICE BOOT	1	1.8

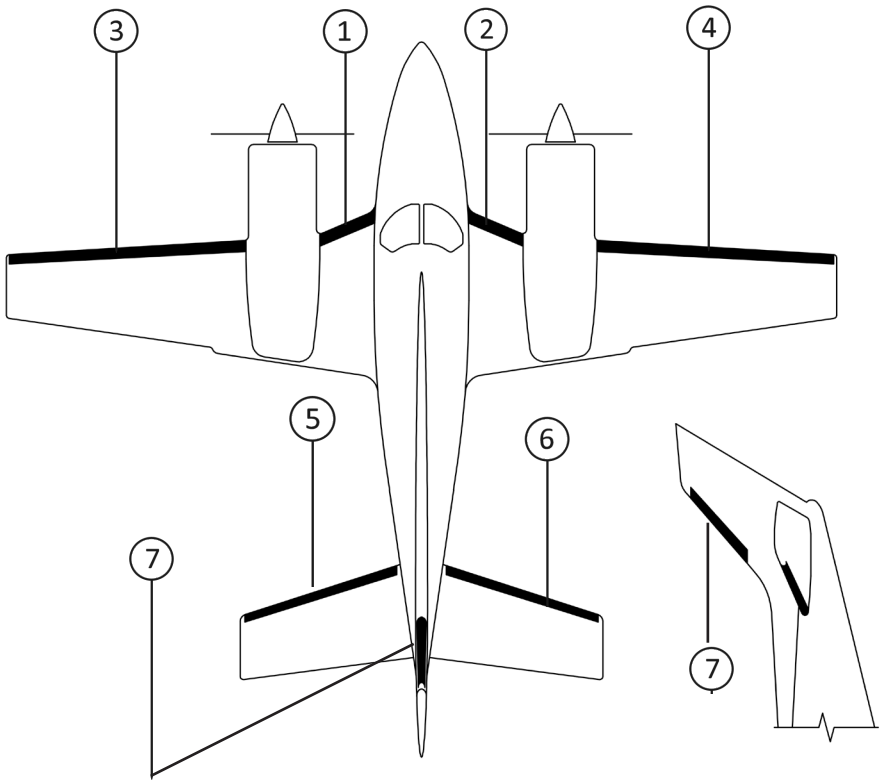

BEECHCRAFT 58P (BARON) S/N TJ-32, TJ-38 UP

STANDARD DE-ICE BOOTS

POSITION ID	GOODRICH PART NUMBER	AIRCRAFT OEM P/N	DESCRIPTION	QTY PER AIRCRAFT	WT
1	25S-7D5057-13		FUSELAGE-NACELLE LH DE-ICE BOOT	1	0.9
2	25S-7D5057-14		FUSELAGE-NACELLE RH DE-ICE BOOT	1	0.9
3	25S-7D5057-11		NACELLE-TIP LH DE-ICE BOOT	1	4.0
4	25S-7D5057-12		NACELLE-TIP RH DE-ICE BOOT	1	4.0
5	25S-7D5057-07		HORIZONTAL STABILIZER LH DE-ICE BOOT	1	1.9
6	25S-7D5057-08		HORIZONTAL STABILIZER RH DE-ICE BOOT	1	1.9
7	25S-7D5057-09		VERTICAL STABILIZER DE-ICE BOOT	1	1.8

FASTboot® DE-ICE BOOTS

POSITION ID	GOODRICH PART NUMBER	AIRCRAFT OEM P/N	DESCRIPTION	QTY PER AIRCRAFT	WT
1	P25S-7D5057-13		FASTBOOT® FUSELAGE-NACELLE LH DE-ICE BOOT	1	0.9
2	P25S-7D5057-14		FASTBOOT® FUSELAGE-NACELLE RH DE-ICE BOOT	1	0.9
3	P25S-7D5057-11		FASTBOOT® NACELLE-TIP LH DE-ICE BOOT	1	4.0
4	P25S-7D5057-12		FASTBOOT® NACELLE-TIP RH DE-ICE BOOT	1	4.0
5	P25S-7D5057-07		FASTBOOT® HORIZONTAL STABILIZER LH DE-ICE BOOT	1	1.9
6	P25S-7D5057-08		FASTBOOT® HORIZONTAL STABILIZER RH DE-ICE BOOT	1	1.9
7	P25S-7D5057-09		FASTBOOT® VERTICAL STABILIZER DE-ICE BOOT	1	1.8

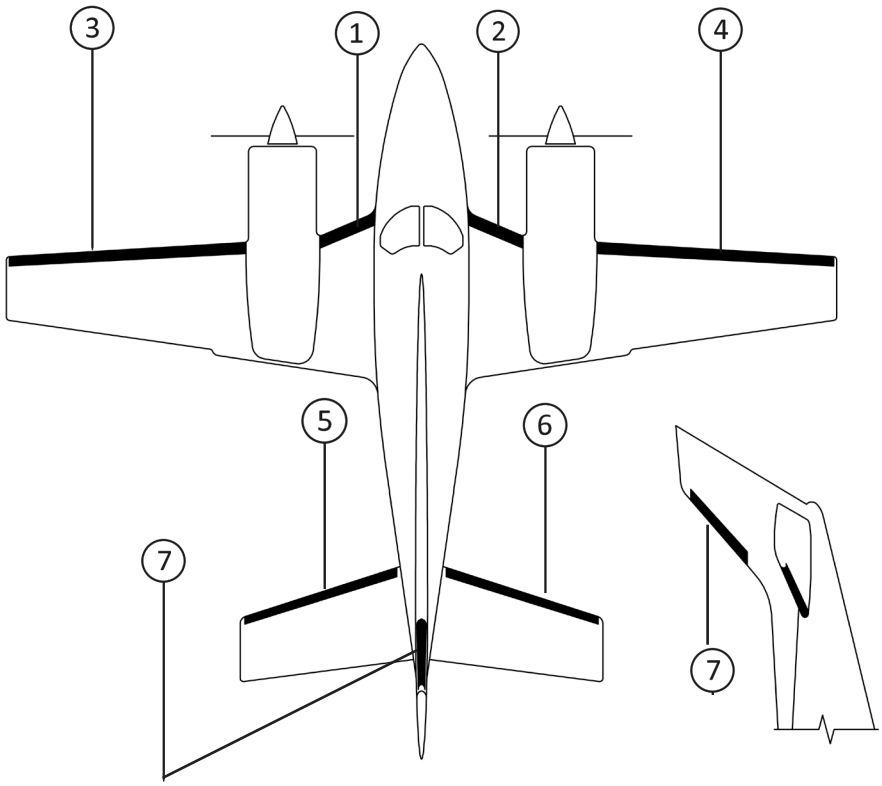

BEECHCRAFT 58TC (BARON)

STANDARD DE-ICE BOOTS

POSITION ID	GOODRICH PART NUMBER	AIRCRAFT OEM P/N	DESCRIPTION	QTY PER AIRCRAFT	WT
1	25S-7D5057-13		FUSELAGE-NACELLE LH DE-ICE BOOT	1	0.9
2	25S-7D5057-14		FUSELAGE-NACELLE RH DE-ICE BOOT	1	0.9
3	25S-7D5057-11		NACELLE-TIP LH DE-ICE BOOT	1	4.0
4	25S-7D5057-12		NACELLE-TIP RH DE-ICE BOOT	1	4.0
5	25S-7D5057-07		HORIZONTAL STABILIZER LH DE-ICE BOOT	1	1.9
6	25S-7D5057-08		HORIZONTAL STABILIZER RH DE-ICE BOOT	1	1.9
7	25S-7D5057-09		VERTICAL STABILIZER DE-ICE BOOT	1	1.8

FASTboot® DE-ICE BOOTS

POSITION ID	GOODRICH PART NUMBER	AIRCRAFT OEM P/N	DESCRIPTION	QTY PER AIRCRAFT	WT
1	P25S-7D5057-13		FASTBOOT® FUSELAGE-NACELLE LH DE-ICE BOOT	1	0.9
2	P25S-7D5057-14		FASTBOOT® FUSELAGE-NACELLE RH DE-ICE BOOT	1	0.9
3	P25S-7D5057-11		FASTBOOT® NACELLE-TIP LH DE-ICE BOOT	1	4.0
4	P25S-7D5057-12		FASTBOOT® NACELLE-TIP RH DE-ICE BOOT	1	4.0
5	P25S-7D5057-07		FASTBOOT® HORIZONTAL STABILIZER LH DE-ICE BOOT	1	1.9
6	P25S-7D5057-08		FASTBOOT® HORIZONTAL STABILIZER RH DE-ICE BOOT	1	1.9
7	P25S-7D5057-09		FASTBOOT® VERTICAL STABILIZER DE-ICE BOOT	1	1.8

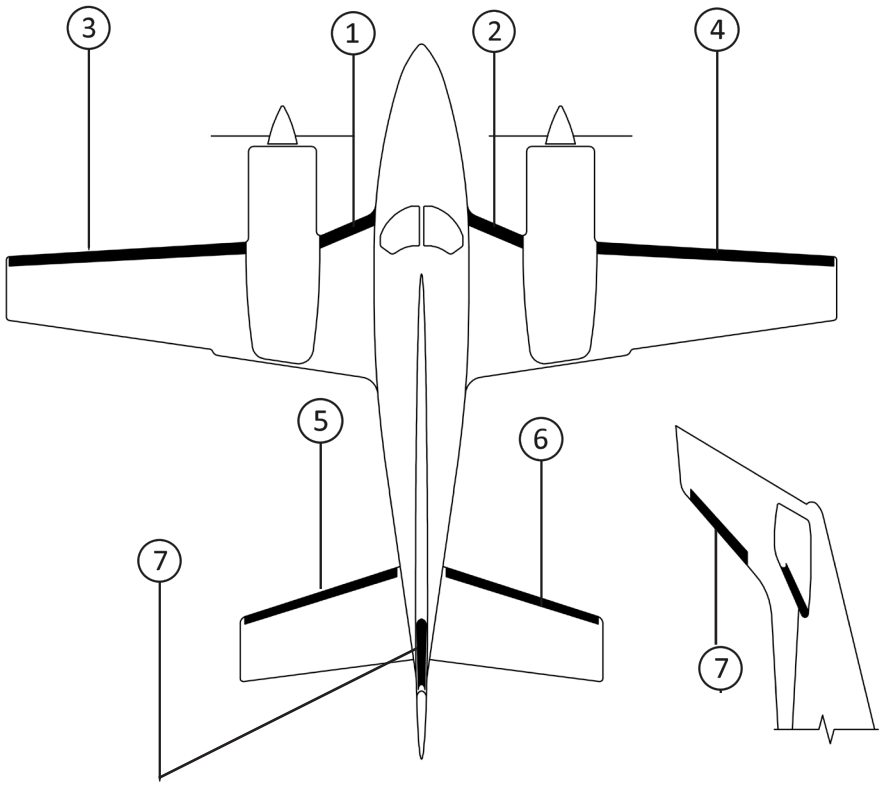

BEECHCRAFT 60 (DUKE)

STANDARD DE-ICE BOOTS

POSITION ID	GOODRICH PART NUMBER	AIRCRAFT OEM P/N	DESCRIPTION	QTY PER AIRCRAFT	WT
1	23S-2124-4-1	60-380000-1	NACELLE-TIP LH DE-ICE BOOT	1	6.0
2	23S-2124-4-2	60-380000-2	NACELLE-TIP RH DE-ICE BOOT	1	6.3
3	23S-2124-2-1	60-380000-3	HORIZONTAL STABILIZER LH DE-ICE BOOT	1	3.9
4	23S-2124-2-2	60-380000-4	HORIZONTAL STABILIZER RH DE-ICE BOOT	1	3.9
5	23S-2124-3-1	60-380000-5	VERTICAL STABILIZER DE-ICE BOOT	1	1.7

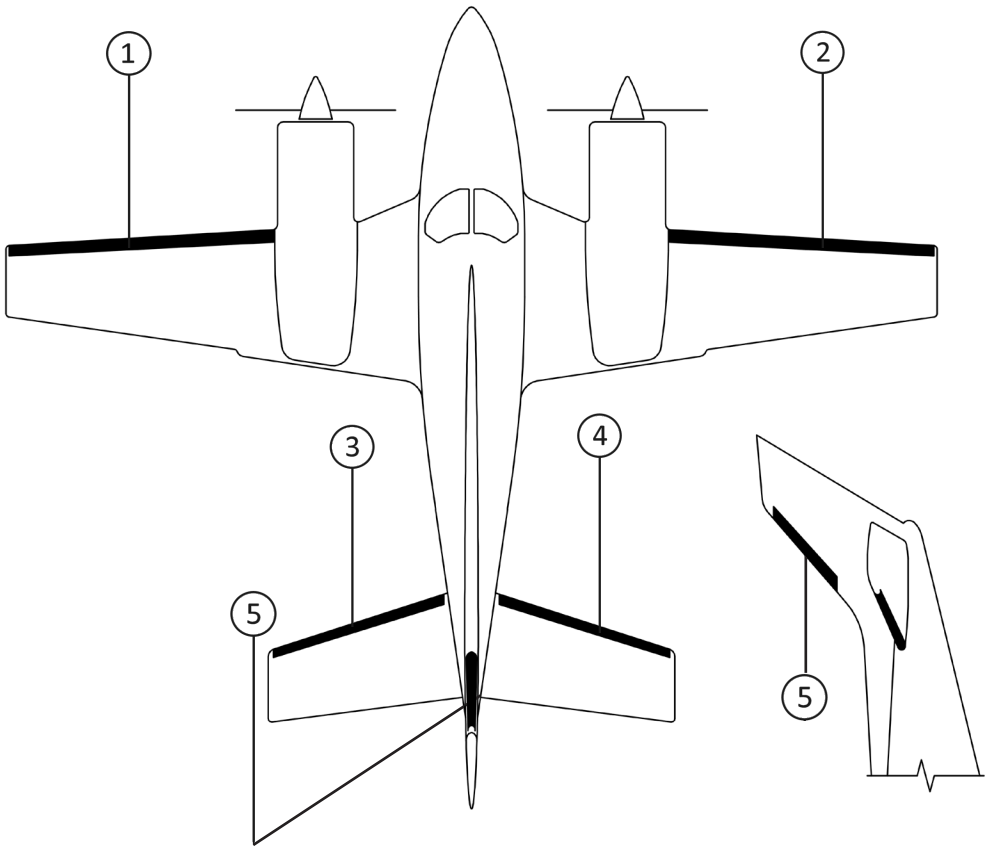

BEECHCRAFT 60 (DUKE) S/N P-50 UP

STANDARD DE-ICE BOOTS

POSITION ID	GOODRICH PART NUMBER	AIRCRAFT OEM P/N	DESCRIPTION	QTY PER AIRCRAFT	WT
1	23S-2124-5-1*	60-380000-7	NACELLE-TIP LH DE-ICE BOOT	1	6.0
2	23S-2124-5-2*	60-380000-8	NACELLE-TIP RH DE-ICE BOOT	1	6.0
3	23S-2124-2-1**	60-380000-3	HORIZONTAL STABILIZER LH DE-ICE BOOT	1	3.9
4	23S-2124-2-2**	60-380000-4	HORIZONTAL STABILIZER RH DE-ICE BOOT	1	3.9
5	23S-2124-3-1	60-380000-5	VERTICAL STABILIZER DE-ICE BOOT	1	1.7

*EXCLUDING S/N P-253

**EXCLUDING S/N P-252, P-253

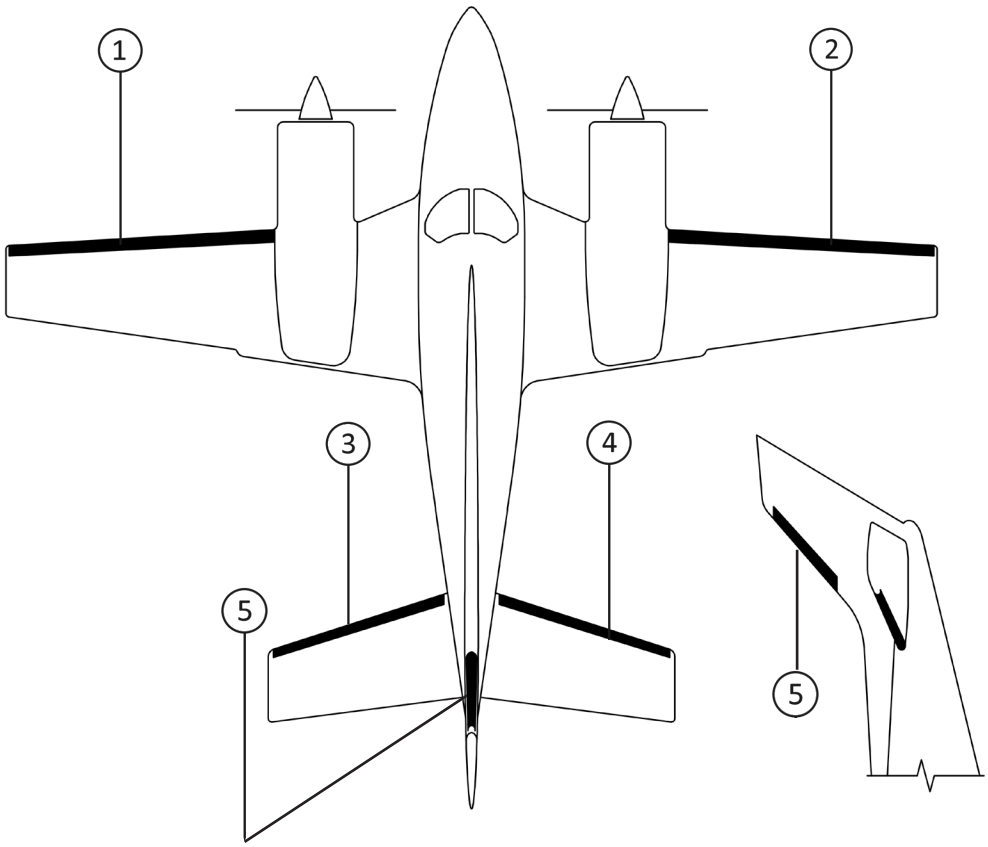

BEECHCRAFT A60 (DUKE) S/N P-123 UP

STANDARD DE-ICE BOOTS

POSITION ID	GOODRICH PART NUMBER	AIRCRAFT OEM P/N	DESCRIPTION	QTY PER AIRCRAFT	WT
1	23S-2124-5-1*	60-380000-7	NACELLE-TIP LH DE-ICE BOOT	1	6.0
2	23S-2124-5-2*	60-380000-8	NACELLE-TIP RH DE-ICE BOOT	1	6.0
3	23S-2124-2-1**	60-380000-3	HORIZONTAL STABILIZER LH DE-ICE BOOT	1	3.9
4	23S-2124-2-2**	60-380000-4	HORIZONTAL STABILIZER RH DE-ICE BOOT	1	3.9
5	23S-2124-3-1	60-380000-5	VERTICAL STABILIZER DE-ICE BOOT	1	1.7

*EXCLUDING S/N P-253

**EXCLUDING S/N P-252, P-253

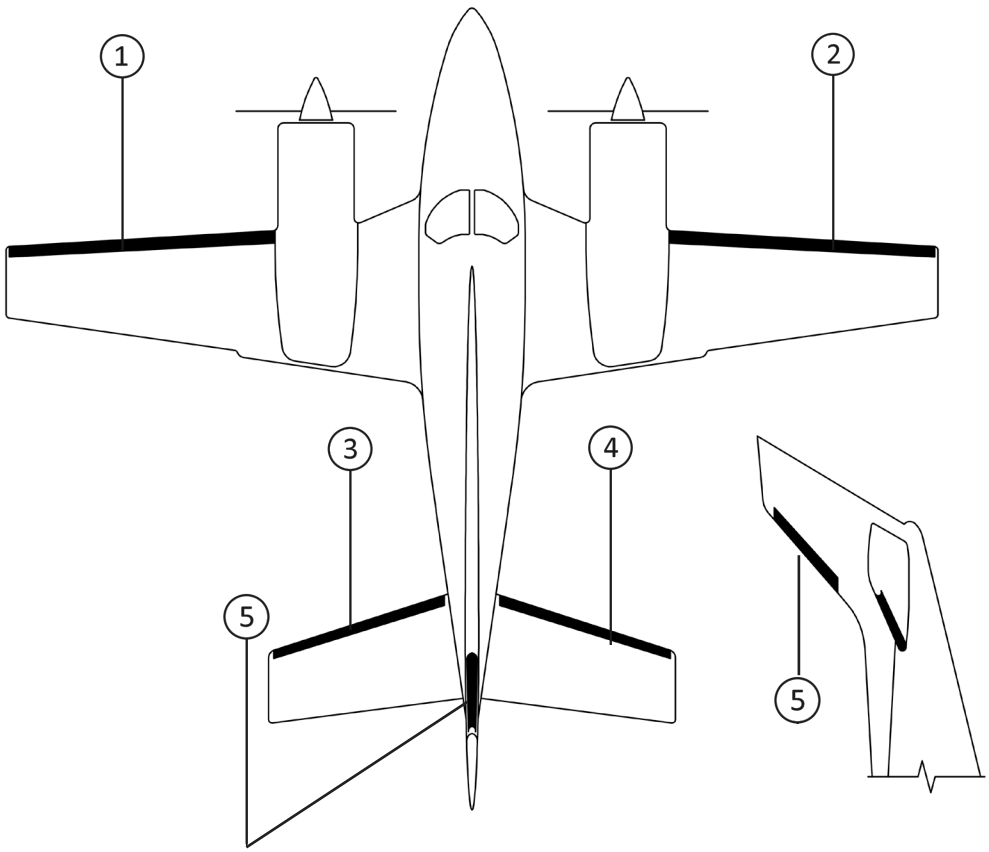

BEECHCRAFT B60 (DUKE) S/N P-247 THRU P-253 (DUKE)

STANDARD DE-ICE BOOTS

POSITION ID	GOODRICH PART NUMBER	AIRCRAFT OEM P/N	DESCRIPTION	QTY PER AIRCRAFT	WT
1	23S-2124-5-1*	60-380000-7	NACELLE-TIP LH DE-ICE BOOT	1	6.0
2	23S-2124-5-2*	60-380000-8	NACELLE-TIP RH DE-ICE BOOT	1	6.0
3	23S-2124-2-1**	60-380000-3	HORIZONTAL STABILIZER LH DE-ICE BOOT	1	3.9
4	23S-2124-2-2**	60-380000-4	HORIZONTAL STABILIZER RH DE-ICE BOOT	1	3.9
5	23S-2124-3-1	60-380000-5	VERTICAL STABILIZER DE-ICE BOOT	1	1.7

*EXCLUDING S/N P-253

**EXCLUDING S/N P-252, P-253

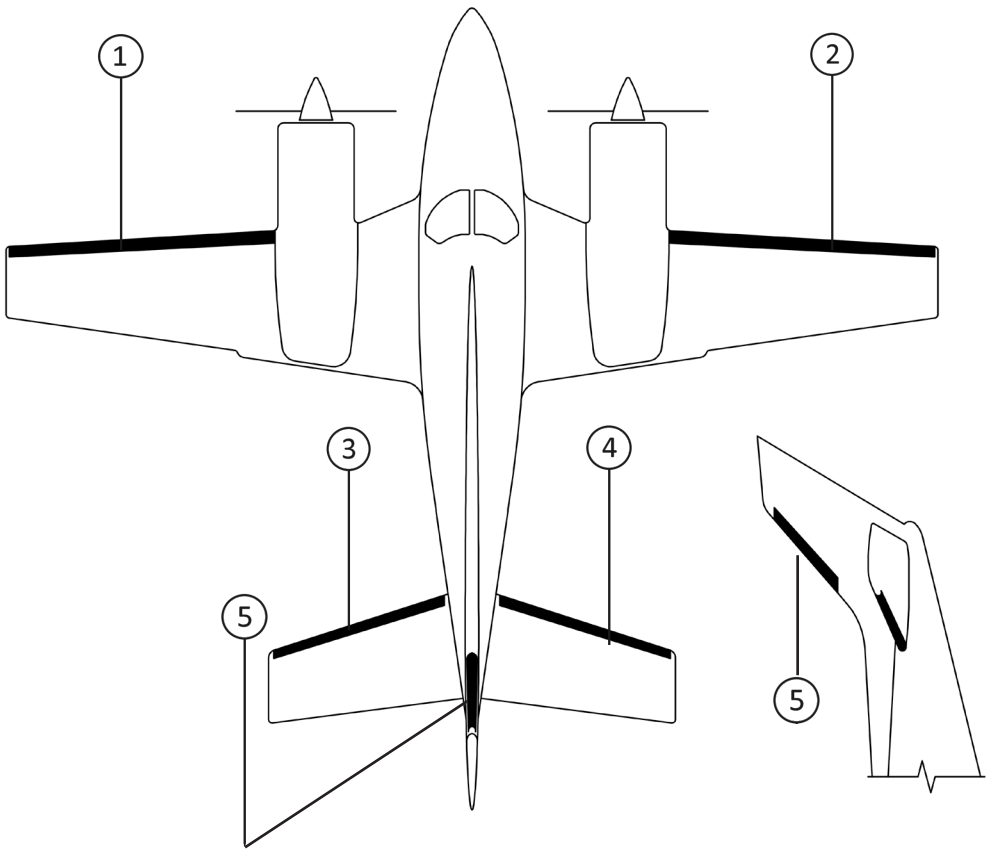

BEECHCRAFT B60 (DUKE) S/N P-252 UP WITH LIGHTS

STANDARD DE-ICE BOOTS

POSITION ID	GOODRICH PART NUMBER	AIRCRAFT OEM P/N	DESCRIPTION	QTY PER AIRCRAFT	WT
1	25S-7D5057-01		NACELLE-TIP LH DE-ICE BOOT	1	4.0
2	25S-7D5057-02		NACELLE-TIP RH DE-ICE BOOT	1	4.0
3	25S-7D5057-05		HORIZONTAL STABILIZER LH DE-ICE BOOT	1	2.3
4	25S-7D5057-06		HORIZONTAL STABILIZER RH DE-ICE BOOT	1	2.3
5	25S-7D5057-10		VERTICAL STABILIZER DE-ICE BOOT	1	1.0

FASTboot® DE-ICE BOOTS

POSITION ID	GOODRICH PART NUMBER	AIRCRAFT OEM P/N	DESCRIPTION	QTY PER AIRCRAFT	WT
1	P25S-7D5057-01		FASTBOOT® NACELLE-TIP LH DE-ICE BOOT	1	4.0
2	P25S-7D5057-02		FASTBOOT® NACELLE-TIP RH DE-ICE BOOT	1	4.0
3	P25S-7D5057-05		FASTBOOT® HORIZONTAL STABILIZER LH DE-ICE BOOT	1	2.3
4	P25S-7D5057-06		FASTBOOT® HORIZONTAL STABILIZER RH DE-ICE BOOT	1	2.3
5	P25S-7D5057-10		FASTBOOT® VERTICAL STABILIZER DE-ICE BOOT	1	1.0

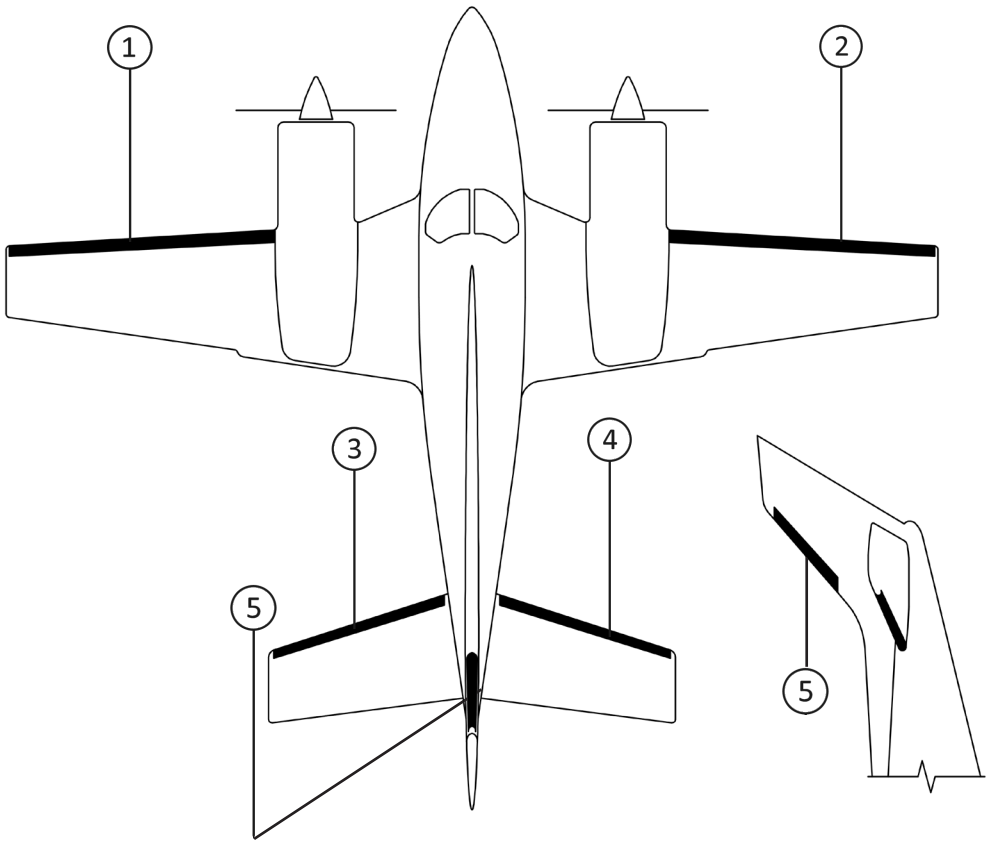

BEECHCRAFT B60 (DUKE) S/N P-252 UP WITHOUT LIGHTS

STANDARD DE-ICE BOOTS

POSITION ID	GOODRICH PART NUMBER	AIRCRAFT OEM P/N	DESCRIPTION	QTY PER AIRCRAFT	WT
1	25S-7D5057-11		NACELLE-TIP LH DE-ICE BOOT	1	4.0
2	25S-7D5057-12		NACELLE-TIP RH DE-ICE BOOT	1	4.0
3	25S-7D5057-05		HORIZONTAL STABILIZER LH DE-ICE BOOT	1	2.3
4	25S-7D5057-06		HORIZONTAL STABILIZER RH DE-ICE BOOT	1	2.3
5	25S-7D5057-10		VERTICAL STABILIZER DE-ICE BOOT	1	1.0

FASTboot® DE-ICE BOOTS

POSITION ID	GOODRICH PART NUMBER	AIRCRAFT OEM P/N	DESCRIPTION	QTY PER AIRCRAFT	WT
1	P25S-7D5057-11		FASTBOOT® NACELLE-TIP LH DE-ICE BOOT	1	4.0
2	P25S-7D5057-12		FASTBOOT® NACELLE-TIP RH DE-ICE BOOT	1	4.0
3	P25S-7D5057-05		FASTBOOT® HORIZONTAL STABILIZER LH DE-ICE BOOT	1	2.3
4	P25S-7D5057-06		FASTBOOT® HORIZONTAL STABILIZER RH DE-ICE BOOT	1	2.3
5	P25S-7D5057-10		FASTBOOT® VERTICAL STABILIZER DE-ICE BOOT	1	1.0

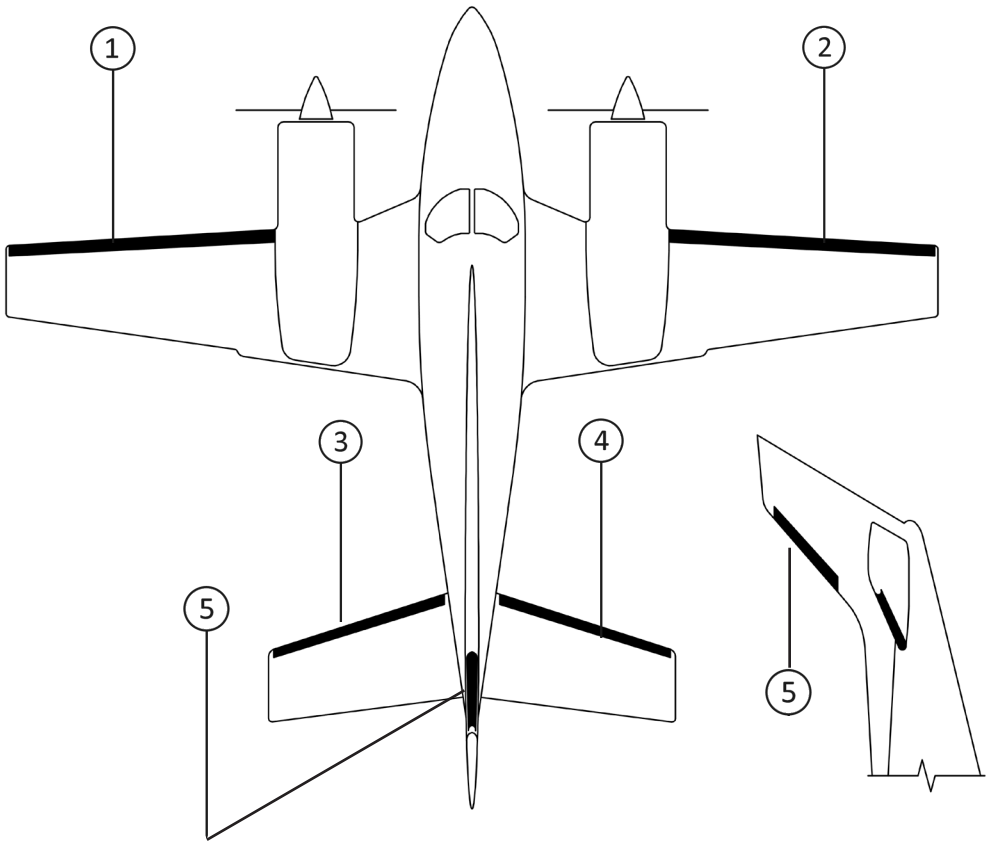

BEECHCRAFT 65 (QUEEN AIR)

STANDARD DE-ICE BOOTS

POSITION ID	GOODRICH PART NUMBER	AIRCRAFT OEM P/N	DESCRIPTION	QTY PER AIRCRAFT	WT
1	23S-2014-1-1	50-380139-9	NACELLE-LIGHT LH DE-ICE BOOT	1	4.1
2	23S-2014-1-2	50-380139-10	NACELLE-LIGHT RH DE-ICE BOOT	1	4.1
3	23S-2014-2-1	50-380139-7	LIGHT-TIP LH DE-ICE BOOT	1	5.3
4	23S-2014-2-2	50-380139-8	LIGHT-TIP RH DE-ICE BOOT	1	5.3
5	23S-2014-9-1	50-380139-4	HORIZONTAL STABILIZER LH/RH DE-ICE BOOT	2	2.9
6	23S-2014-10-1	50-380139-3	VERTICAL STABILIZER DE-ICE BOOT	1	2.1

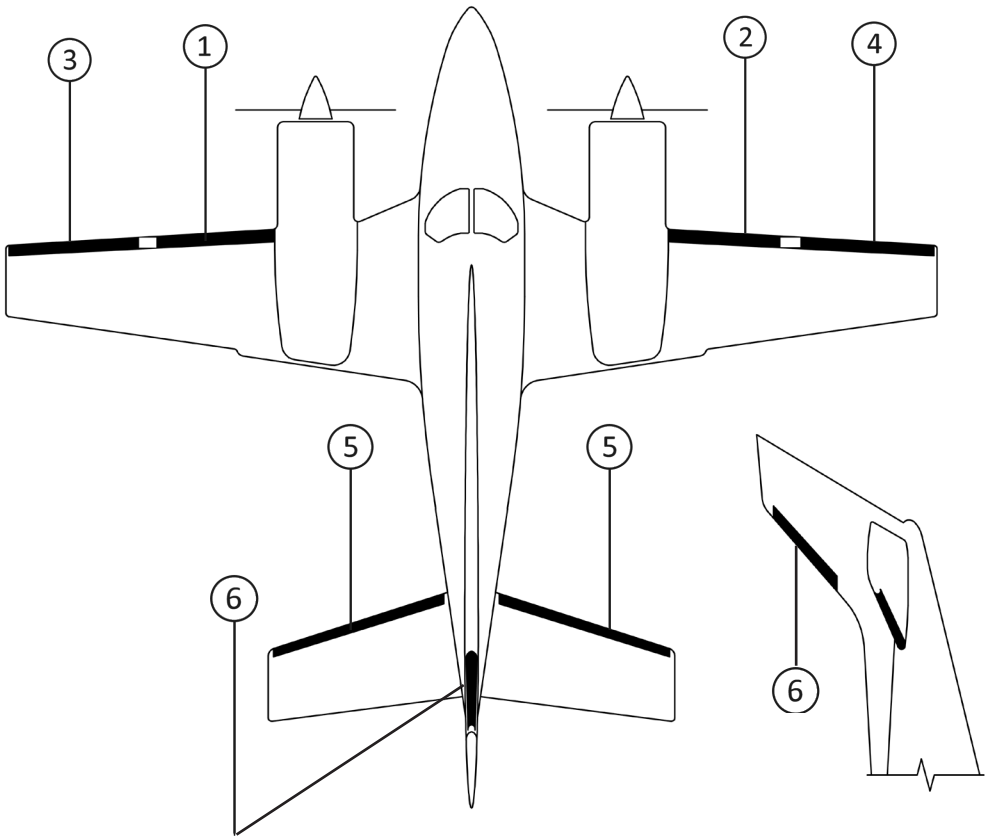

BEECHCRAFT A65 (QUEEN AIR)

STANDARD DE-ICE BOOTS

POSITION ID	GOODRICH PART NUMBER	AIRCRAFT OEM P/N	DESCRIPTION	QTY PER AIRCRAFT	WT
1	23S-2014-1-1	50-380139-9	NACELLE-LIGHT LH DE-ICE BOOT	1	4.1
2	23S-2014-1-2	50-380139-10	NACELLE-LIGHT RH DE-ICE BOOT	1	4.1
3	23S-2014-2-1	50-380139-7	LIGHT-TIP LH DE-ICE BOOT	1	5.3
4	23S-2014-2-2	50-380139-8	LIGHT-TIP RH DE-ICE BOOT	1	5.3
5	23S-2014-9-1	50-380139-4	HORIZONTAL STABILIZER LH/RH DE-ICE BOOT	2	2.9
6	23S-2014-10-1	50-380139-3	VERTICAL STABILIZER DE-ICE BOOT	1	2.1

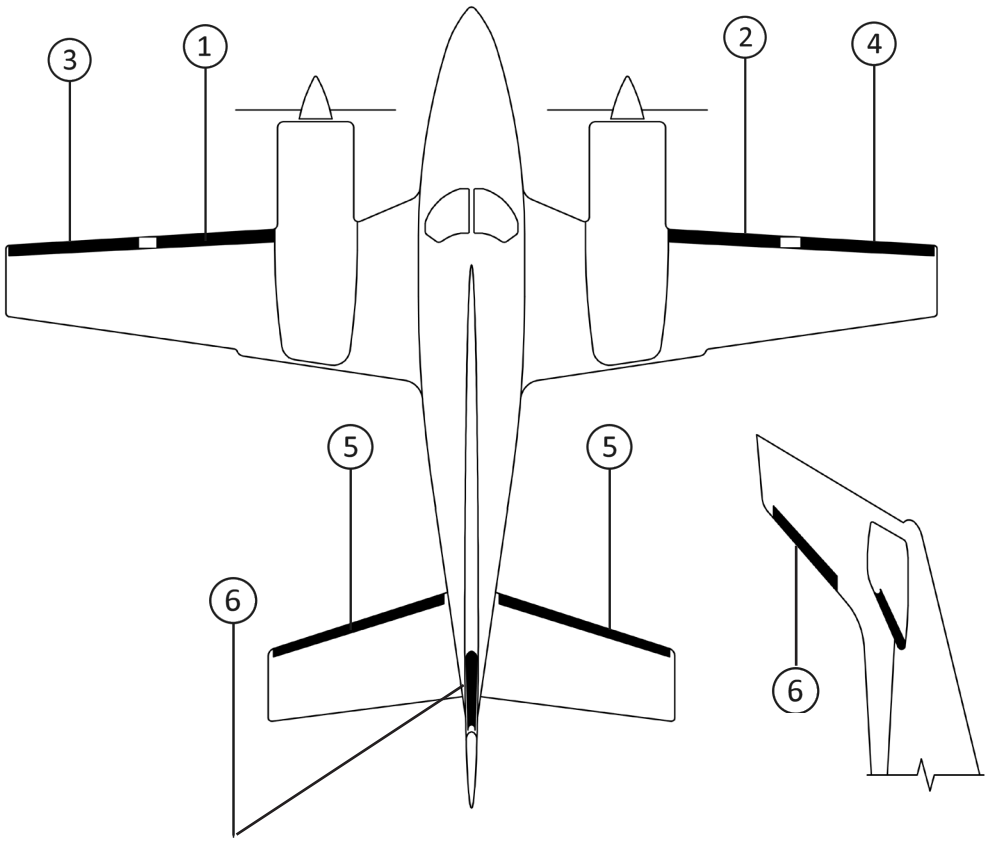

BEECHCRAFT 65-A80 (QUEEN AIR)

STANDARD DE-ICE BOOTS

POSITION ID	GOODRICH PART NUMBER	AIRCRAFT OEM P/N	DESCRIPTION	QTY PER AIRCRAFT	WT
1	23S-2014-11-1	50-380139-1	BREAK-LIGHT LH DE-ICE BOOT	1	6.6
2	23S-2014-11-2	50-380139-2	BREAK-LIGHT RH DE-ICE BOOT	1	6.6
3	23S-2014-12-1	50-380139-5	LIGHT-TIP LH DE-ICE BOOT	1	1.2
4	23S-2014-12-2	50-380139-6	LIGHT-TIP RH DE-ICE BOOT	1	1.2
5	23S-2014-9-1	50-380139-4	HORIZONTAL STABILIZER LH/RH DE-ICE BOOT	2	2.9
6	23S-2014-10-1	50-380139-3	VERTICAL STABILIZER DE-ICE BOOT	1	2.1

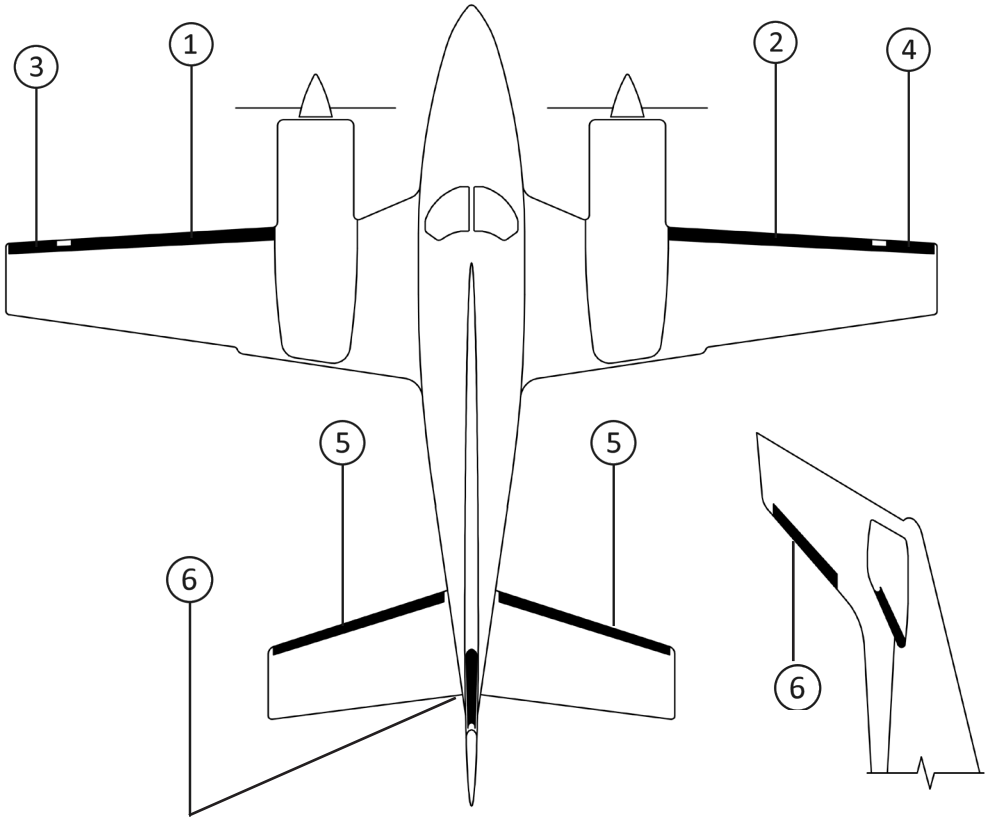

BEECHCRAFT 65-A80-8800 (QUEEN AIR)

STANDARD DE-ICE BOOTS

POSITION ID	GOODRICH PART NUMBER	AIRCRAFT OEM P/N	DESCRIPTION	QTY PER AIRCRAFT	WT
1	23S-2014-11-1	50-380139-1	BREAK-LIGHT LH DE-ICE BOOT	1	6.6
2	23S-2014-11-2	50-380139-2	BREAK-LIGHT RH DE-ICE BOOT	1	6.6
3	23S-2014-12-1	50-380139-5	LIGHT-TIP LH DE-ICE BOOT	1	1.2
4	23S-2014-12-2	50-380139-6	LIGHT-TIP RH DE-ICE BOOT	1	1.2
5	23S-2014-9-1	50-380139-4	HORIZONTAL STABILIZER LH/RH DE-ICE BOOT	2	2.9
6	23S-2014-10-1	50-380139-3	VERTICAL STABILIZER DE-ICE BOOT	1	2.1

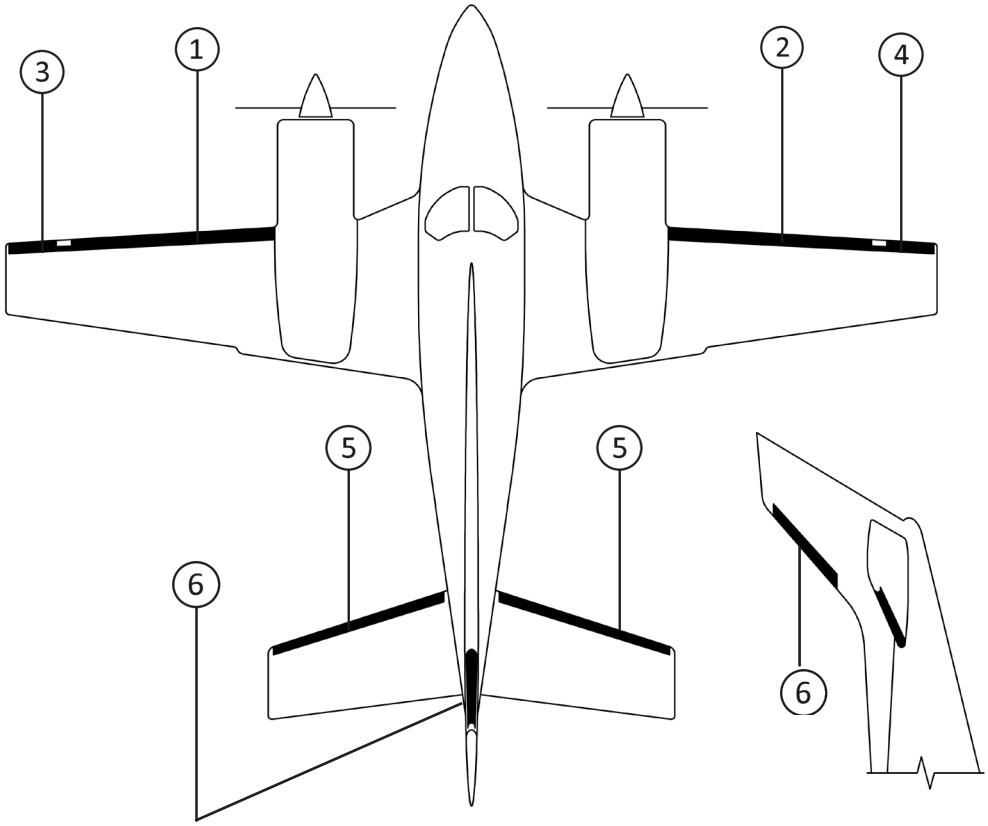

BEECHCRAFT 65-B80 (QUEEN AIR)

STANDARD DE-ICE BOOTS

POSITION ID	GOODRICH PART NUMBER	AIRCRAFT OEM P/N	DESCRIPTION	QTY PER AIRCRAFT	WT
1	23S-2014-11-1	50-380139-1	BREAK-LIGHT LH DE-ICE BOOT	1	6.6
2	23S-2014-11-2	50-380139-2	BREAK-LIGHT RH DE-ICE BOOT	1	6.6
3	23S-2014-15-1	50-380139-13	LIGHT-TIP LH DE-ICE BOOT	1	1.0
4	23S-2014-15-2	50-380139-14	LIGHT-TIP RH DE-ICE BOOT	1	1.0
5	23S-2014-9-1	50-380139-4	HORIZONTAL STABILIZER LH/RH DE-ICE BOOT	2	2.9
6	23S-2014-10-1	50-380139-3	VERTICAL STABILIZER DE-ICE BOOT	1	2.1

OPTIONAL STANDARD DE-ICE BOOTS

POSITION ID	GOODRICH PART NUMBER	AIRCRAFT OEM P/N	DESCRIPTION	QTY PER AIRCRAFT	WT
3	23S-2014-12-1*	50-380139-5	LIGHT-TIP LH DE-ICE BOOT	1	1.2
4	23S-2014-12-2*	50-380139-6	LIGHT-TIP RH DE-ICE BOOT	1	1.2

*PART NUMBERS 23S-2014-12-1, -12-2 ARE USED ON AIRCRAFT WITHOUT STROBE LIGHT

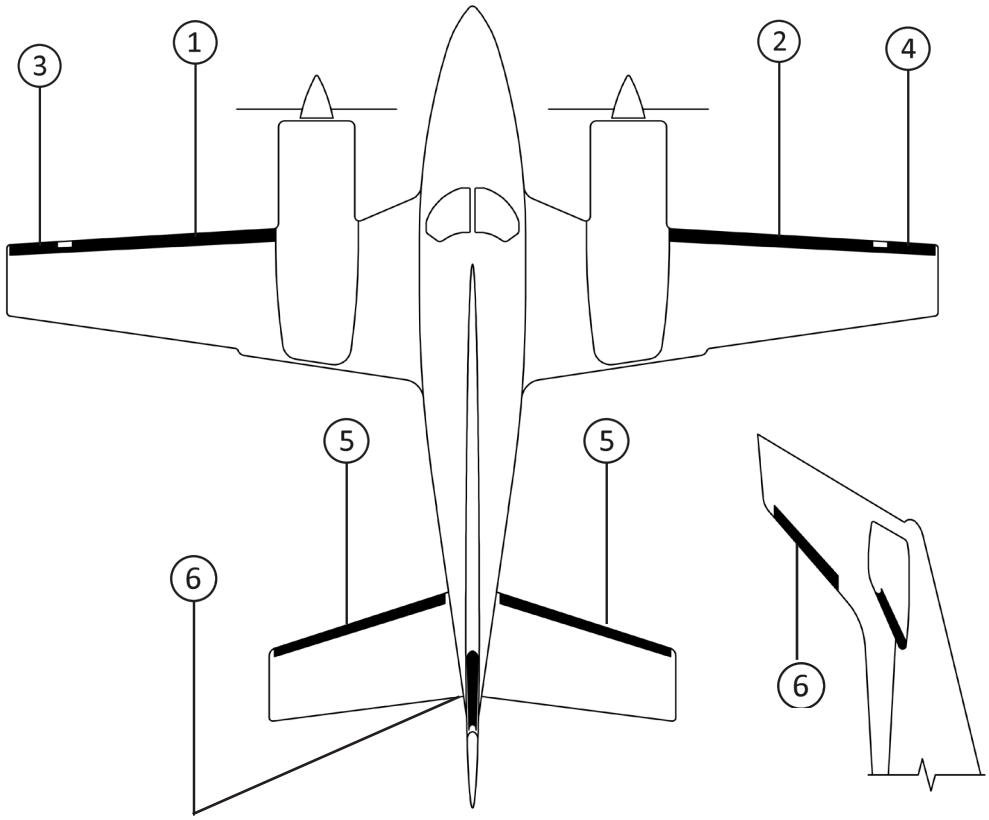

BEECHCRAFT 65-88 (QUEEN AIR)

STANDARD DE-ICE BOOTS

POSITION ID	GOODRICH PART NUMBER	AIRCRAFT OEM P/N	DESCRIPTION	QTY PER AIRCRAFT	WT
1	23S-2014-11-1	50-380139-1	BREAK-LIGHT LH DE-ICE BOOT	1	6.6
2	23S-2014-11-2	50-380139-2	BREAK-LIGHT RH DE-ICE BOOT	1	6.6
3	23S-2014-15-1	50-380139-13	LIGHT-TIP LH DE-ICE BOOT	1	1.0
4	23S-2014-15-2	50-380139-14	LIGHT-TIP RH DE-ICE BOOT	1	1.0
5	23S-2014-9-1	50-380139-4	HORIZONTAL STABILIZER LH/RH DE-ICE BOOT	2	2.9
6	23S-2014-10-1	50-380139-3	VERTICAL STABILIZER DE-ICE BOOT	1	2.1

OPTIONAL STANDARD DE-ICE BOOTS

POSITION ID	GOODRICH PART NUMBER	AIRCRAFT OEM P/N	DESCRIPTION	QTY PER AIRCRAFT	WT
3	23S-2014-12-1*	50-380139-5	LIGHT-TIP LH DE-ICE BOOT	1	1.2
4	23S-2014-12-2*	50-380139-6	LIGHT-TIP RH DE-ICE BOOT	1	1.2

*PART NUMBERS 23S-2014-12-1, -12-2 ARE USED ON AIRCRAFT WITHOUT STROBE LIGHT

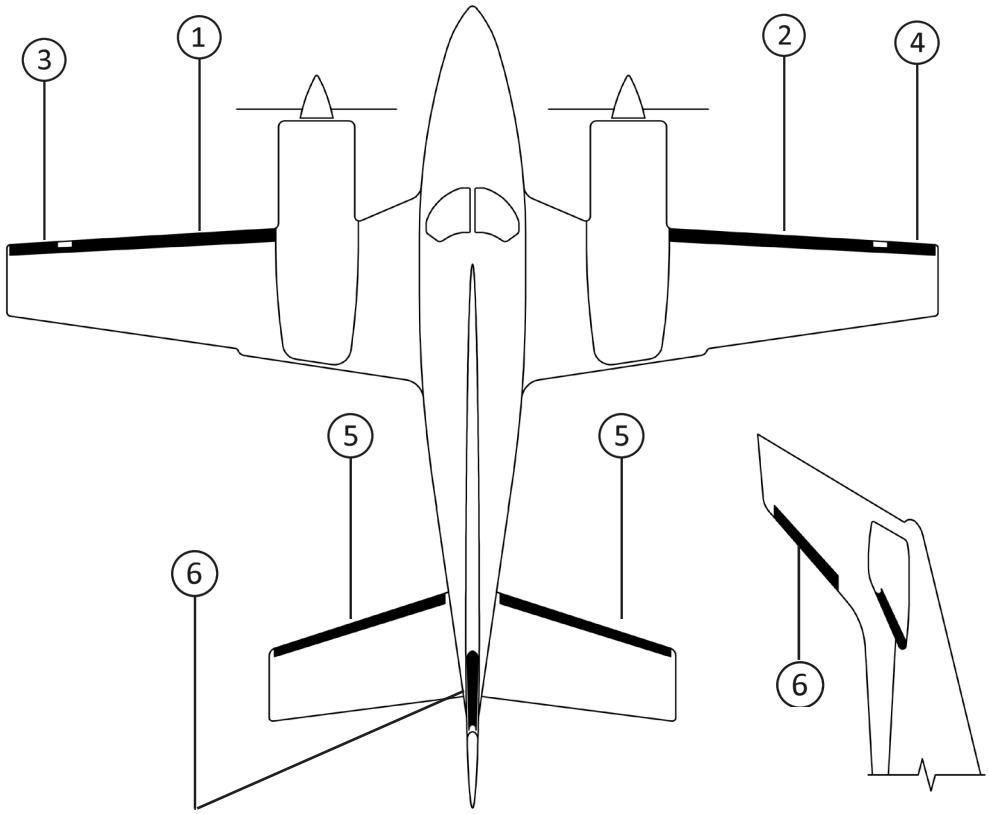

BEECHCRAFT 65-90 (KING AIR)

STANDARD DE-ICE BOOTS

POSITION ID	GOODRICH PART NUMBER	AIRCRAFT OEM P/N	DESCRIPTION	QTY PER AIRCRAFT	WT
1	23S-2014-11-1	50-380139-1	BREAK-LIGHT LH DE-ICE BOOT	1	6.6
2	23S-2014-11-2	50-380139-2	BREAK-LIGHT RH DE-ICE BOOT	1	6.6
3	23S-2014-9-1	50-380139-4	HORIZONTAL STABILIZER LH/RH DE-ICE BOOT	2	2.9
4	23S-2014-10-1	50-380139-3	VERTICAL STABILIZER DE-ICE BOOT	1	2.1
5	5E1319	50-389028	ENGINE INLET ANTI-ICER	2	

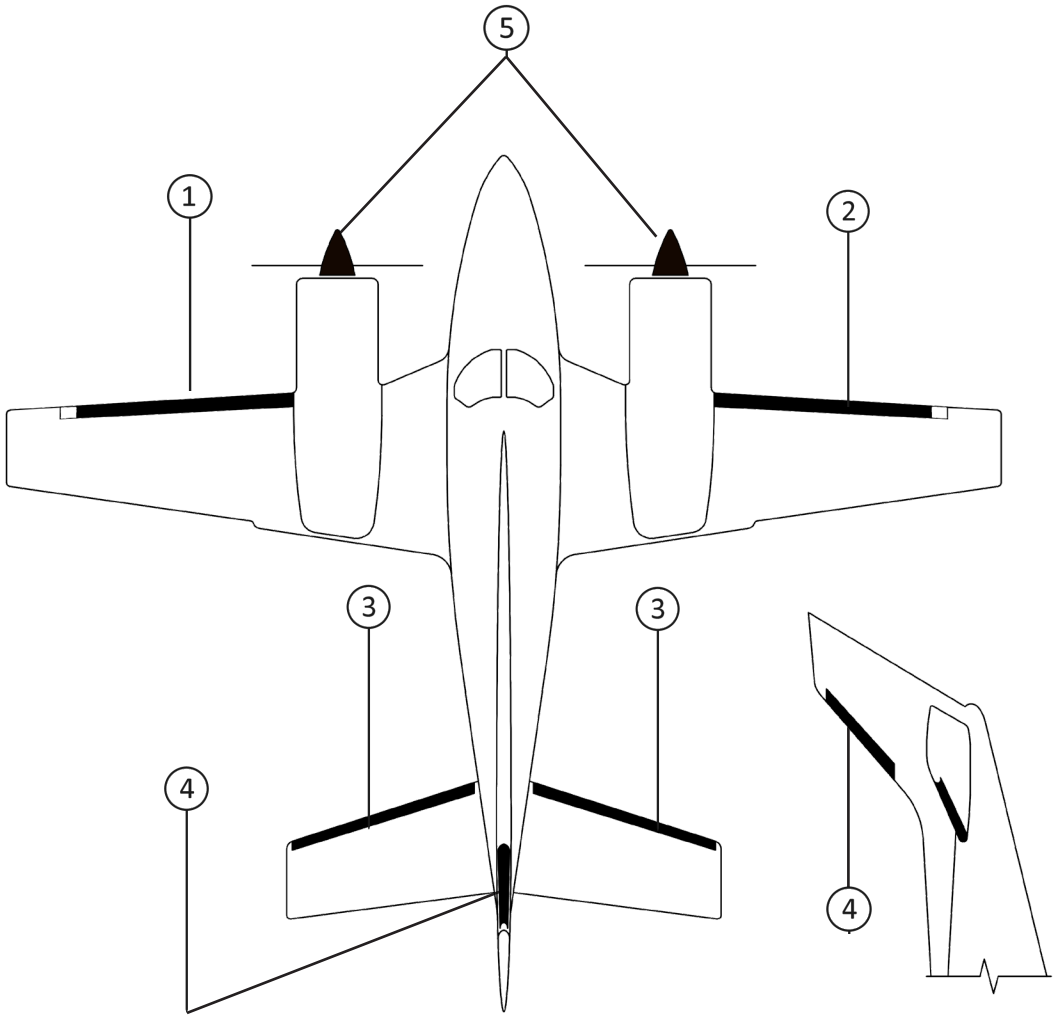

BEECHCRAFT 65-A90 (KING AIR)

STANDARD DE-ICE BOOTS

POSITION ID	GOODRICH PART NUMBER	AIRCRAFT OEM P/N	DESCRIPTION	QTY PER AIRCRAFT	WT
1	23S-2014-11-1	50-380139-1	BREAK-LIGHT LH DE-ICE BOOT	1	6.6
2	23S-2014-11-2	50-380139-2	BREAK-LIGHT RH DE-ICE BOOT	1	6.6
3	23S-2014-15-1	50-380139-13	LIGHT-TIP LH DE-ICE BOOT	1	1.0
4	23S-2014-15-2	50-380139-14	LIGHT-TIP RH DE-ICE BOOT	1	1.0
5	23S-2014-9-1	50-380139-4	HORIZONTAL STABILIZER LH/RH DE-ICE BOOT	2	2.9
6	23S-2014-10-1	50-380139-3	VERTICAL STABILIZER DE-ICE BOOT	1	2.1
7	5E1319	50-389028	ENGINE INLET ANTI-ICER	2	

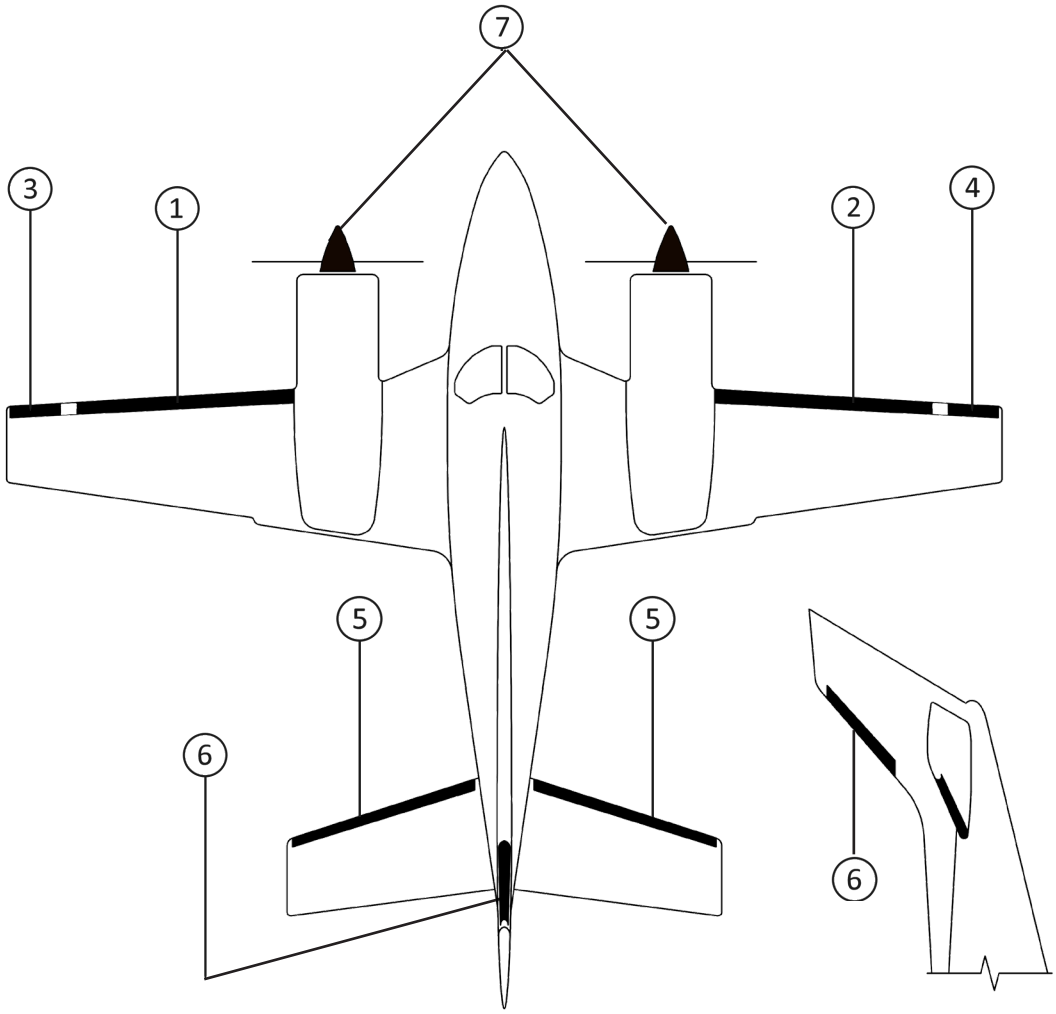

BEECHCRAFT 65-A90-1 (KING AIR)

STANDARD DE-ICE BOOTS

POSITION ID	GOODRICH PART NUMBER	AIRCRAFT OEM P/N	DESCRIPTION	QTY PER AIRCRAFT	WT
1	23S-2014-11-1	50-380139-1	BREAK-LIGHT LH DE-ICE BOOT	1	6.6
2	23S-2014-11-2	50-380139-2	BREAK-LIGHT RH DE-ICE BOOT	1	6.6
3	23S-2014-12-1	50-380139-5	LIGHT-TIP LH DE-ICE BOOT	1	1.2
4	23S-2014-12-2	50-380139-6	LIGHT-TIP RH DE-ICE BOOT	1	1.2
5	23S-2014-9-1	50-380139-4	HORIZONTAL STABILIZER LH/RH DE-ICE BOOT	2	2.9
6	23S-2014-10-1	50-380139-3	VERTICAL STABILIZER DE-ICE BOOT	1	2.1

OPTIONAL STANDARD DE-ICE BOOTS

POSITION ID	GOODRICH PART NUMBER	AIRCRAFT OEM P/N	DESCRIPTION	QTY PER AIRCRAFT	WT
3	23S-2014-22-1		LIGHT-TIP LH DE-ICE BOOT (WITH TWO ANTENNA CUTOUTS)	1	1.0
3	23S-2014-23-1		LIGHT-TIP LH DE-ICE BOOT	1	0.8
4	23S-2014-22-2		LIGHT-TIP RH DE-ICE BOOT (WITH TWO ANTENNA CUTOUTS)	1	1.0
4	23S-2014-23-2		LIGHT-TIP RH DE-ICE BOOT	1	0.8

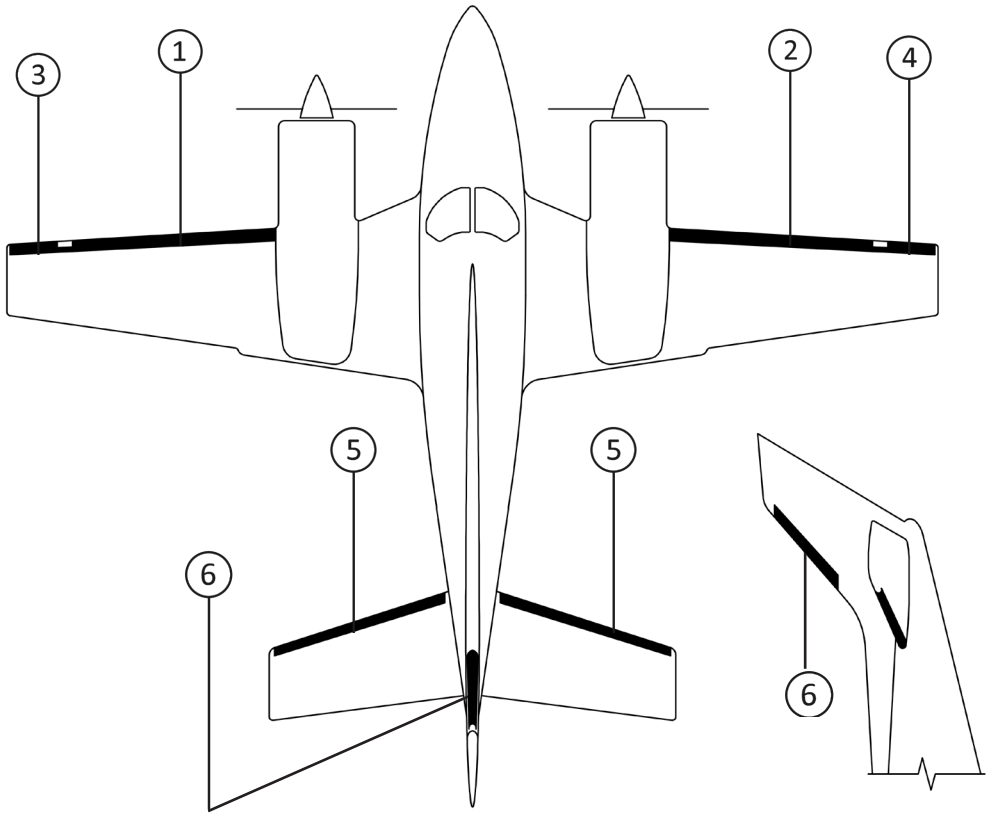

BEECHCRAFT 65-A90-2 (KING AIR)

STANDARD DE-ICE BOOTS

POSITION ID	GOODRICH PART NUMBER	AIRCRAFT OEM P/N	DESCRIPTION	QTY PER AIRCRAFT	WT
1	23S-2014-11-1*	50-380139-1	BREAK-LIGHT LH DE-ICE BOOT	1	6.6
2	23S-2014-13-1	50-380139-11	BREAK-LIGHT LH DE-ICE BOOT	1	6.6
3	23S-2014-11-2*	50-380139-2	BREAK-LIGHT RH DE-ICE BOOT	1	6.6
4	23S-2014-13-2	50-380139-12	BREAK-LIGHT RH DE-ICE BOOT	1	6.6
5	23S-2014-9-1	50-380139-4	HORIZONTAL STABILIZER LH/RH DE-ICE BOOT	2	2.9
6	23S-2014-10-1	50-380139-3	VERTICAL STABILIZER DE-ICE BOOT	1	2.1

*23S-2011-11-1/-2 HAVE A CUTOUT (TO BE MADE AT INSTALLATION) FOR THE PITOT MAST

OPTIONAL STANDARD DE-ICE BOOTS

POSITION ID	GOODRICH PART NUMBER	AIRCRAFT OEM P/N	DESCRIPTION	QTY PER AIRCRAFT	WT
3	23S-2014-22-1		LIGHT-TIP LH DE-ICE BOOT (WITH TWO ANTENNA CUTOUTS)	1	1.0
3	23S-2014-23-1		LIGHT-TIP LH DE-ICE BOOT	1	0.8
4	23S-2014-22-2		LIGHT-TIP RH DE-ICE BOOT (WITH TWO ANTENNA CUTOUTS)	1	1.0
4	23S-2014-23-2		LIGHT-TIP RH DE-ICE BOOT	1	0.8

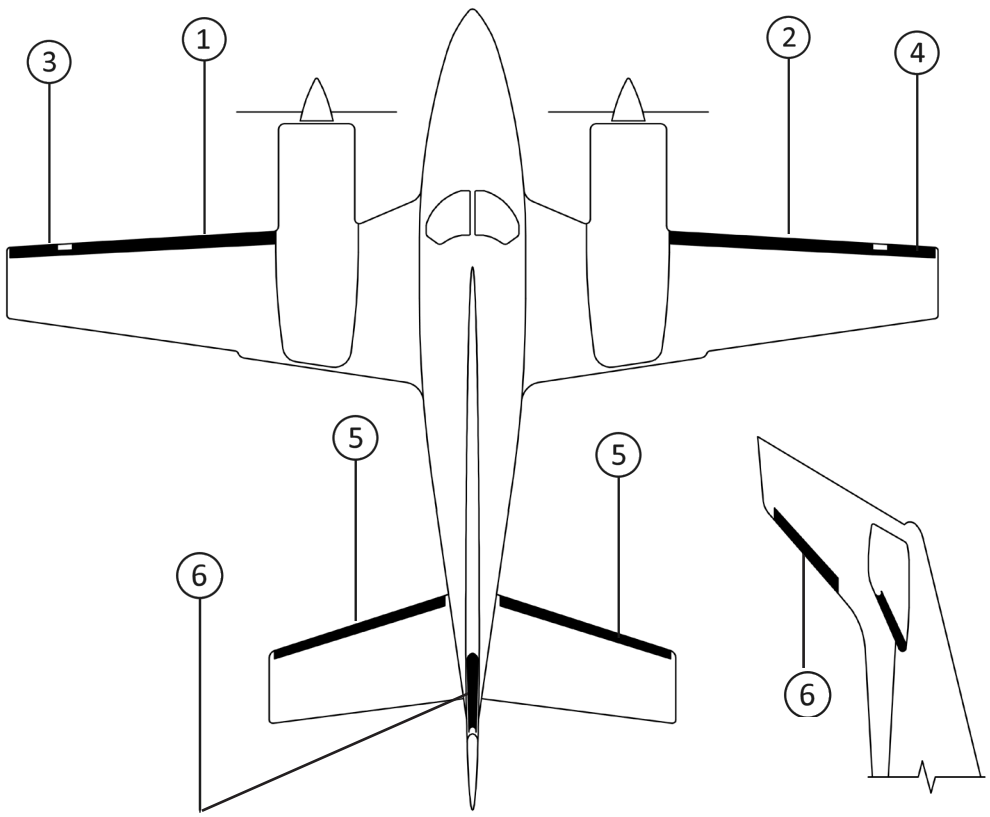

BEECHCRAFT 65-A90-3 (KING AIR)

STANDARD DE-ICE BOOTS

POSITION ID	GOODRICH PART NUMBER	AIRCRAFT OEM P/N	DESCRIPTION	QTY PER AIRCRAFT	WT
1	23S-2014-13-1	50-380139-11	BREAK-LIGHT LH DE-ICE BOOT	1	6.6
2	23S-2014-13-2	50-380139-12	BREAK-LIGHT RH DE-ICE BOOT	1	6.6
5	23S-2014-9-1	50-380139-4	HORIZONTAL STABILIZER LH/RH DE-ICE BOOT	2	2.9
6	23S-2014-10-1	50-380139-3	VERTICAL STABILIZER DE-ICE BOOT	1	2.1

OPTIONAL STANDARD DE-ICE BOOTS

POSITION ID	GOODRICH PART NUMBER	AIRCRAFT OEM P/N	DESCRIPTION	QTY PER AIRCRAFT	WT
1	23S-2014-11-1*	50-380139-1	BREAK-LIGHT LH DE-ICE BOOT	1	6.6
2	23S-2014-11-2*	50-380139-2	BREAK-LIGHT RH DE-ICE BOOT	1	6.6
3	23S-2014-22-1		LIGHT-TIP LH DE-ICE BOOT (WITH TWO ANTENNA CUTOUTS)	1	1.0
3	23S-2014-23-1		LIGHT-TIP LH DE-ICE BOOT	1	0.8
4	23S-2014-22-2		LIGHT-TIP RH DE-ICE BOOT (WITH TWO ANTENNA CUTOUTS)	1	1.0
4	23S-2014-23-2		LIGHT-TIP RH DE-ICE BOOT	1	0.8

*23S-2011-11-1/-2 HAVE A CUTOUT (TO BE MADE AT INSTALLATION) FOR THE PITOT MAST

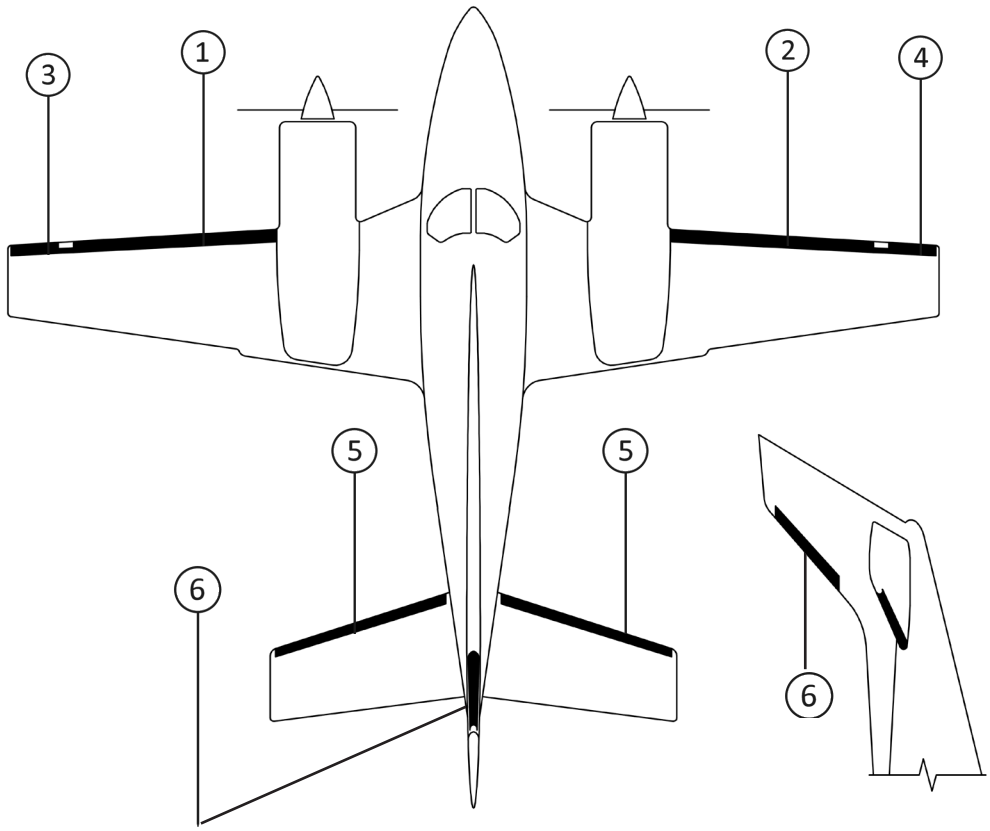

BEECHCRAFT 65-A90-4 (KING AIR)

STANDARD DE-ICE BOOTS

POSITION ID	GOODRICH PART NUMBER	AIRCRAFT OEM P/N	DESCRIPTION	QTY PER AIRCRAFT	WT
1	23S-2014-11-1	50-380139-1	BREAK-LIGHT LH DE-ICE BOOT	1	6.6
2	23S-2014-11-2	50-380139-2	BREAK-LIGHT RH DE-ICE BOOT	1	6.6
3	23S-2014-22-1		LIGHT-TIP LH DE-ICE BOOT (WITH TWO ANTENNA CUTOUTS)	1	1.0
3	23S-2014-23-1		LIGHT-TIP LH DE-ICE BOOT	1	0.8
4	23S-2014-22-2		LIGHT-TIP RH DE-ICE BOOT (WITH TWO ANTENNA CUTOUTS)	1	1.0
4	23S-2014-23-2		LIGHT-TIP RH DE-ICE BOOT	1	0.8
5	23S-2014-9-1	50-380139-4	HORIZONTAL STABILIZER LH/RH DE-ICE BOOT	2	2.9
6	23S-2014-10-1	50-380139-3	VERTICAL STABILIZER DE-ICE BOOT	1	2.1

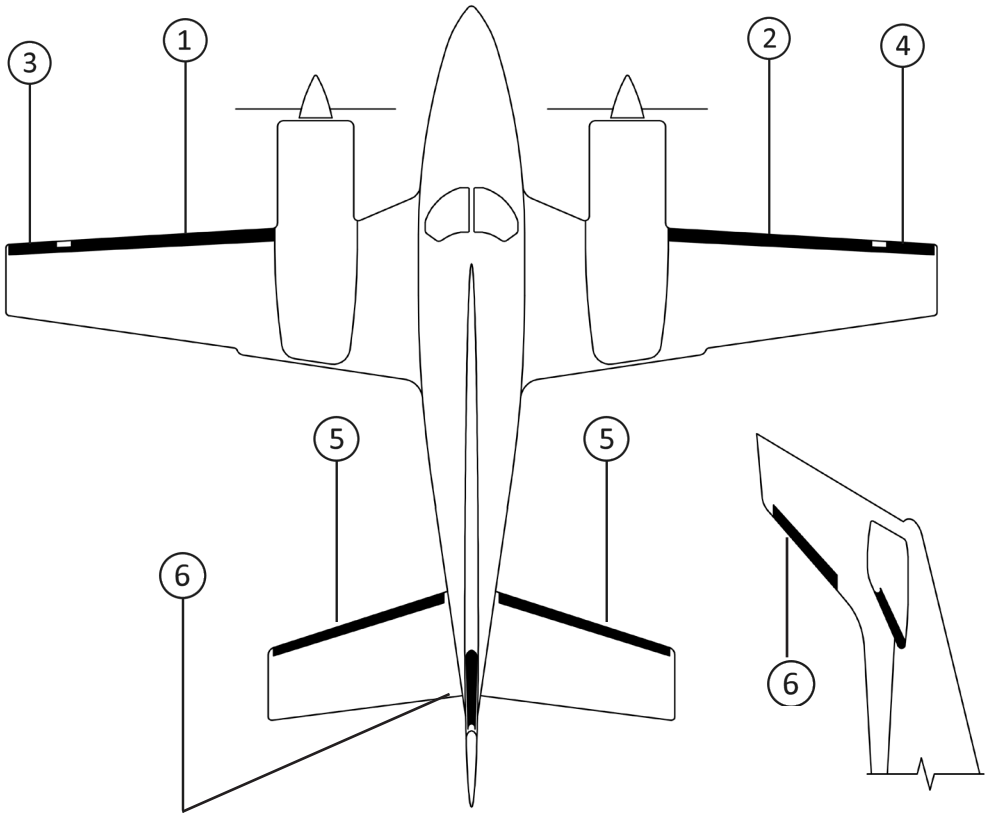

BEECHCRAFT 70 (QUEEN AIR)

STANDARD DE-ICE BOOTS

POSITION ID	GOODRICH PART NUMBER	AIRCRAFT OEM P/N	DESCRIPTION	QTY PER AIRCRAFT	WT
1	23S-2014-11-1	50-380139-1	BREAK-LIGHT LH DE-ICE BOOT	1	6.6
2	23S-2014-11-2	50-380139-2	BREAK-LIGHT RH DE-ICE BOOT	1	6.6
3	23S-2014-9-1	50-380139-4	HORIZONTAL STABILIZER LH/RH DE-ICE BOOT	2	2.9
4	23S-2014-10-1	50-380139-3	VERTICAL STABILIZER DE-ICE BOOT	1	2.1

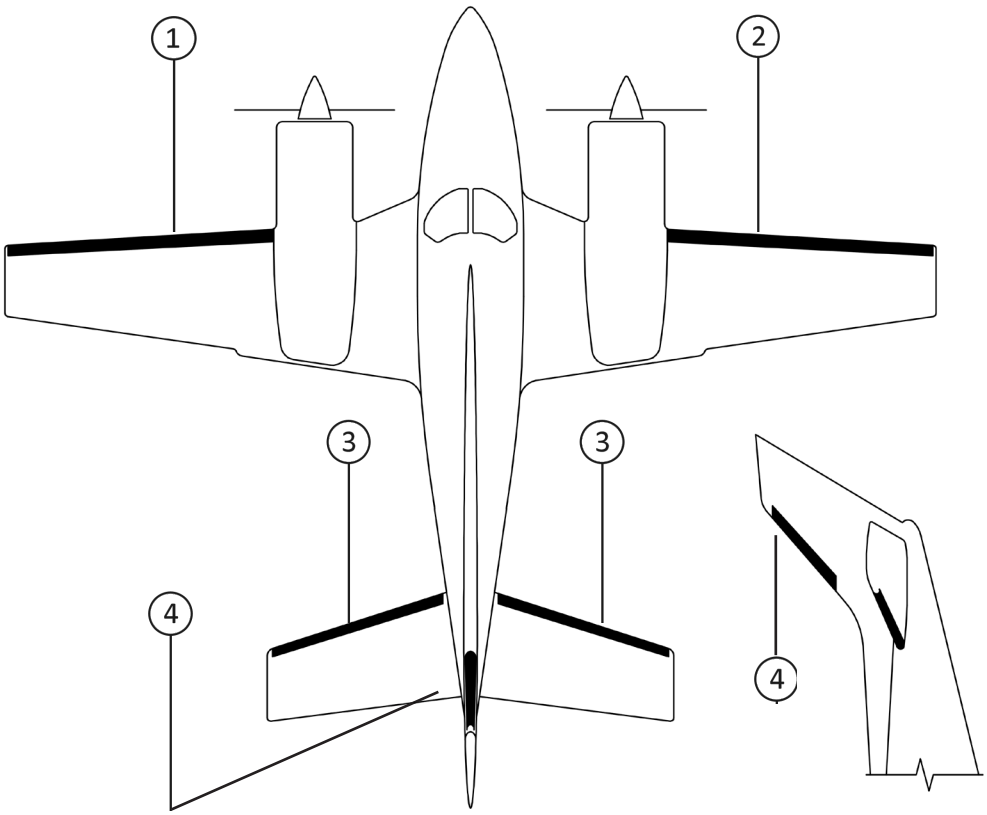

BEECHCRAFT B90 (KING AIR) S/N LJ-318 THRU LJ-376

STANDARD DE-ICE BOOTS

POSITION ID	GOODRICH PART NUMBER	AIRCRAFT OEM P/N	DESCRIPTION	QTY PER AIRCRAFT	WT
1	23S-2014-11-1	50-380139-1	BREAK-LIGHT LH DE-ICE BOOT	1	6.6
2	23S-2014-11-2	50-380139-2	BREAK-LIGHT RH DE-ICE BOOT	1	6.6
3	23S-2014-12-1*	50-380139-5	LIGHT-TIP LH DE-ICE BOOT	1	1.2
4	23S-2014-12-2*	50-380139-6	LIGHT-TIP RH DE-ICE BOOT	1	1.2
5	23S-2014-9-1	50-380139-4	HORIZONTAL STABILIZER LH/RH DE-ICE BOOT	2	2.9
6	23S-2014-10-1	50-380139-3	VERTICAL STABILIZER DE-ICE BOOT	1	2.1
7	5E1319	50-389028	ENGINE INLET ANTI-ICER	2	

*DIMENSIONS TO AIR CONNECTION 2 5/8" FROM INBOARD END

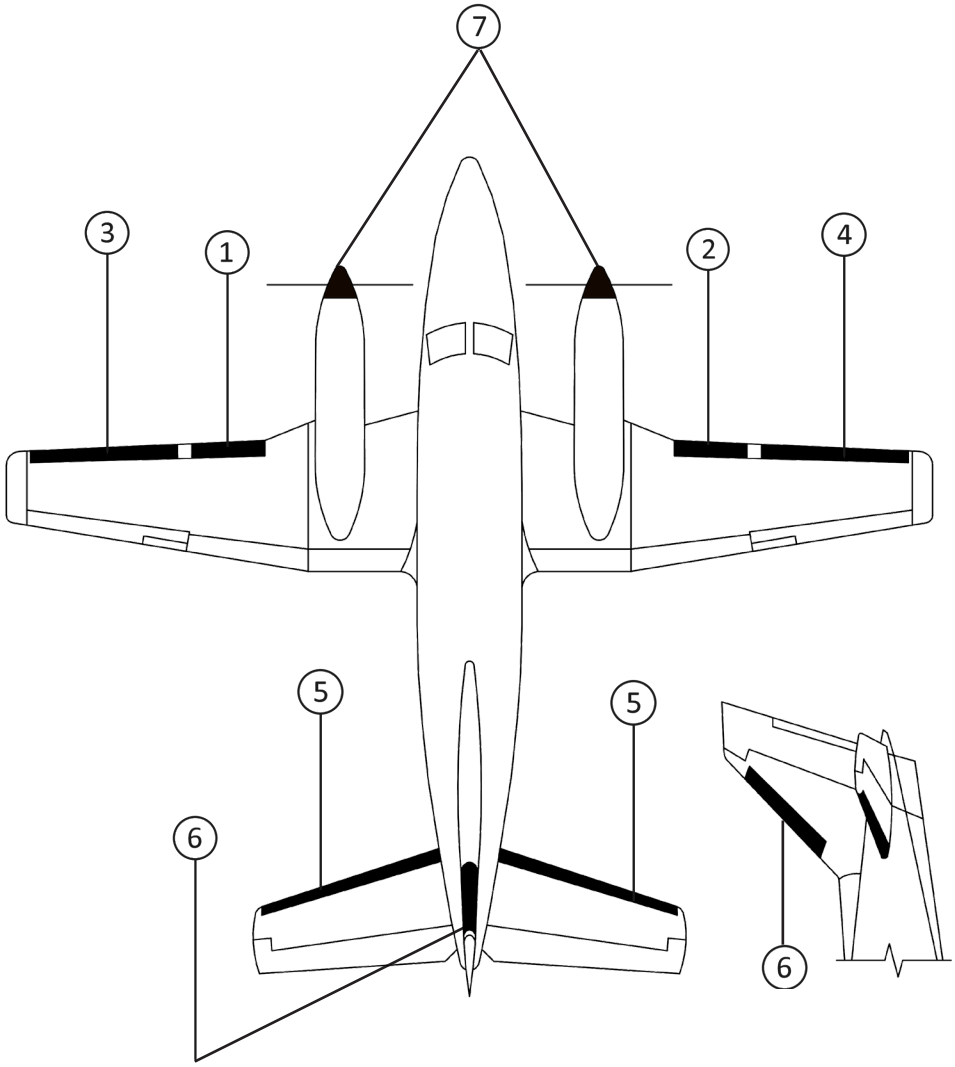

BEECHCRAFT B90 (KING AIR) S/N LJ-318 THRU LJ-501

BEECHCRAFT B90 (KING AIR) S/N LJ-318 THRU LJ-501

STANDARD DE-ICE BOOTS

POSITION ID	GOODRICH PART NUMBER	AIRCRAFT OEM P/N	DESCRIPTION	QTY PER AIRCRAFT	WT
1	23S-2014-11-1	50-380139-1	BREAK-LIGHT LH DE-ICE BOOT	1	6.6
2	23S-2014-11-2	50-380139-2	BREAK-LIGHT RH DE-ICE BOOT	1	6.6
3	23S-2014-15-1*	50-380139-13	LIGHT-TIP LH DE-ICE BOOT	1	1.0
4	23S-2014-15-2*	50-380139-14	LIGHT-TIP RH DE-ICE BOOT	1	1.0
5	23S-2014-9-1	50-380139-4	HORIZONTAL STABILIZER LH/RH DE-ICE BOOT	2	2.9
6	23S-2014-10-1	50-380139-3	VERTICAL STABILIZER DE-ICE BOOT	1	2.1
7	5E1319	50-389028	ENGINE INLET ANTI-ICER	2	

*DIMENSIONS TO AIR CONNECTION 2 1/16" FROM INBOARD END

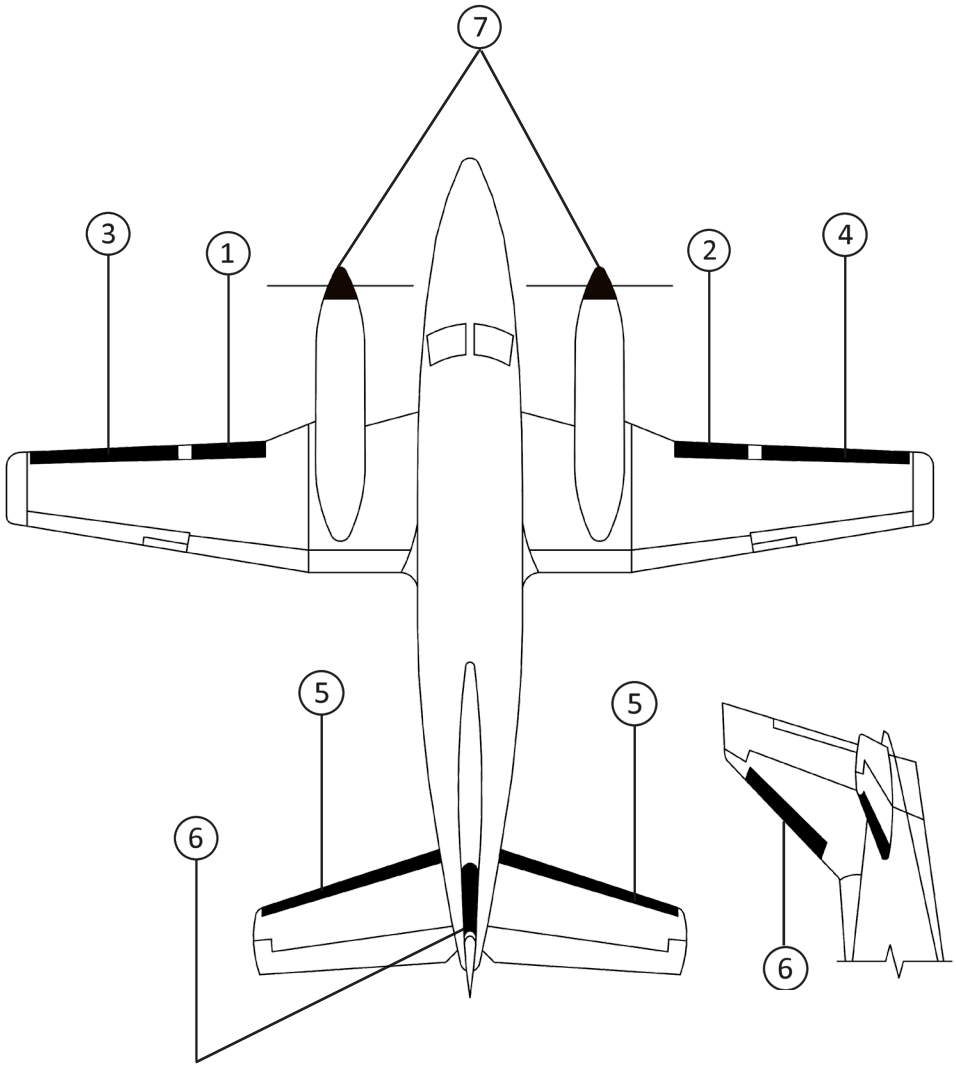

BEECHCRAFT C90 (KING AIR) S/N LJ-502 THRU LJ-577 (WITH LIGHTS)

STANDARD DE-ICE BOOTS

POSITION ID	GOODRICH PART NUMBER	AIRCRAFT OEM P/N	DESCRIPTION	QTY PER AIRCRAFT	WT
1	23S-2014-11-1	50-380139-1	BREAK-LIGHT LH DE-ICE BOOT	1	6.6
2	23S-2014-11-2	50-380139-2	BREAK-LIGHT RH DE-ICE BOOT	1	6.6
3	23S-2014-15-1	50-380139-13	LIGHT-TIP LH DE-ICE BOOT	1	1.0
4	23S-2014-15-2	50-380139-14	LIGHT-TIP RH DE-ICE BOOT	1	1.0
5	23S-2014-9-1	50-380139-4	HORIZONTAL STABILIZER LH/RH DE-ICE BOOT	2	3.0
6	23S-2014-10-1	50-380139-3	VERTICAL STABILIZER DE-ICE BOOT	1	2.1
7	5E1319	50-389028	ENGINE INLET ANTI-ICER	2	

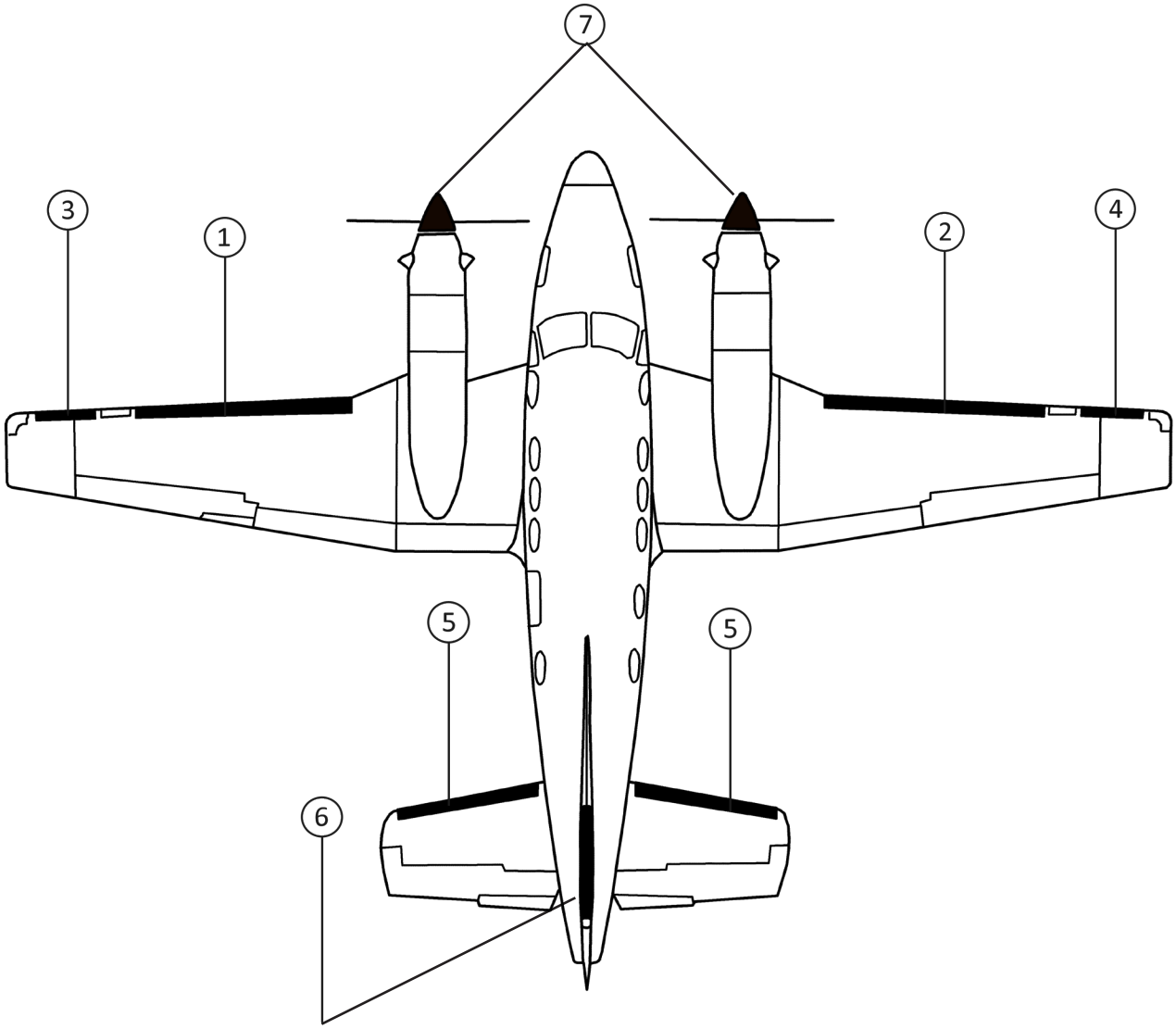

BEECHCRAFT C90 (KING AIR) S/N LJ-502 THRU LJ-624 (WITHOUT LIGHTS)

BEECHCRAFT C90 (KING AIR) S/N LJ-502 THRU LJ-624 (WITHOUT LIGHTS)

STANDARD DE-ICE BOOTS

POSITION ID	GOODRICH PART NUMBER	AIRCRAFT OEM P/N	DESCRIPTION	QTY PER AIRCRAFT	WT
1	23S-2014-20-1	50-380139-15	WING LH DE-ICE BOOT	1	7.0
2	23S-2014-20-2	50-380139-16	WING RH DE-ICE BOOT	1	7.0
3	23S-2014-9-1	50-380139-4	HORIZONTAL STABILIZER LH/RH DE-ICE BOOT	2	3.0
4	23S-2014-10-1	50-380139-3	VERTICAL STABILIZER DE-ICE BOOT	1	2.1
5	5E1319	50-389028	ENGINE INLET ANTI-ICER	2	

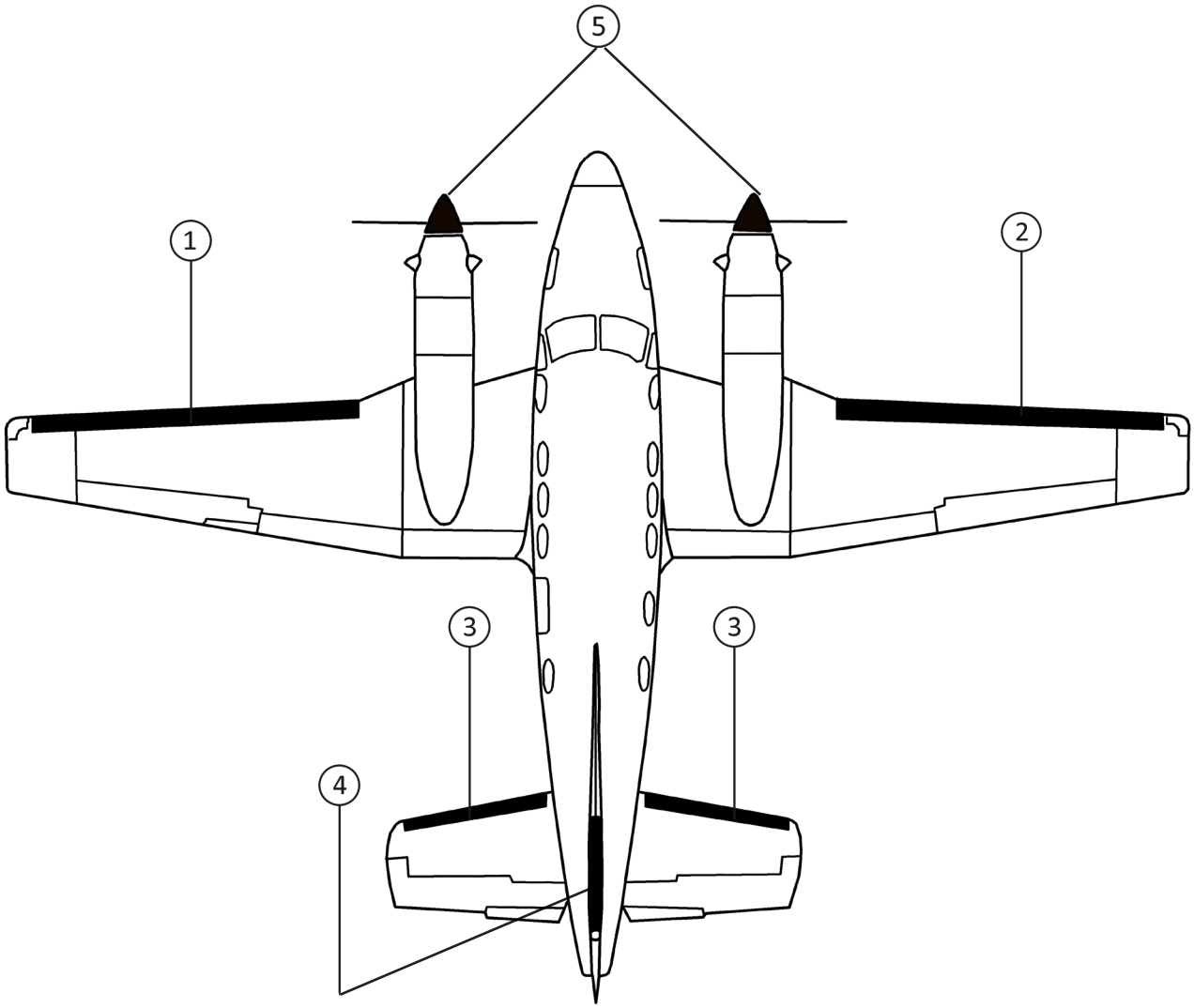

BEECHCRAFT C90 (KING AIR) S/N LJ-625 THRU LJ-639

STANDARD DE-ICE BOOTS

POSITION ID	GOODRICH PART NUMBER	AIRCRAFT OEM P/N	DESCRIPTION	QTY PER AIRCRAFT	WT
1	23S-2014-21-1	50-380139-17	WING LH DE-ICE BOOT	1	7.0
2	23S-2014-21-2	50-380139-18	WING RH DE-ICE BOOT	1	7.0
3	23S-2014-9-1	50-380139-4	HORIZONTAL STABILIZER LH/RH DE-ICE BOOT	2	3.0
4	23S-2014-10-1	50-380139-3	VERTICAL STABILIZER DE-ICE BOOT	1	2.1
5	5E1319	50-389028	ENGINE INLET ANTI-ICER	2	

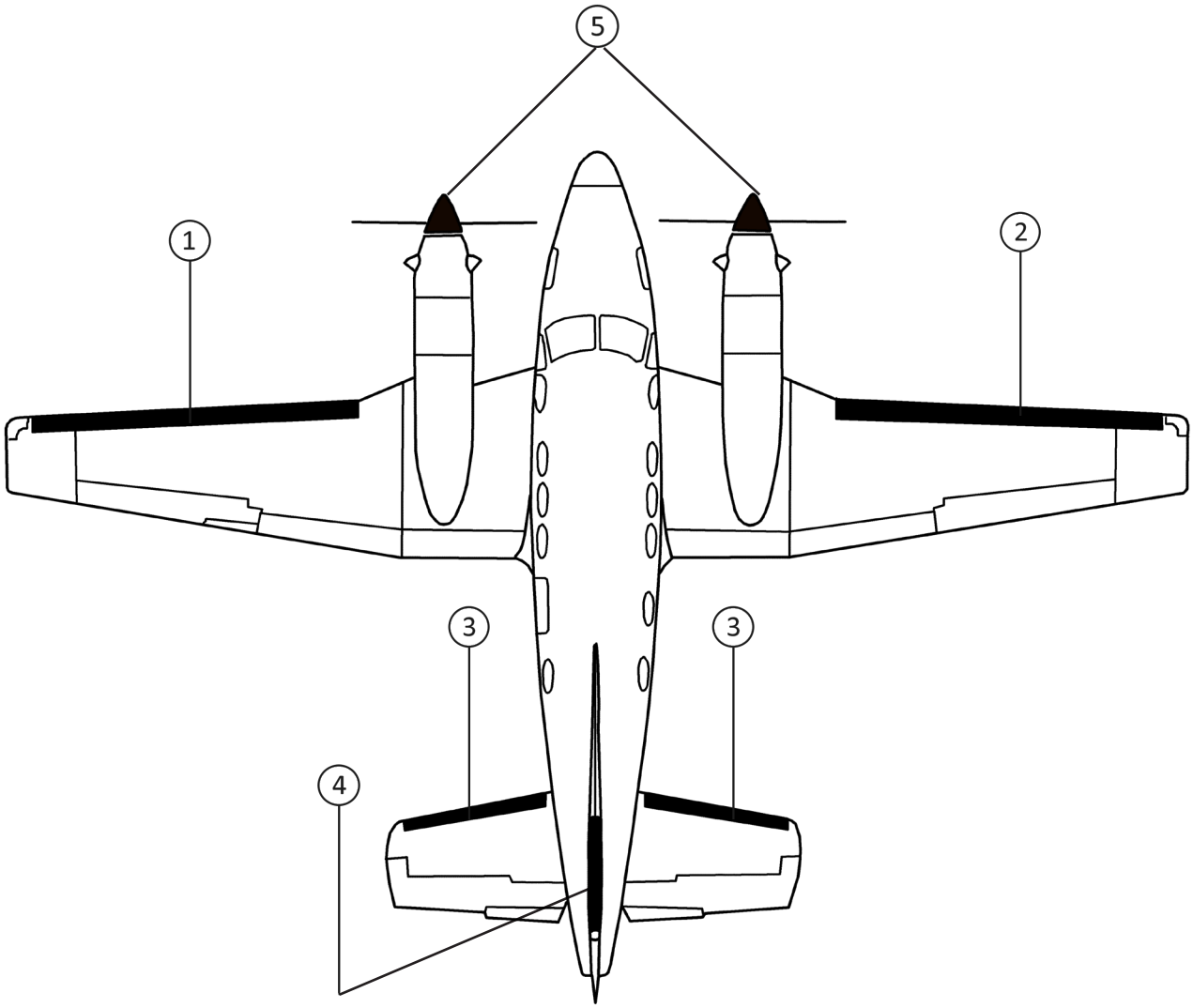

BEECHCRAFT C90 (KING AIR) S/N LJ-640 THRU LJ-658

STANDARD DE-ICE BOOTS

POSITION ID	GOODRICH PART NUMBER	AIRCRAFT OEM P/N	DESCRIPTION	QTY PER AIRCRAFT	WT
1	25S-7D5064-25		WING LH DE-ICE BOOT (REPLACES 25S-7D5064-03)	1	6.0
2	25S-7D5064-26		WING RH DE-ICE BOOT (REPLACES 25S-7D5064-04)	1	6.0
3	23S-2014-9-1	50-380139-4	HORIZONTAL STABILIZER LH/RH DE-ICE BOOT	2	3.0
4	23S-2014-10-1	50-380139-3	VERTICAL STABILIZER DE-ICE BOOT	1	2.1
5	5E1319	50-389028	ENGINE INLET ANTI-ICER	2	

FASTboot® DE-ICE BOOTS

POSITION ID	GOODRICH PART NUMBER	AIRCRAFT OEM P/N	DESCRIPTION	QTY PER AIRCRAFT	WT
1	P25S-7D5064-25		FASTBOOT® WING LH DE-ICE BOOT (REPLACES P25S-7D5064-03)	1	6.0
2	P25S-7D5064-26		FASTBOOT® WING RH DE-ICE BOOT (REPLACES P25S-7D5064-03)	1	6.0

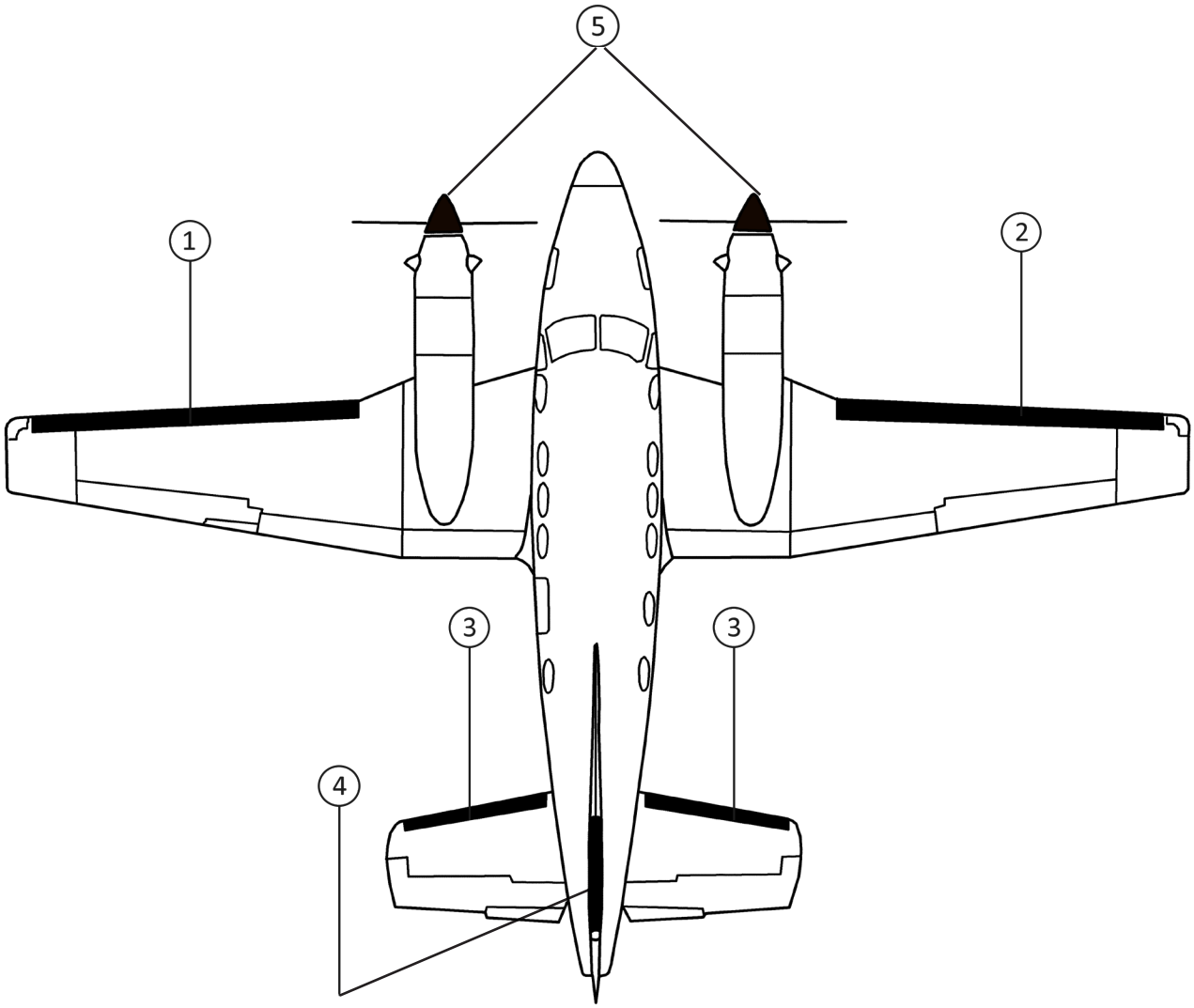

BEECHCRAFT C90 (KING AIR) S/N LJ-660 THRU LJ-1062

STANDARD DE-ICE BOOTS

POSITION ID	GOODRICH PART NUMBER	AIRCRAFT OEM P/N	DESCRIPTION	QTY PER AIRCRAFT	WT
1	25S-7D5064-25		WING LH DE-ICE BOOT REPLACES 25S-7D5064-03)	1	6.0
2	25S-7D5064-26		WING RH DE-ICE BOOT (REPLACES 25S-7D5064-04)	1	6.0
3	25S-7D5064-05		HORIZONTAL STABILIZER LH/RH DE-ICE BOOT	2	2.0
4	25S-7D5064-10		VERTICAL STABILIZER DE-ICE BOOT	1	1.5
5	5E1319	50-389028	ENGINE INLET ANTI-ICER	2	

FASTboot® DE-ICE BOOTS

POSITION ID	GOODRICH PART NUMBER	AIRCRAFT OEM P/N	DESCRIPTION	QTY PER AIRCRAFT	WT
1	P25S-7D5064-25		FASTBOOT® WING LH DE-ICE BOOT (REPLACES P25S-7D5064-03)	1	6.0
2	P25S-7D5064-26		FASTBOOT® WING RH DE-ICE BOOT (REPLACES P25S-7D5064-03)	1	6.0
3	P25S-7D5064-05		FASTBOOT® HORIZONTAL STABILIZER LH/RH DE-ICE BOOT	2	2.0
4	P25S-7D5064-10		FASTBOOT® VERTICAL STABILIZER DE-ICE BOOT	1	1.5

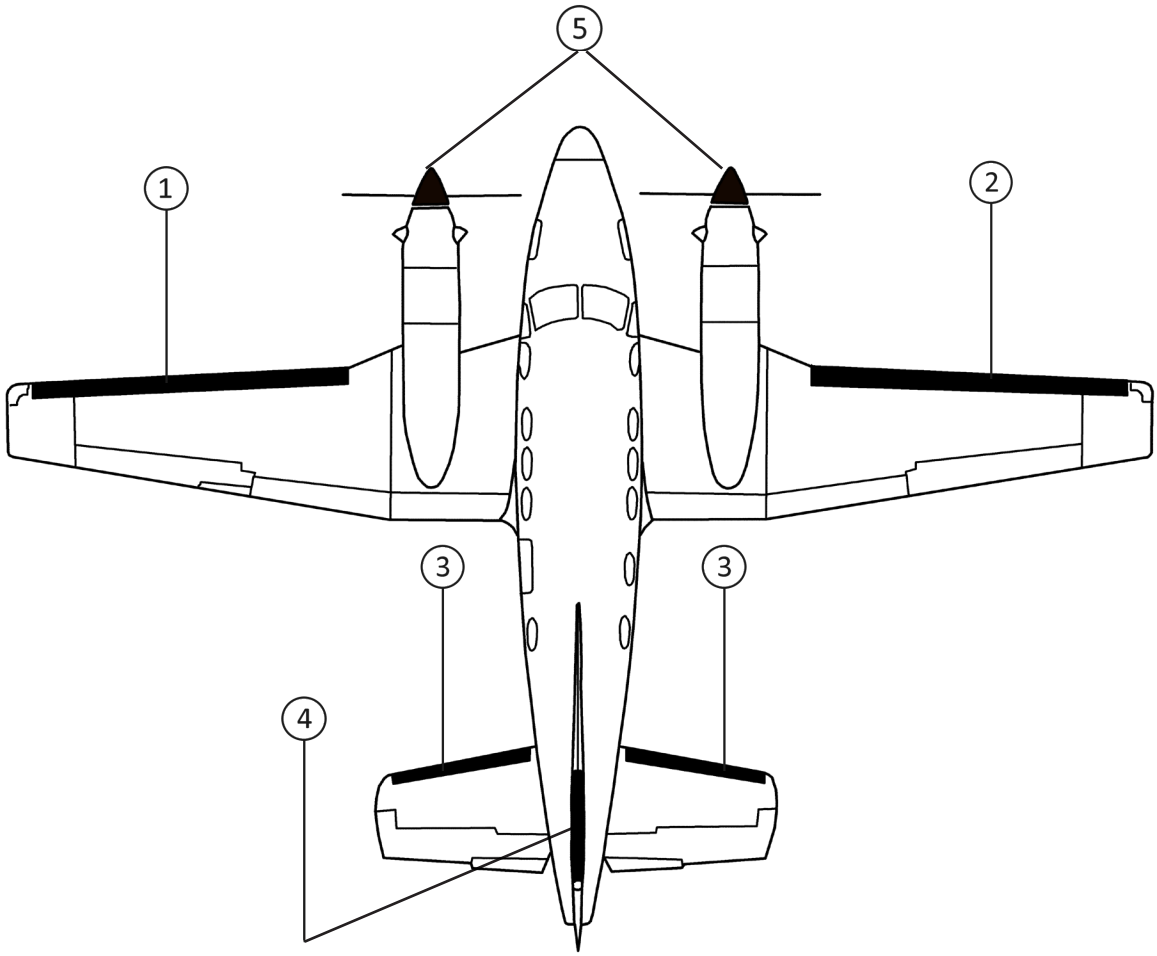

BEECHCRAFT C90A (KING AIR)

STANDARD DE-ICE BOOTS

POSITION ID	GOODRICH PART NUMBER	AIRCRAFT OEM P/N	DESCRIPTION	QTY PER AIRCRAFT	WT
1	25S-7D5064-25		WING LH DE-ICE BOOT (REPLACES 25S-7D5064-03)	1	6.0
2	25S-7D5064-26		WING RH DE-ICE BOOT (REPLACES 25S-7D5064-04)	1	6.0
3	25S-7D5064-05		HORIZONTAL STABILIZER LH/RH DE-ICE BOOT	2	2.0
4	25S-7D5064-10		VERTICAL STABILIZER DE-ICE BOOT	1	1.5

OPTIONAL STANDARD DE-ICE BOOTS

POSITION ID	GOODRICH PART NUMBER	AIRCRAFT OEM P/N	DESCRIPTION	QTY PER AIRCRAFT	WT
3	25S-7D5064-15*		HORIZONTAL STABILIZER LH/RH (ESTANE®) DE-ICE BOOT	2	2.4

*ESTANE® DE-ICERS HAVE A SURFACE PLY RESISTANT TO DIESTER TYPE ENGINE OIL

FASTboot® DE-ICE BOOTS

POSITION ID	GOODRICH PART NUMBER	AIRCRAFT OEM P/N	DESCRIPTION	QTY PER AIRCRAFT	WT
1	P25S-7D5064-25		FASTBOOT® WING LH DE-ICE BOOT (REPLACES P25S-7D5064-03)	1	6.0
2	P25S-7D5064-26		FASTBOOT® WING RH DE-ICE BOOT (REPLACES P25S-7D5064-03)	1	6.0
3	P25S-7D5064-05		FASTBOOT® HORIZONTAL STABILIZER LH/RH DE-ICE BOOT	2	2.0
4	P25S-7D5064-10		FASTBOOT® VERTICAL STABILIZER DE-ICE BOOT	1	1.5

OPTIONAL FASTboot® DE-ICE BOOTS

POSITION ID	GOODRICH PART NUMBER	AIRCRAFT OEM P/N	DESCRIPTION	QTY PER AIRCRAFT	WT
3	P25S-7D5064-15*		FASTBOOT® HORIZONTAL STABILIZER LH/RH (ESTANE®)DE-ICE BOOT	2	2.4

BEECHCRAFT C90A (KING AIR)

BEECHCRAFT C90A (KING AIR)

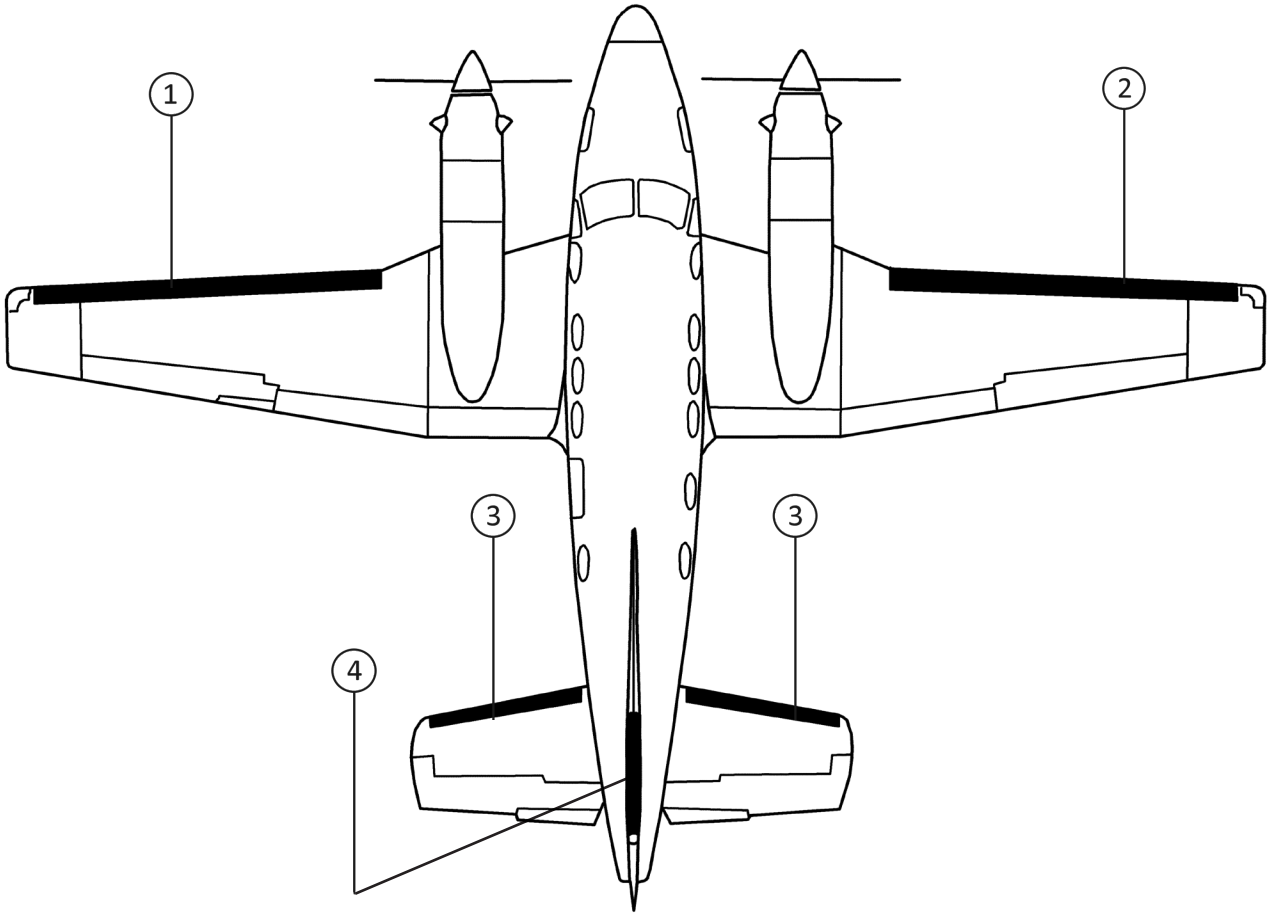

BEECHCRAFT C90B (KING AIR)

STANDARD DE-ICE BOOTS

POSITION ID	GOODRICH PART NUMBER	AIRCRAFT OEM P/N	DESCRIPTION	QTY PER AIRCRAFT	WT
1	25S-7D5064-25		WING LH DE-ICE BOOT (REPLACES 25S-7D5064-03)	1	6.0
2	25S-7D5064-26		WING RH DE-ICE BOOT (REPLACES 25S-7D5064-04)	1	6.0
3	25S-7D5064-05		HORIZONTAL STABILIZER LH/RH DE-ICE BOOT	2	2.0
4	25S-7D5064-10		VERTICAL STABILIZER DE-ICE BOOT	1	1.5

OPTIONAL STANDARD DE-ICE BOOTS

POSITION ID	GOODRICH PART NUMBER	AIRCRAFT OEM P/N	DESCRIPTION	QTY PER AIRCRAFT	WT
3	25S-7D5064-15*		HORIZONTAL STABILIZER LH/RH (ESTANE®) DE-ICE BOOT	2	2.4

*ESTANE® DE-ICERS HAVE A SURFACE PLY RESISTANT TO DIESTER TYPE ENGINE OIL

FASTboot® DE-ICE BOOTS

POSITION ID	GOODRICH PART NUMBER	AIRCRAFT OEM P/N	DESCRIPTION	QTY PER AIRCRAFT	WT
1	P25S-7D5064-25		FASTBOOT® WING LH DE-ICE BOOT (REPLACES P25S-7D5064-03)	1	6.0
2	P25S-7D5064-26		FASTBOOT® WING RH DE-ICE BOOT (REPLACES P25S-7D5064-03)	1	6.0
3	P25S-7D5064-05		FASTBOOT® HORIZONTAL STABILIZER LH/RH DE-ICE BOOT	2	2.0
4	P25S-7D5064-10		FASTBOOT® VERTICAL STABILIZER DE-ICE BOOT	1	1.5

OPTIONAL FASTboot® DE-ICE BOOTS

POSITION ID	GOODRICH PART NUMBER	AIRCRAFT OEM P/N	DESCRIPTION	QTY PER AIRCRAFT	WT
3	P25S-7D5064-15*		FASTBOOT® HORIZONTAL STABILIZER LH/RH (ESTANE®)DE-ICE BOOT	2	2.4

BEECHCRAFT C90B (KING AIR)

BEECHCRAFT C90B (KING AIR)

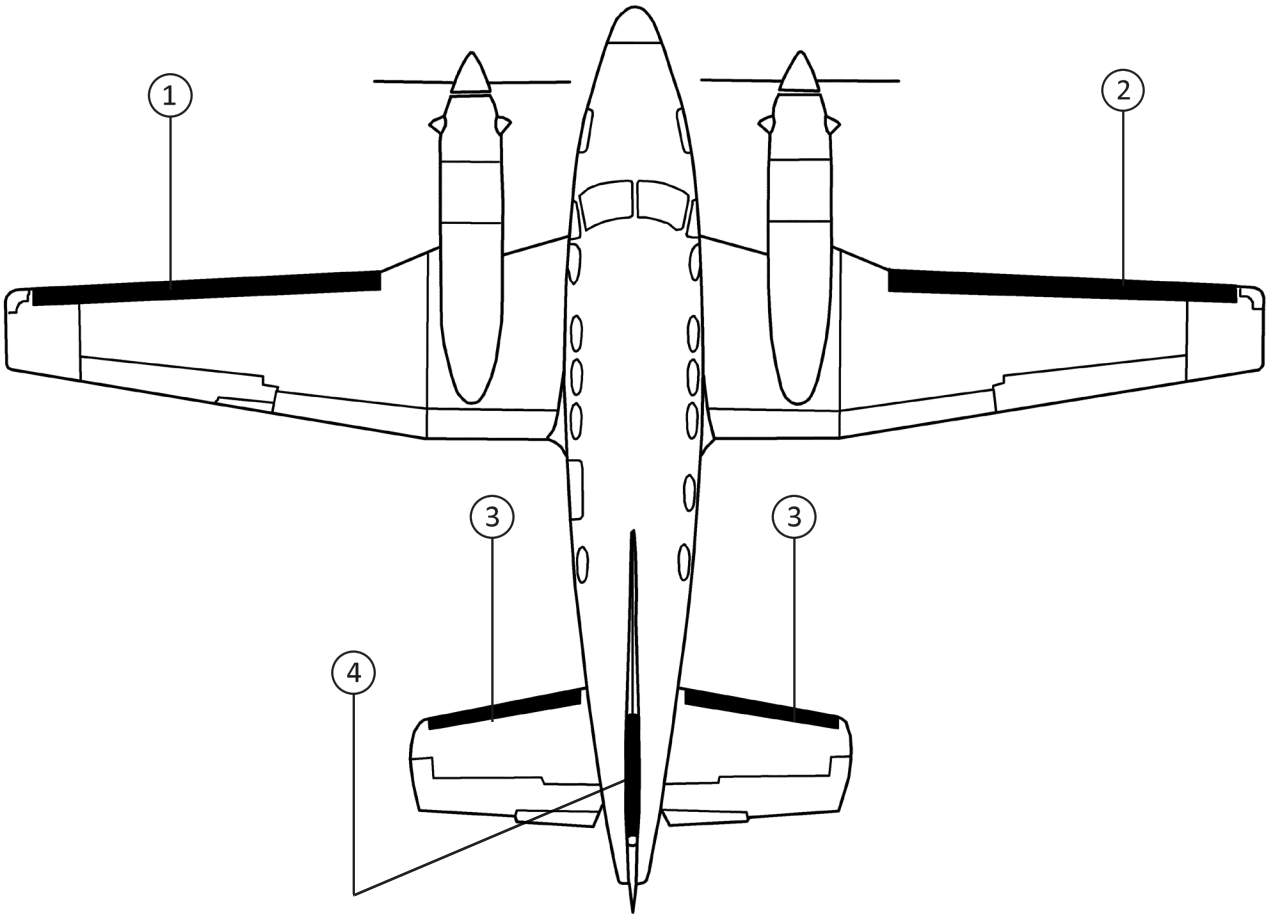

BEECHCRAFT C90GT (KING AIR)

STANDARD DE-ICE BOOTS

POSITION ID	GOODRICH PART NUMBER	AIRCRAFT OEM P/N	DESCRIPTION	QTY PER AIRCRAFT	WT
1	25S-7D5064-25		WING LH DE-ICE BOOT (REPLACES 25S-7D5064-03)	1	6.0
2	25S-7D5064-26		WING RH DE-ICE BOOT (REPLACES 25S-7D5064-04)	1	6.0
3	25S-7D5064-05		HORIZONTAL STABILIZER LH/RH DE-ICE BOOT	2	2.0
4	25S-7D5064-10		VERTICAL STABILIZER DE-ICE BOOT	1	1.5

OPTIONAL STANDARD DE-ICE BOOTS

POSITION ID	GOODRICH PART NUMBER	AIRCRAFT OEM P/N	DESCRIPTION	QTY PER AIRCRAFT	WT
3	25S-7D5064-15*		HORIZONTAL STABILIZER LH/RH (ESTANE®) DE-ICE BOOT	2	2.4

*ESTANE® DE-ICERS HAVE A SURFACE PLY RESISTANT TO DIESTER TYPE ENGINE OIL

FASTboot® DE-ICE BOOTS

POSITION ID	GOODRICH PART NUMBER	AIRCRAFT OEM P/N	DESCRIPTION	QTY PER AIRCRAFT	WT
1	P25S-7D5064-25		FASTBOOT® WING LH DE-ICE BOOT (REPLACES P25S-7D5064-03)	1	6.0
2	P25S-7D5064-26		FASTBOOT® WING RH DE-ICE BOOT (REPLACES P25S-7D5064-03)	1	6.0
3	P25S-7D5064-05		FASTBOOT® HORIZONTAL STABILIZER LH/RH DE-ICE BOOT	2	2.0
4	P25S-7D5064-10		FASTBOOT® VERTICAL STABILIZER DE-ICE BOOT	1	1.5

OPTIONAL FASTboot® DE-ICE BOOTS

POSITION ID	GOODRICH PART NUMBER	AIRCRAFT OEM P/N	DESCRIPTION	QTY PER AIRCRAFT	WT
3	P25S-7D5064-15*		FASTBOOT® HORIZONTAL STABILIZER LH/RH (ESTANE®)DE-ICE BOOT	2	2.4

BEECHCRAFT C90GT (KING AIR)

BEECHCRAFT C90GT (KING AIR)

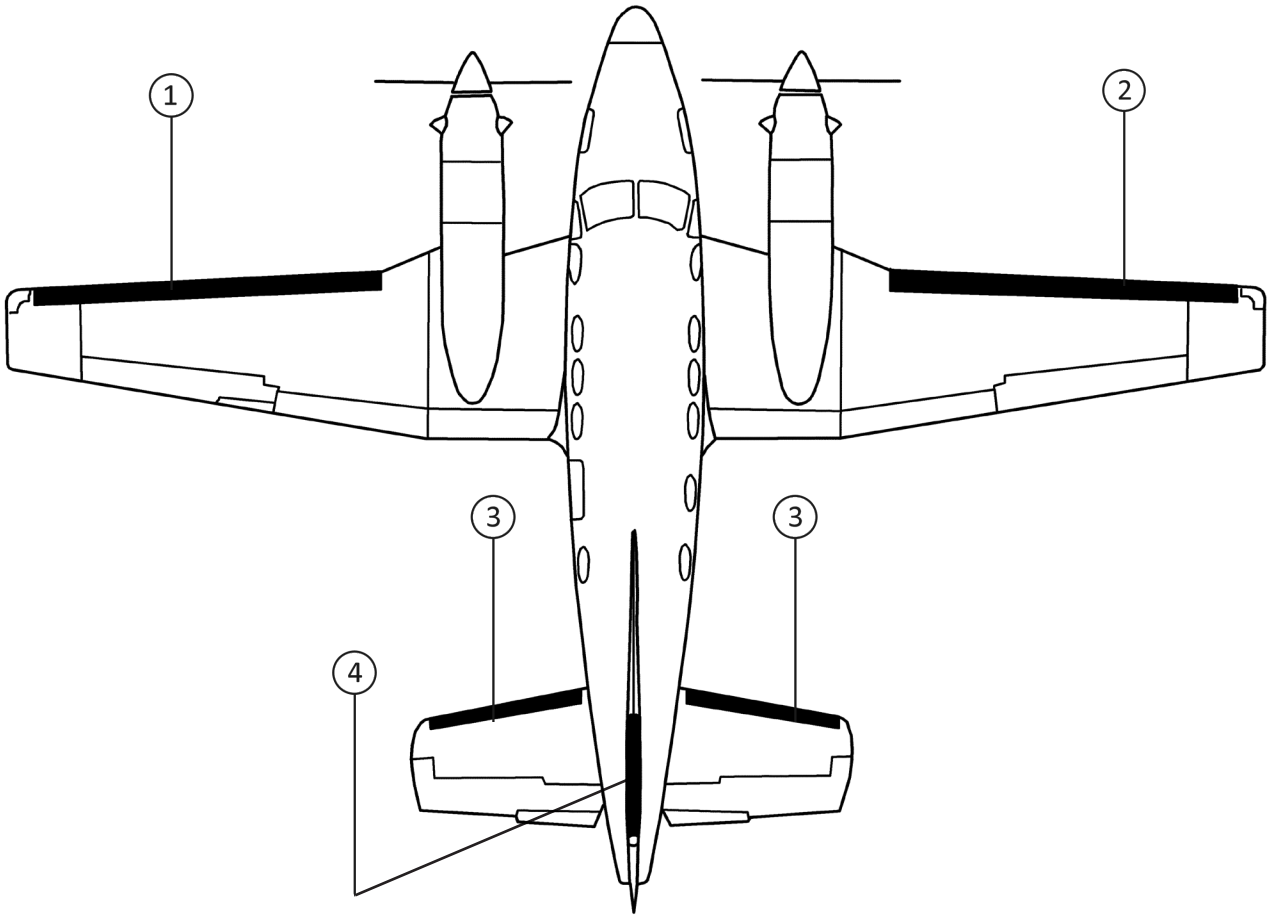

BEECHCRAFT C90GTi (KING AIR)

STANDARD DE-ICE BOOTS

POSITION ID	GOODRICH PART NUMBER	AIRCRAFT OEM P/N	DESCRIPTION	QTY PER AIRCRAFT	WT
1	25S-7D5064-25		WING LH DE-ICE BOOT (REPLACES 25S-7D5064-03)	1	6.0
2	25S-7D5064-26		WING RH DE-ICE BOOT (REPLACES 25S-7D5064-04)	1	6.0
3	25S-7D5064-05		HORIZONTAL STABILIZER LH/RH DE-ICE BOOT	2	2.0
4	25S-7D5064-10		VERTICAL STABILIZER DE-ICE BOOT	1	1.5

OPTIONAL STANDARD DE-ICE BOOTS

POSITION ID	GOODRICH PART NUMBER	AIRCRAFT OEM P/N	DESCRIPTION	QTY PER AIRCRAFT	WT
3	25S-7D5064-15*		HORIZONTAL STABILIZER LH/RH (ESTANE®) DE-ICE BOOT	2	2.4

*ESTANE® DE-ICERS HAVE A SURFACE PLY RESISTANT TO DIESTER TYPE ENGINE OIL

FASTboot® DE-ICE BOOTS

POSITION ID	GOODRICH PART NUMBER	AIRCRAFT OEM P/N	DESCRIPTION	QTY PER AIRCRAFT	WT
1	P25S-7D5064-25		FASTBOOT® WING LH DE-ICE BOOT (REPLACES P25S-7D5064-03)	1	6.0
2	P25S-7D5064-26		FASTBOOT® WING RH DE-ICE BOOT (REPLACES P25S-7D5064-03)	1	6.0
3	P25S-7D5064-05		FASTBOOT® HORIZONTAL STABILIZER LH/RH DE-ICE BOOT	2	2.0
4	P25S-7D5064-10		FASTBOOT® VERTICAL STABILIZER DE-ICE BOOT	1	1.5

OPTIONAL FASTboot® DE-ICE BOOTS

POSITION ID	GOODRICH PART NUMBER	AIRCRAFT OEM P/N	DESCRIPTION	QTY PER AIRCRAFT	WT
3	P25S-7D5064-15*		FASTBOOT® HORIZONTAL STABILIZER LH/RH (ESTANE®)DE-ICE BOOT	2	2.4

BEECHCRAFT C90GTi (KING AIR)

BEECHCRAFT C90GTi (KING AIR)

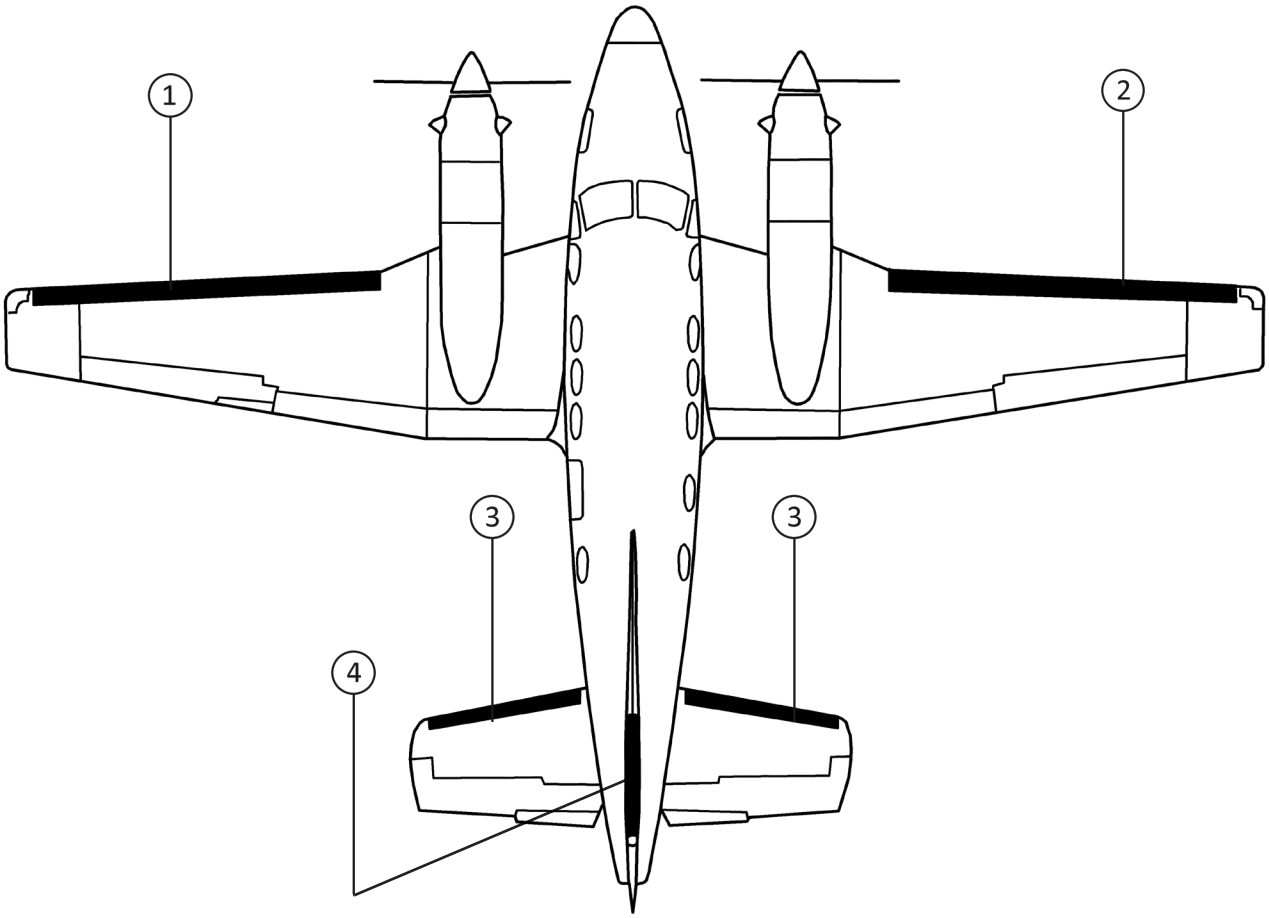

BEECHCRAFT C90GTx (KING AIR)

STANDARD DE-ICE BOOTS

POSITION ID	GOODRICH PART NUMBER	AIRCRAFT OEM P/N	DESCRIPTION	QTY PER AIRCRAFT	WT
1	25S-7D5064-25		WING LH DE-ICE BOOT (REPLACES 25S-7D5064-03)	1	6.0
2	25S-7D5064-26		WING RH DE-ICE BOOT (REPLACES 25S-7D5064-04)	1	6.0
3	25S-7D5064-05		HORIZONTAL STABILIZER LH/RH DE-ICE BOOT	2	2.0
4	25S-7D5064-10		VERTICAL STABILIZER DE-ICE BOOT	1	1.5

OPTIONAL STANDARD DE-ICE BOOTS

POSITION ID	GOODRICH PART NUMBER	AIRCRAFT OEM P/N	DESCRIPTION	QTY PER AIRCRAFT	WT
3	25S-7D5064-15*		HORIZONTAL STABILIZER LH/RH (ESTANE®) DE-ICE BOOT	2	2.4

*ESTANE® DE-ICERS HAVE A SURFACE PLY RESISTANT TO DIESTER TYPE ENGINE OIL

FASTboot® DE-ICE BOOTS

POSITION ID	GOODRICH PART NUMBER	AIRCRAFT OEM P/N	DESCRIPTION	QTY PER AIRCRAFT	WT
1	P25S-7D5064-25		FASTBOOT® WING LH DE-ICE BOOT (REPLACES P25S-7D5064-03)	1	6.0
2	P25S-7D5064-26		FASTBOOT® WING RH DE-ICE BOOT (REPLACES P25S-7D5064-03)	1	6.0
3	P25S-7D5064-05		FASTBOOT® HORIZONTAL STABILIZER LH/RH DE-ICE BOOT	2	2.0
4	P25S-7D5064-10		FASTBOOT® VERTICAL STABILIZER DE-ICE BOOT	1	1.5

OPTIONAL FASTboot® DE-ICE BOOTS

POSITION ID	GOODRICH PART NUMBER	AIRCRAFT OEM P/N	DESCRIPTION	QTY PER AIRCRAFT	WT
3	P25S-7D5064-15*		FASTBOOT® HORIZONTAL STABILIZER LH/RH (ESTANE®)DE-ICE BOOT	2	2.4

BEECHCRAFT C90GTx (KING AIR)

BEECHCRAFT C90GTx (KING AIR)

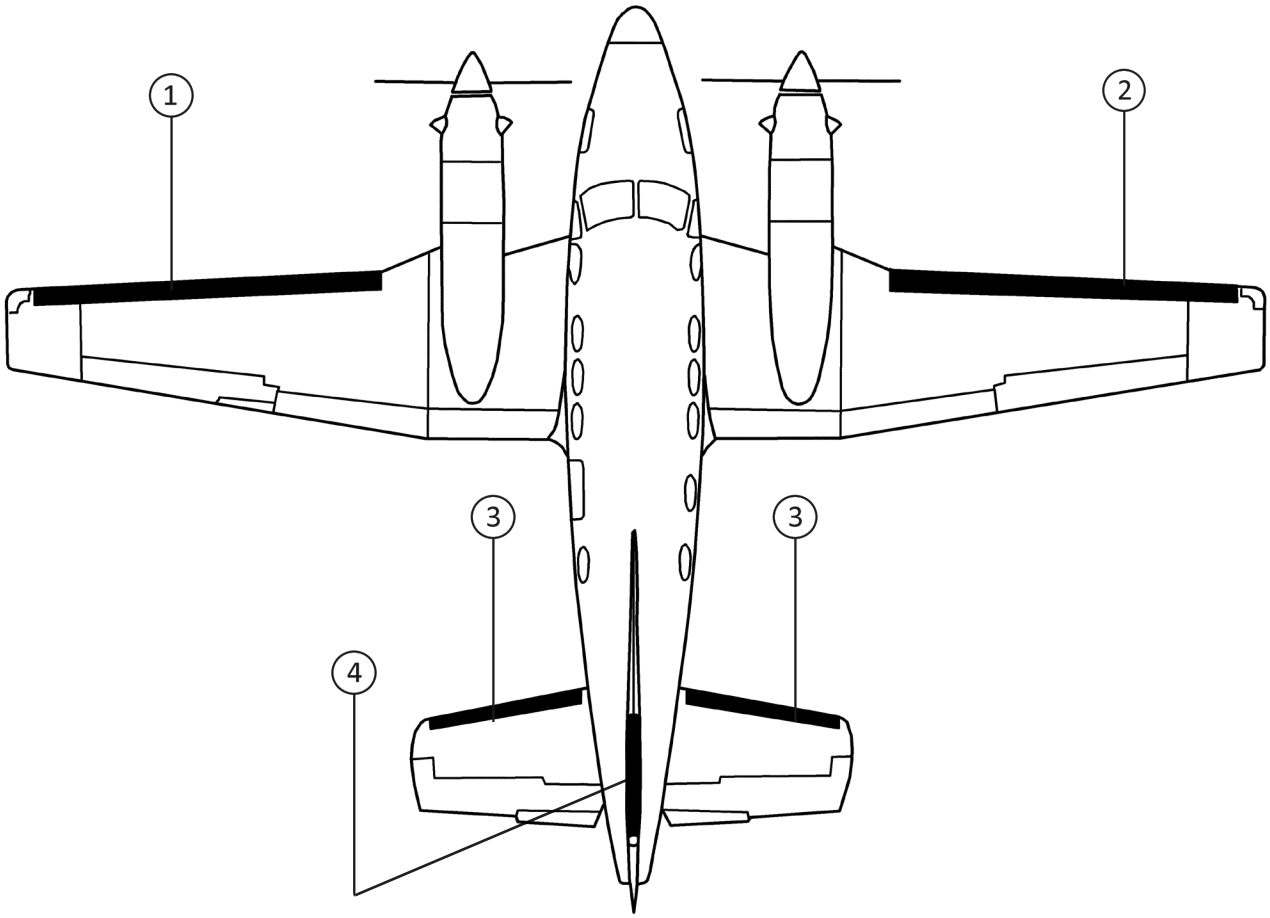

BEECHCRAFT C90-1 (KING AIR) S/N LJ-986 THRU LJ-1062

BEECHCRAFT C90-1 (KING AIR) S/N LJ-986 THRU LJ-1062

STANDARD DE-ICE BOOTS

POSITION ID	GOODRICH PART NUMBER	AIRCRAFT OEM P/N	DESCRIPTION	QTY PER AIRCRAFT	WT
1	25S-7D5064-25		WING LH DE-ICE BOOT (REPLACES 25S-7D5064-03)	1	6.0
2	25S-7D5064-26		WING RH DE-ICE BOOT (REPLACES 25S-7D5064-04)	1	6.0
3	25S-7D5064-05		HORIZONTAL STABILIZER LH/RH DE-ICE BOOT	2	2.0
4	25S-7D5064-10		VERTICAL STABILIZER DE-ICE BOOT	1	1.5

FASTboot® DE-ICE BOOTS

POSITION ID	GOODRICH PART NUMBER	AIRCRAFT OEM P/N	DESCRIPTION	QTY PER AIRCRAFT	WT
1	P25S-7D5064-25		FASTBOOT® WING LH DE-ICE BOOT (REPLACES P25S-7D5064-03)	1	6.0
2	P25S-7D5064-26		FASTBOOT® WING RH DE-ICE BOOT (REPLACES P25S-7D5064-03)	1	6.0
3	P25S-7D5064-05		FASTBOOT® HORIZONTAL STABILIZER LH/RH DE-ICE BOOT	2	2.0
4	P25S-7D5064-10		FASTBOOT® VERTICAL STABILIZER DE-ICE BOOT	1	1.5

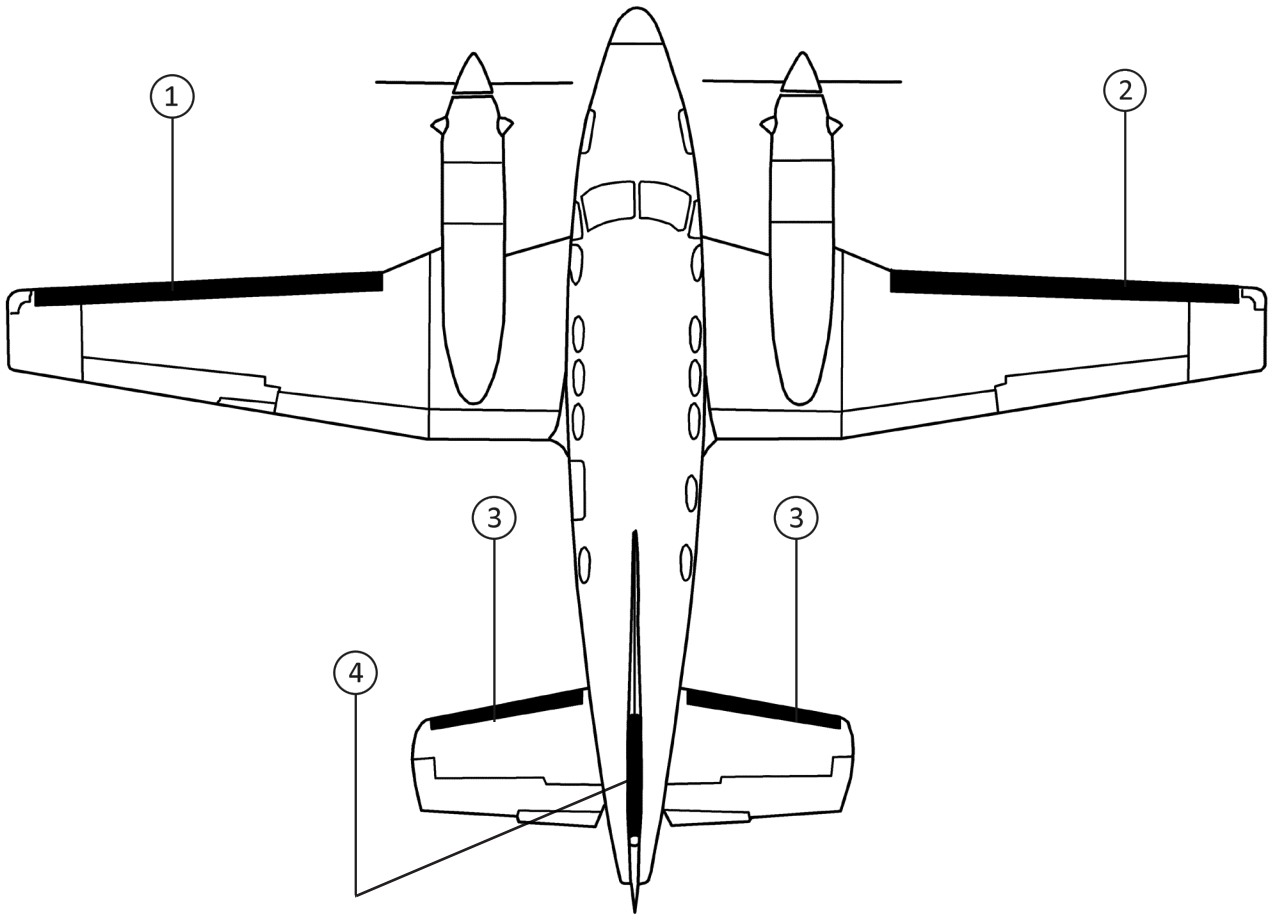

BEECHCRAFT E90 (KING AIR) S/N LW-1 THRU LW-119

STANDARD DE-ICE BOOTS

POSITION ID	GOODRICH PART NUMBER	AIRCRAFT OEM P/N	DESCRIPTION	QTY PER AIRCRAFT	WT
1	23S-2014-21-1	50-380139-17	BREAK-TIP LH DE-ICE BOOT	1	7.0
2	23S-2014-21-2	50-380139-18	BREAK-TIP RH DE-ICE BOOT	1	7.0
3	23S-2014-15-1	50-380139-13	LIGHT-TIP LH DE-ICE BOOT	1	1.0
4	23S-2014-15-2	50-380139-14	LIGHT-TIP RH DE-ICE BOOT	1	1.0
5	23S-2014-9-1	50-380139-4	HORIZONTAL STABILIZER LH/RH DE-ICE BOOT	2	2.9
6	23S-2014-10-1	50-380139-3	VERTICAL STABILIZER DE-ICE BOOT	1	2.1
		130421-00900*	STALL STRIP (QTY 1 REQ RH WING)		

*ORDERED THROUGH OEM

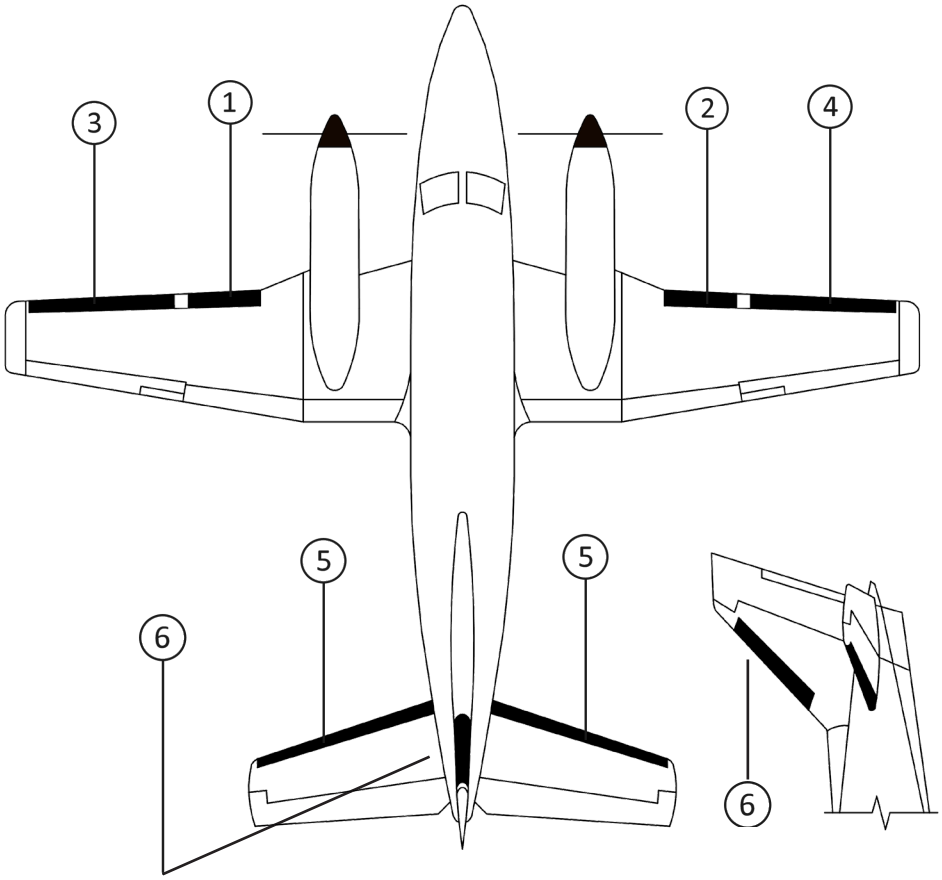

BEECHCRAFT E90 (KING AIR) S/N LW-120 UP

STANDARD DE-ICE BOOTS

POSITION ID	GOODRICH PART NUMBER	AIRCRAFT OEM P/N	DESCRIPTION	QTY PER AIRCRAFT	WT
1	25S-7D5064-03		WING LH DE-ICE BOOT	1	6.0
2	25S-7D5064-04		WING RH DE-ICE BOOT	1	6.0
3	25S-7D5064-05		HORIZONTAL STABILIZER LH/RH DE-ICE BOOT	2	2.0
4	25S-7D5064-10		VERTICAL STABILIZER DE-ICE BOOT	1	1.4
5	5E1319		ENGINE INLET ANTI-ICER	2	

FASTboot® DE-ICE BOOTS

POSITION ID	GOODRICH PART NUMBER	AIRCRAFT OEM P/N	DESCRIPTION	QTY PER AIRCRAFT	WT
1	P25S-7D5064-03		FASTBOOT® WING LH DE-ICE BOOT	1	6.0
2	P25S-7D5064-04		FASTBOOT® WING RH DE-ICE BOOT	1	6.0
3	P25S-7D5064-05		FASTBOOT® HORIZONTAL STABILIZER LH/RH DE-ICE BOOT	2	2.0
4	P25S-7D5064-10		FASTBOOT® VERTICAL STABILIZER DE-ICE BOOT	1	1.4

BEECHCRAFT E90 (KING AIR) S/N LW-120 UP

BEECHCRAFT E90 (KING AIR) S/N LW-120 UP

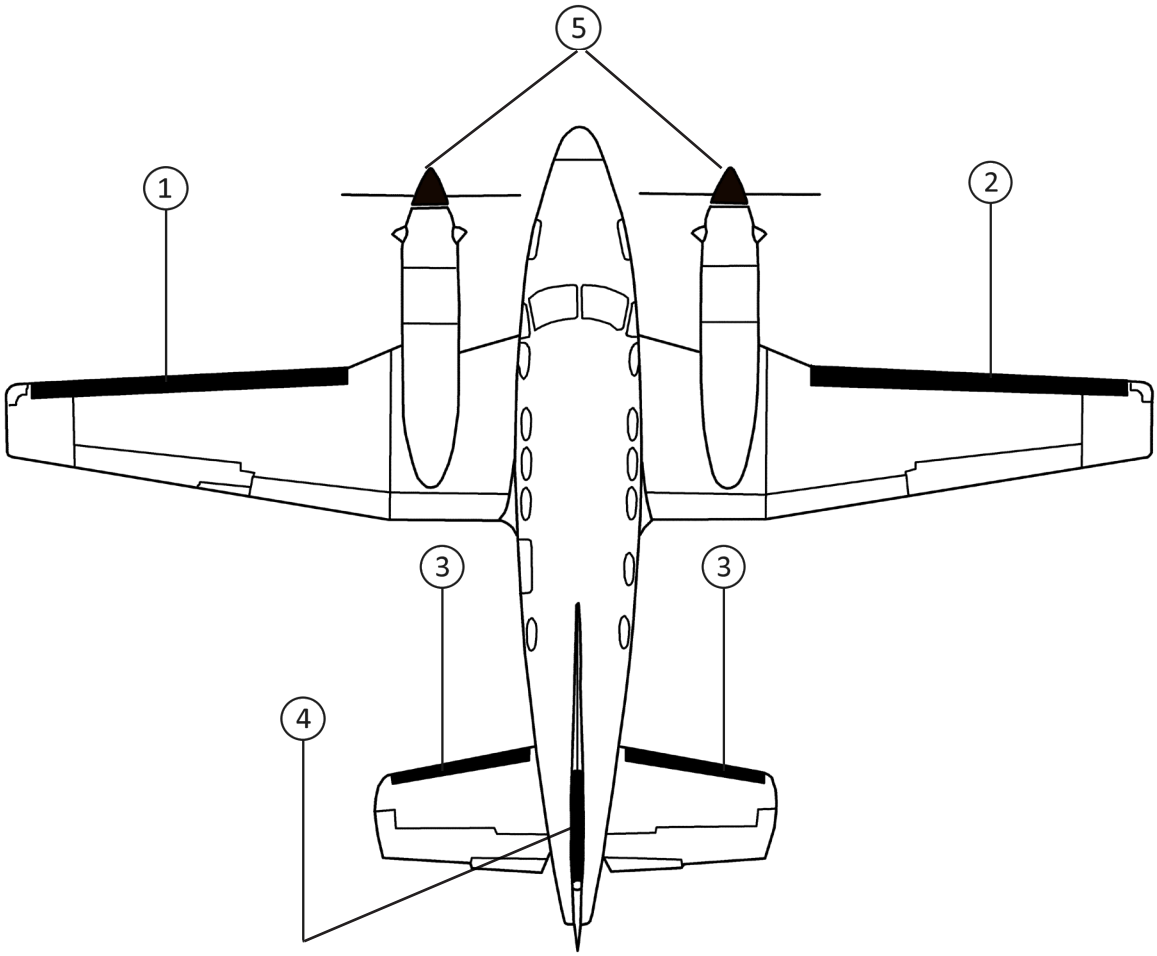

BEECHCRAFT F90 (KING AIR)

STANDARD DE-ICE BOOTS

POSITION ID	GOODRICH PART NUMBER	AIRCRAFT OEM P/N	DESCRIPTION	QTY PER AIRCRAFT	WT
1	25S-7D5064-01		WING LH DE-ICE BOOT	1	5.1
2	25S-7D5064-02		WING RH DE-ICE BOOT	1	5.1
3	25S-7D5064-17	101-380001-9	HORIZONTAL STABILIZER LH DE-ICE BOOT	1	3.6
4	25S-7D5064-18	101-380001-10	HORIZONTAL STABILIZER RH DE-ICE BOOT	1	3.6

FASTboot® DE-ICE BOOTS

POSITION ID	GOODRICH PART NUMBER	AIRCRAFT OEM P/N	DESCRIPTION	QTY PER AIRCRAFT	WT
1	P25S-7D5064-01		FASTBOOT® WING LH DE-ICE BOOT	1	5.1
2	P25S-7D5064-02		FASTBOOT® WING RH DE-ICE BOOT	1	5.1
3	P25S-7D5064-17		FASTBOOT® HORIZONTAL STABILIZER LH DE-ICE BOOT	1	3.6
4	P25S-7D5064-18		FASTBOOT® HORIZONTAL STABILIZER RH DE-ICE BOOT	1	3.6

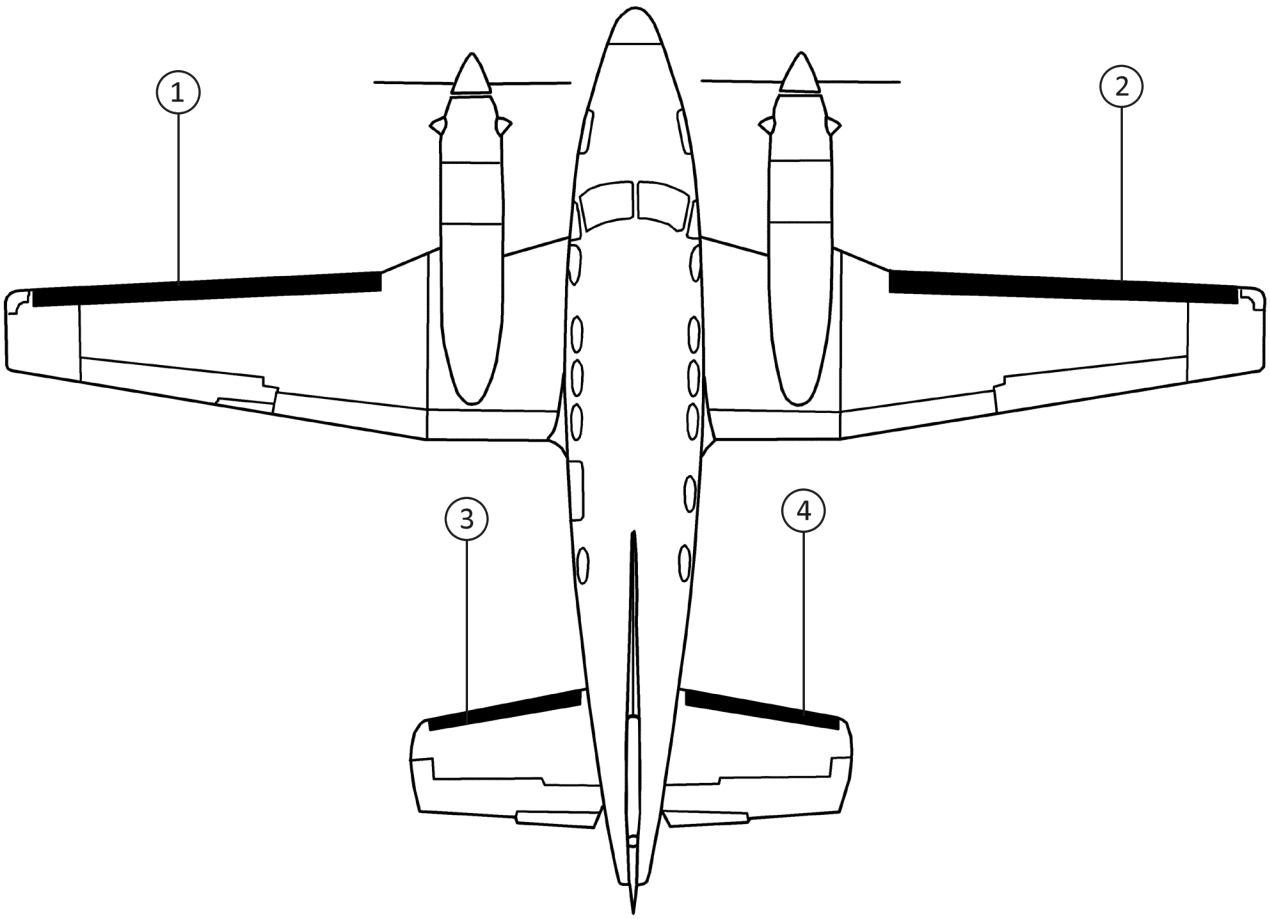

BEECHCRAFT F90-1 (KING AIR)

STANDARD DE-ICE BOOTS

POSITION ID	GOODRICH PART NUMBER	AIRCRAFT OEM P/N	DESCRIPTION	QTY PER AIRCRAFT	WT
1	25S-7D5064-01		WING LH DE-ICE BOOT	1	5.1
2	25S-7D5064-02		WING RH DE-ICE BOOT	1	5.1
3	25S-7D5064-17	101-380001-9	HORIZONTAL STABILIZER LH DE-ICE BOOT	1	3.6
4	25S-7D5064-18	101-380001-10	HORIZONTAL STABILIZER RH DE-ICE BOOT	1	3.6

FASTboot® DE-ICE BOOTS

POSITION ID	GOODRICH PART NUMBER	AIRCRAFT OEM P/N	DESCRIPTION	QTY PER AIRCRAFT	WT
1	P25S-7D5064-01		FASTBOOT® WING LH DE-ICE BOOT	1	5.1
2	P25S-7D5064-02		FASTBOOT® WING RH DE-ICE BOOT	1	5.1
3	P25S-7D5064-17		FASTBOOT® HORIZONTAL STABILIZER LH DE-ICE BOOT	1	3.6
4	P25S-7D5064-18		FASTBOOT® HORIZONTAL STABILIZER RH DE-ICE BOOT	1	3.6

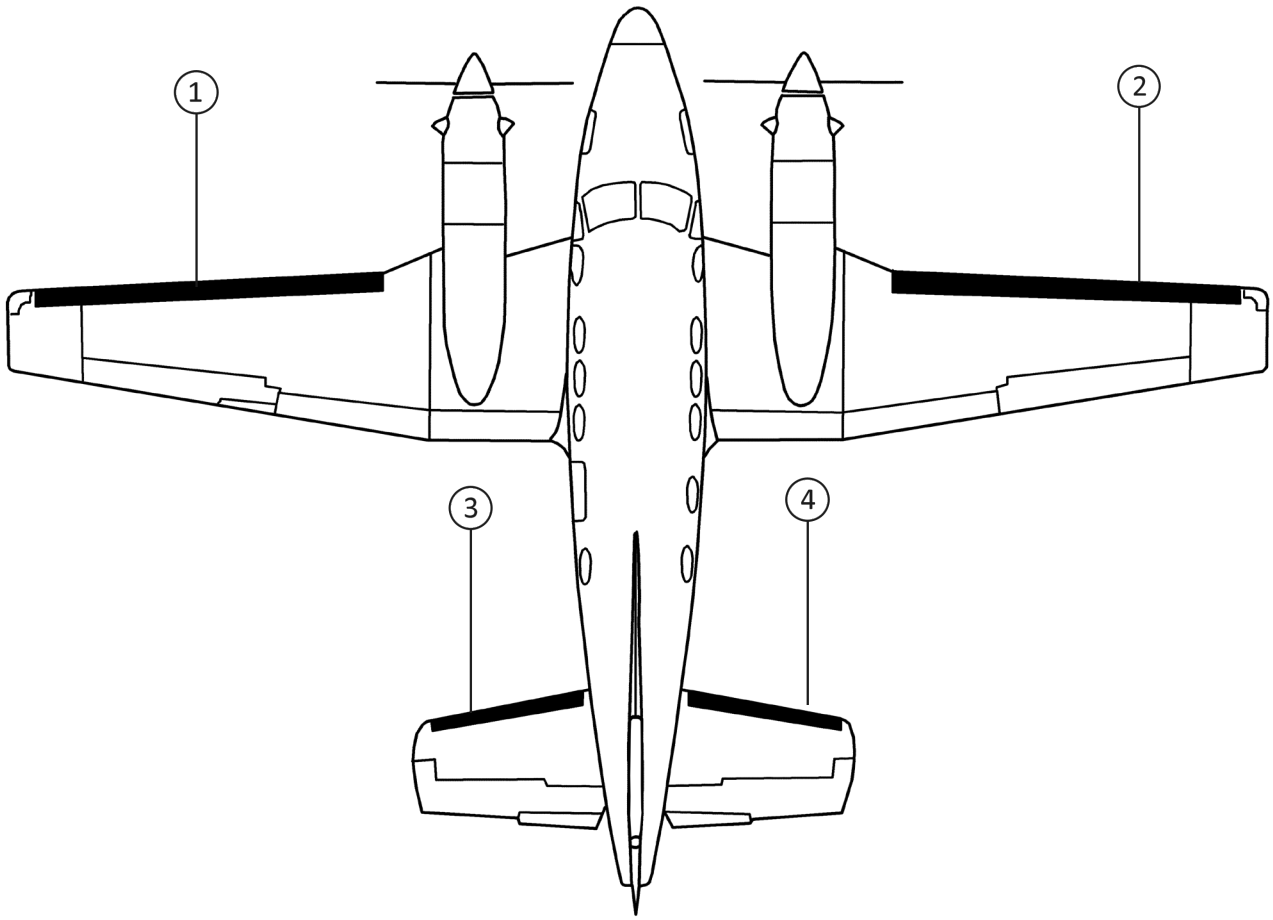

BEECHCRAFT H90 (T-44A) (KING AIR/PEGASUS)

STANDARD DE-ICE BOOTS

POSITION ID	GOODRICH PART NUMBER	AIRCRAFT OEM P/N	DESCRIPTION	QTY PER AIRCRAFT	WT
1	25S-7D5064-03		WING LH DE-ICE BOOT	1	6.0
2	25S-7D5064-04		WING RH DE-ICE BOOT	1	6.0
3	25S-7D5064-05		HORIZONTAL STABILIZER LH/RH DE-ICE BOOT	2	2.0
4	25S-7D5064-10		VERTICAL STABILIZER DE-ICE BOOT	1	1.4

OPTIONAL STANDARD DE-ICE BOOTS

POSITION ID	GOODRICH PART NUMBER	AIRCRAFT OEM P/N	DESCRIPTION	QTY PER AIRCRAFT	WT
3	25S-7D5064-15*		HORIZONTAL STABILIZER LH/RH (ESTANE®) DE-ICE BOOT	2	2.4

*ESTANE® DE-ICERS HAVE A SURFACE PLY RESISTANT TO DIESTER TYPE ENGINE OIL

FASTboot® DE-ICE BOOTS

POSITION ID	GOODRICH PART NUMBER	AIRCRAFT OEM P/N	DESCRIPTION	QTY PER AIRCRAFT	WT
1	P25S-7D5064-03		FASTBOOT® WING LH DE-ICE BOOT	1	6.0
2	P25S-7D5064-04		FASTBOOT® WING RH DE-ICE BOOT	1	6.0
3	P25S-7D5064-05		FASTBOOT® HORIZONTAL STABILIZER LH/RH DE-ICE BOOT	2	2.0
4	P25S-7D5064-10		FASTBOOT® VERTICAL STABILIZER DE-ICE BOOT	1	1.4

OPTIONAL FASTboot® DE-ICE BOOTS

POSITION ID	GOODRICH PART NUMBER	AIRCRAFT OEM P/N	DESCRIPTION	QTY PER AIRCRAFT	WT
3	P25S-7D5064-15*		FASTBOOT® HORIZONTAL STABILIZER LH/RH (ESTANE®) DE-ICE BOOT	2	2.4

BEECHCRAFT H90 (T-44A) (KING AIR/PEGASUS)

BEECHCRAFT H90 (T-44A) (KING AIR/PEGASUS)

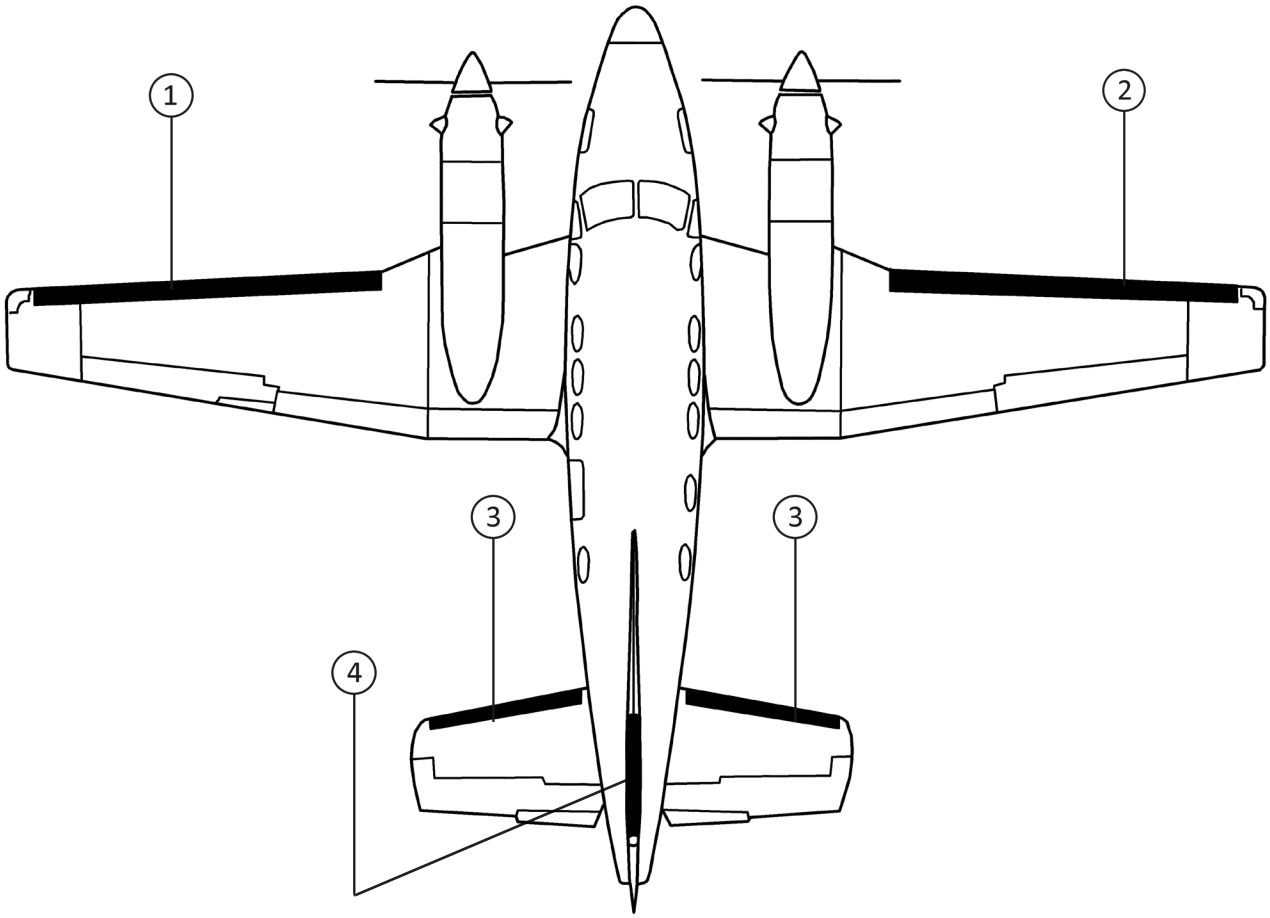

BEECHCRAFT 95 (TRAVEL AIR)

STANDARD DE-ICE BOOTS

POSITION ID	GOODRICH PART NUMBER	AIRCRAFT OEM P/N	DESCRIPTION	QTY PER AIRCRAFT	WT
1	23S-2004-1-1		NACELLE-LIGHT LH DE-ICE BOOT	1	2.1
2	23S-2004-1-2		NACELLE-LIGHT RH DE-ICE BOOT	1	2.1
3	23S-2004-2-1		LIGHT-TIP LH DE-ICE BOOT	1	3.6
4	23S-2004-2-2		LIGHT-TIP RH DE-ICE BOOT	1	3.8
5	23S-2004-3-1		HORIZONTAL STABILIZER LH DE-ICE BOOT	1	2.4
6	23S-2004-3-2		HORIZONTAL STABILIZER RH DE-ICE BOOT	1	2.4
7	23S-2004-4-1		VERTICAL STABILIZER DE-ICE BOOT	1	1.7

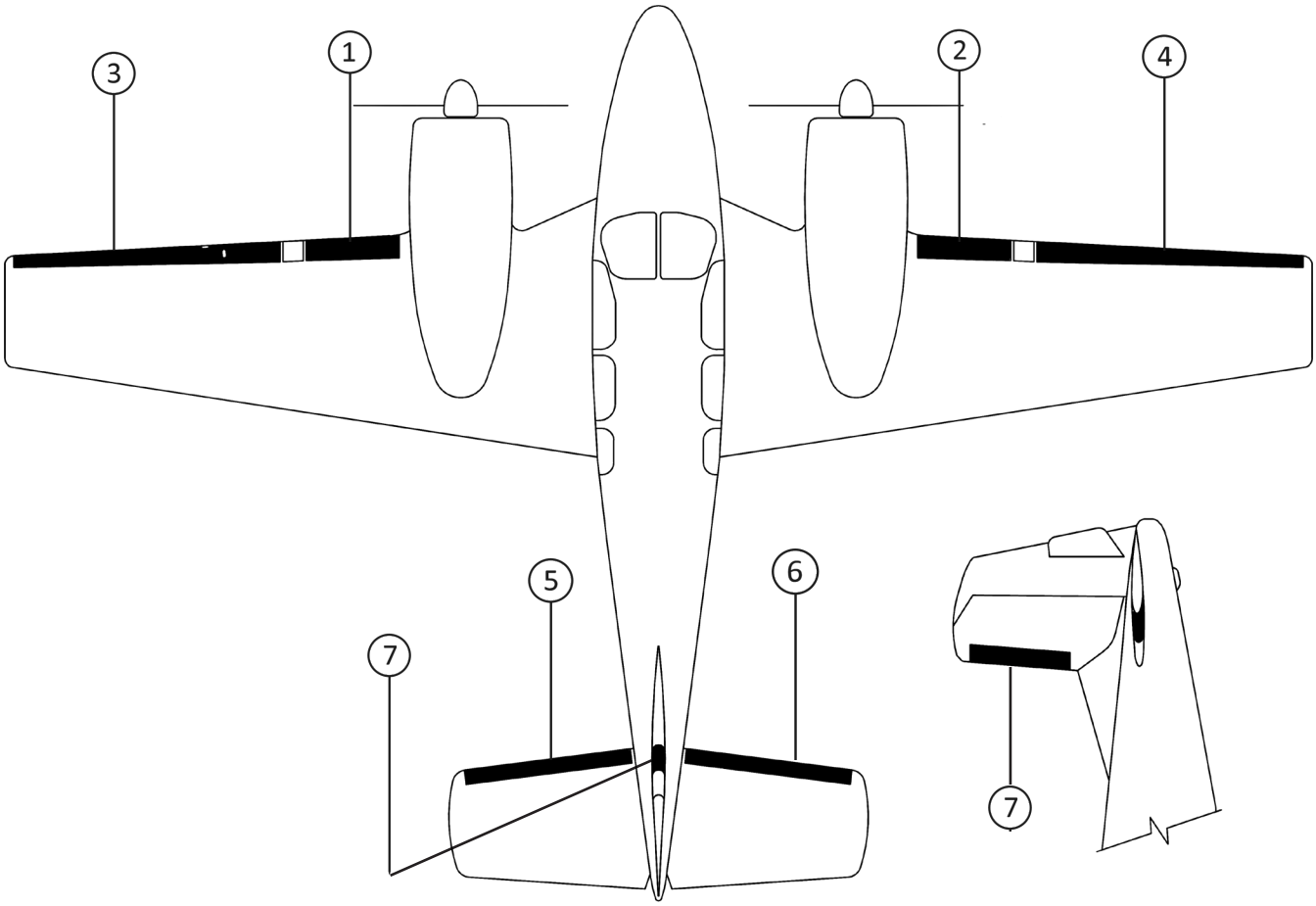

BEECHCRAFT B95 (TRAVEL AIR)

STANDARD DE-ICE BOOTS

POSITION ID	GOODRICH PART NUMBER	AIRCRAFT OEM P/N	DESCRIPTION	QTY PER AIRCRAFT	WT
1	23S-2004-1-1		NACELLE-LIGHT LH DE-ICE BOOT	1	2.1
2	23S-2004-1-2		NACELLE-LIGHT RH DE-ICE BOOT	1	2.1
3	23S-2004-2-1		LIGHT-TIP LH DE-ICE BOOT	1	3.6
4	23S-2004-2-2		LIGHT-TIP RH DE-ICE BOOT	1	3.8
5	23S-2004-5-1	23S-2004-3-1	HORIZONTAL STABILIZER LH DE-ICE BOOT	1	2.8
6	23S-2004-5-2	23S-2004-3-2	HORIZONTAL STABILIZER RH DE-ICE BOOT	1	2.8
7	23S-2004-6-1	23S-2004-4-1	VERTICAL STABILIZER DE-ICE BOOT	1	1.3

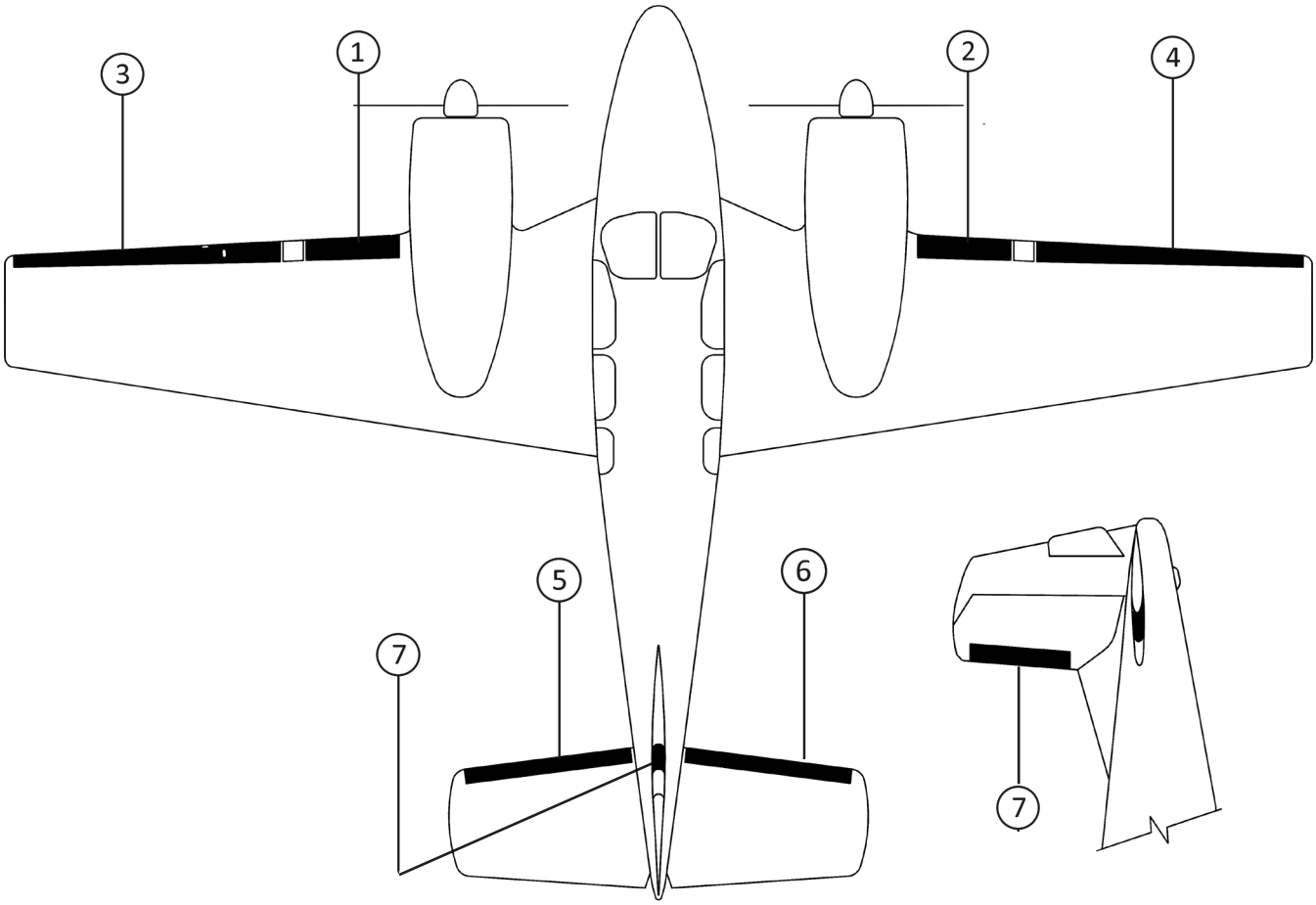

BEECHCRAFT B95A (TRAVEL AIR)

STANDARD DE-ICE BOOTS

POSITION ID	GOODRICH PART NUMBER	AIRCRAFT OEM P/N	DESCRIPTION	QTY PER AIRCRAFT	WT
1	23S-2004-10-1		NACELLE-TIP LH DE-ICE BOOT WITHOUT OPTIONAL FUEL TANK	1	6.6
2	23S-2004-10-2		NACELLE-TIP RH DE-ICE BOOT WITHOUT OPTIONAL FUEL TANK	1	6.6
3	23S-2004-5-1		HORIZONTAL STABILIZER LH DE-ICE BOOT	1	2.8
4	23S-2004-5-2		HORIZONTAL STABILIZER RH DE-ICE BOOT	1	2.8
5	23S-2004-6-1		VERTICAL STABILIZER DE-ICE BOOT	1	1.3

OPTIONAL STANDARD DE-ICE BOOTS

POSITION ID	GOODRICH PART NUMBER	AIRCRAFT OEM P/N	DESCRIPTION	QTY PER AIRCRAFT	WT
1	23S-2004-8-1		NACELLE-TIP LH DE-ICE BOOT WITH OPTIONAL FUEL TANK	1	6.7
2	23S-2004-8-2		NACELLE-TIP RH DE-ICE BOOT WITH OPTIONAL FUEL TANK	1	6.9

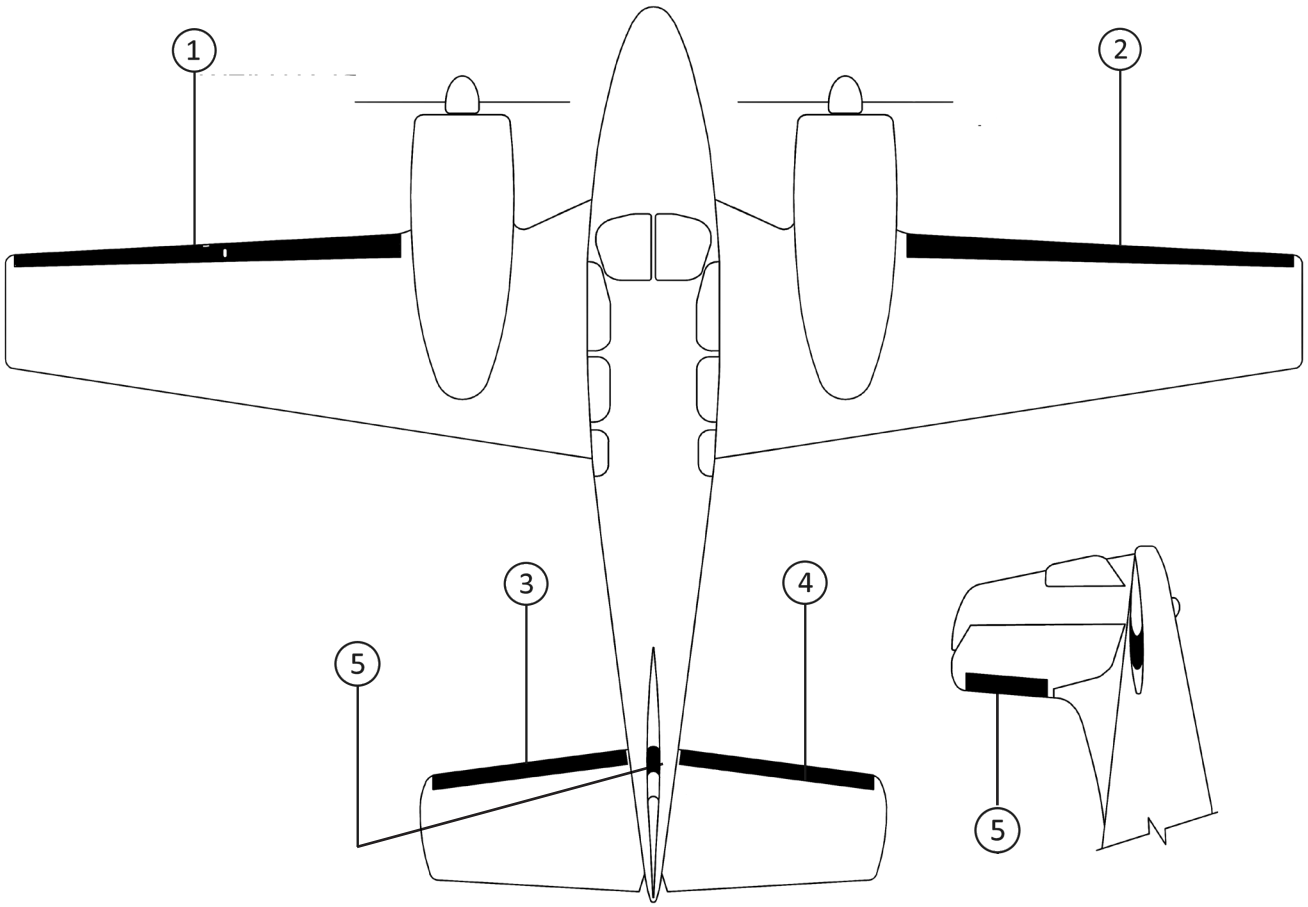

BEECHCRAFT D95A (TRAVEL AIR)

STANDARD DE-ICE BOOTS

POSITION ID	GOODRICH PART NUMBER	AIRCRAFT OEM P/N	DESCRIPTION	QTY PER AIRCRAFT	WT
1	23S-2004-10-2		NACELLE-TIP LH DE-ICE BOOT	1	6.6
2	23S-2004-13-1		NACELLE-TIP RH DE-ICE BOOT	1	6.4
3	23S-2004-5-1		HORIZONTAL STABILIZER LH DE-ICE BOOT	1	2.8
4	23S-2004-5-2		HORIZONTAL STABILIZER RH DE-ICE BOOT	1	2.8
5	23S-2004-6-1		VERTICAL STABILIZER DE-ICE BOOT	1	1.3

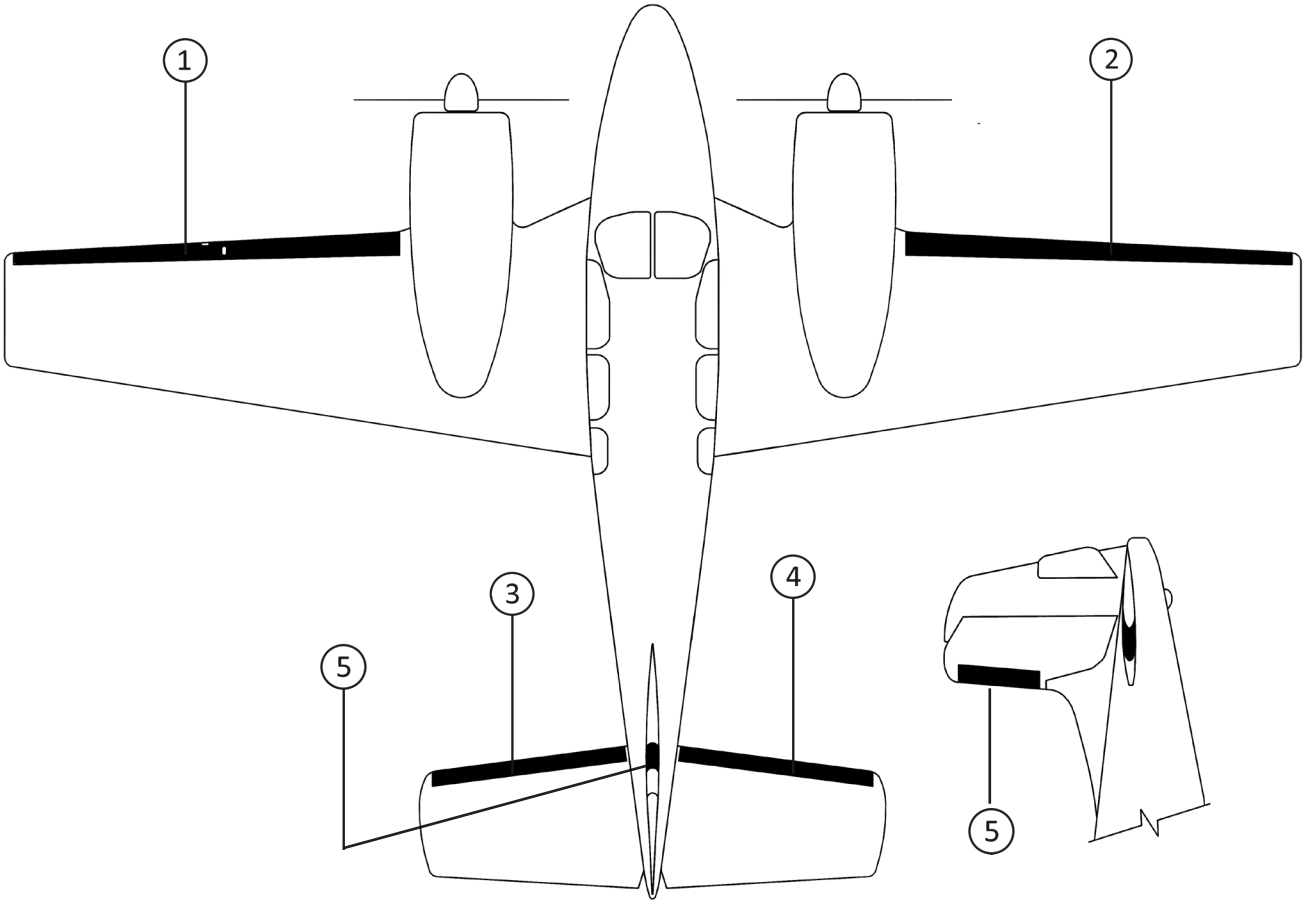

BEECHCRAFT E95 (TRAVEL AIR)

STANDARD DE-ICE BOOTS

POSITION ID	GOODRICH PART NUMBER	AIRCRAFT OEM P/N	DESCRIPTION	QTY PER AIRCRAFT	WT
1	23S-2004-10-2		NACELLE-TIP LH DE-ICE BOOT	1	6.6
2	23S-2004-13-1		NACELLE-TIP RH DE-ICE BOOT	1	6.4
3	23S-2004-5-1		HORIZONTAL STABILIZER LH DE-ICE BOOT	1	2.8
4	23S-2004-5-2		HORIZONTAL STABILIZER RH DE-ICE BOOT	1	2.8
5	23S-2004-6-1		VERTICAL STABILIZER DE-ICE BOOT	1	1.3

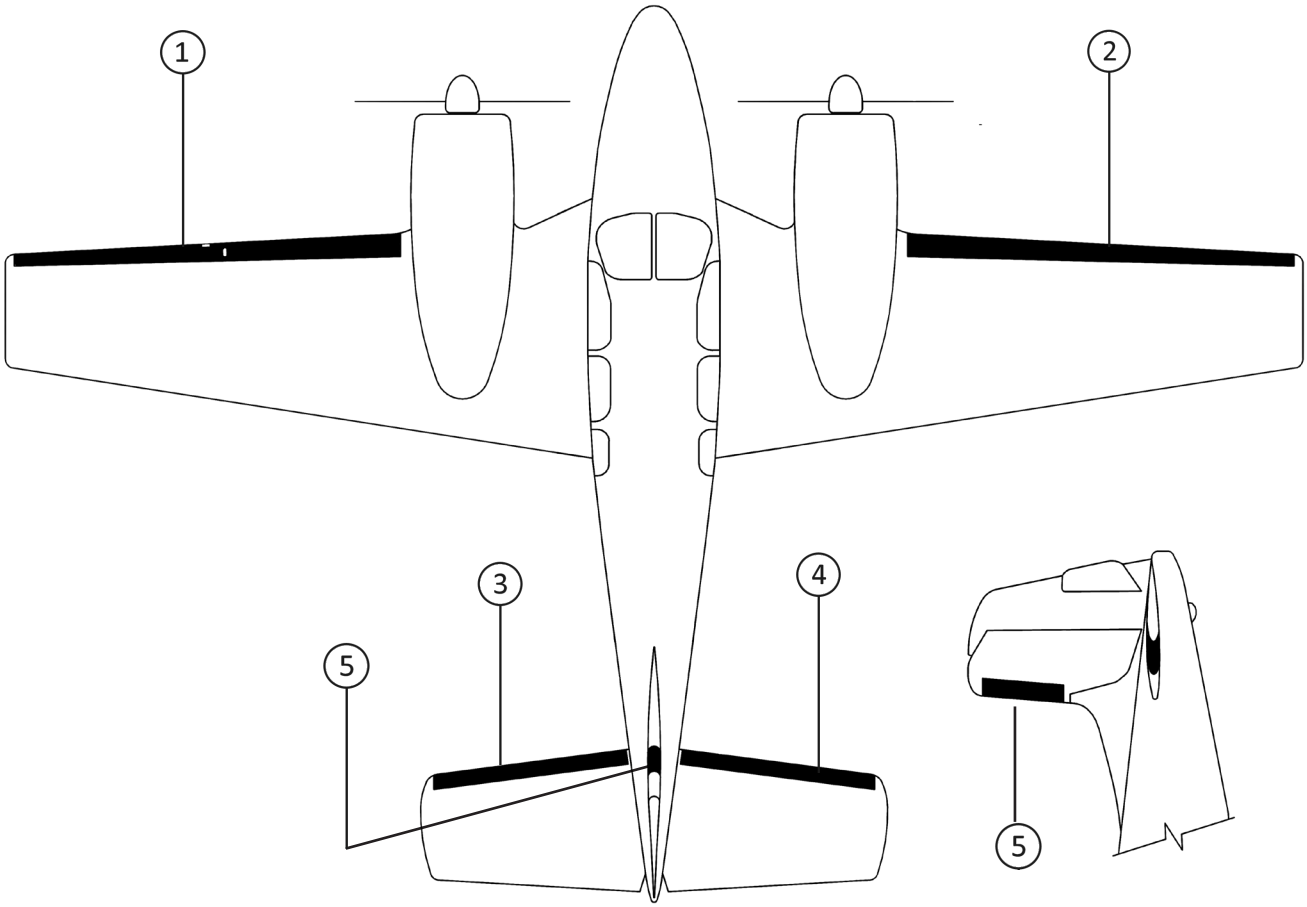

BEECHCRAFT 99 (AIRLINER)

STANDARD DE-ICE BOOTS

POSITION ID	GOODRICH PART NUMBER	AIRCRAFT OEM P/N	DESCRIPTION	QTY PER AIRCRAFT	WT
1	23S-2014-11-1	50-380139-1	BREAK-LIGHT LH DE-ICE BOOT	1	6.5
2	23S-2014-11-2	50-380139-2	BREAK-LIGHT RH DE-ICE BOOT	1	6.5
3	23S-2128-3-1	115-380114-5	HORIZONTAL STABILIZER LH/RH DE-ICE BOOT	2	5.5
4	23S-2128-4-1	115-380114-7	VERTICAL STABILIZER DE-ICE BOOT	1	3.5
5	5E1319	50-389028	ENGINE INLET ANTI-ICER	2	

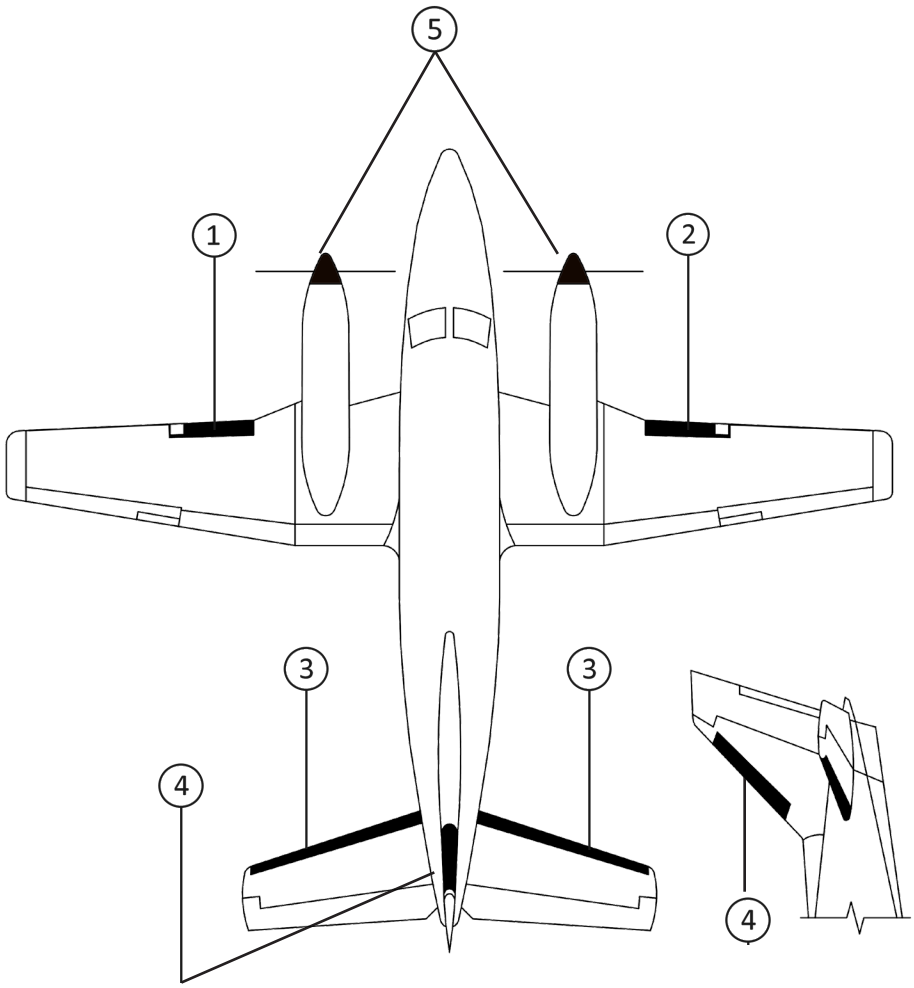

BEECHCRAFT 99A (AIRLINER)

STANDARD DE-ICE BOOTS

POSITION ID	GOODRICH PART NUMBER	AIRCRAFT OEM P/N	DESCRIPTION	QTY PER AIRCRAFT	WT
1	23S-2014-11-1	50-380139-1	BREAK-LIGHT LH DE-ICE BOOT	1	6.5
2	23S-2014-11-2	50-380139-2	BREAK-LIGHT RH DE-ICE BOOT	1	6.5
3	23S-2128-3-1	115-380114-5	HORIZONTAL STABILIZER LH/RH DE-ICE BOOT	2	5.5
4	23S-2128-4-1	115-380114-7	VERTICAL STABILIZER DE-ICE BOOT	1	3.5
5	5E1319	50-389028	ENGINE INLET ANTI-ICER	2	

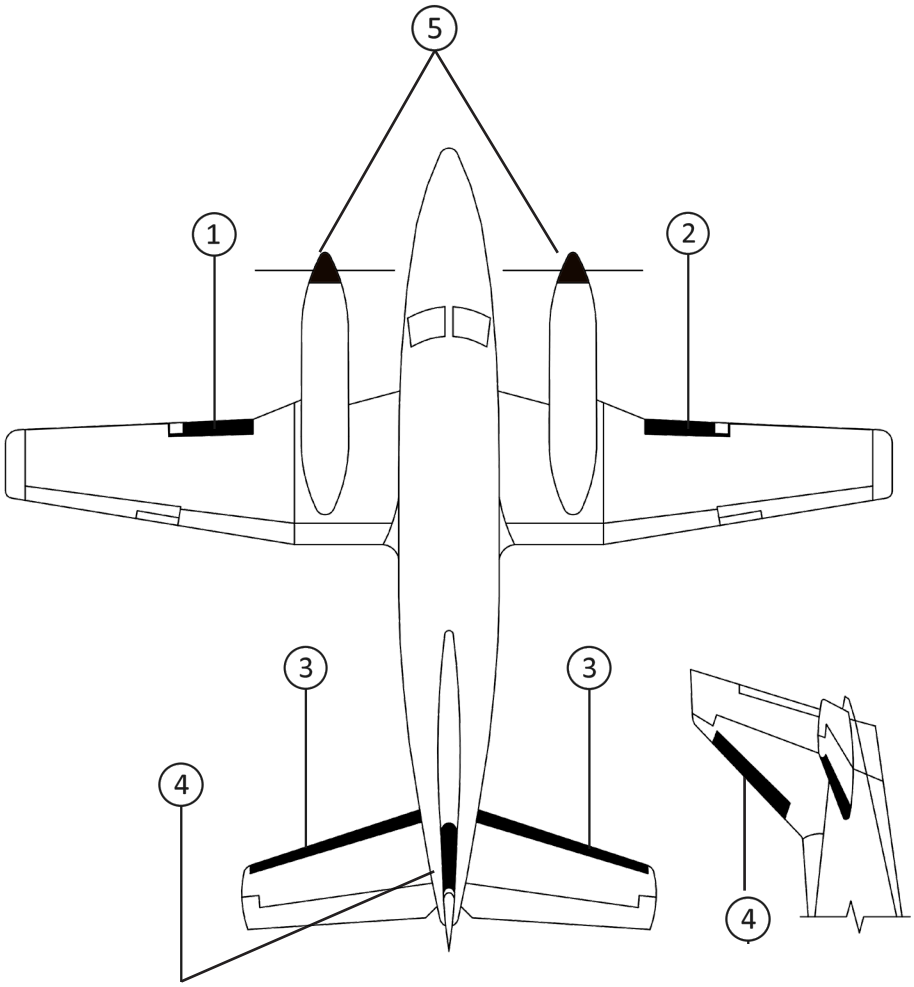

BEECHCRAFT A99 (AIRLINER)

STANDARD DE-ICE BOOTS

POSITION ID	GOODRICH PART NUMBER	AIRCRAFT OEM P/N	DESCRIPTION	QTY PER AIRCRAFT	WT
1	23S-2014-11-1	50-380139-1	BREAK-LIGHT LH DE-ICE BOOT	1	6.5
2	23S-2014-11-2	50-380139-2	BREAK-LIGHT RH DE-ICE BOOT	1	6.5
3	23S-2128-3-1	115-380114-5	HORIZONTAL STABILIZER LH/RH DE-ICE BOOT	2	5.5
4	23S-2128-4-1	115-380114-7	VERTICAL STABILIZER DE-ICE BOOT	1	3.5
5	5E1319	50-389028	ENGINE INLET ANTI-ICER	2	

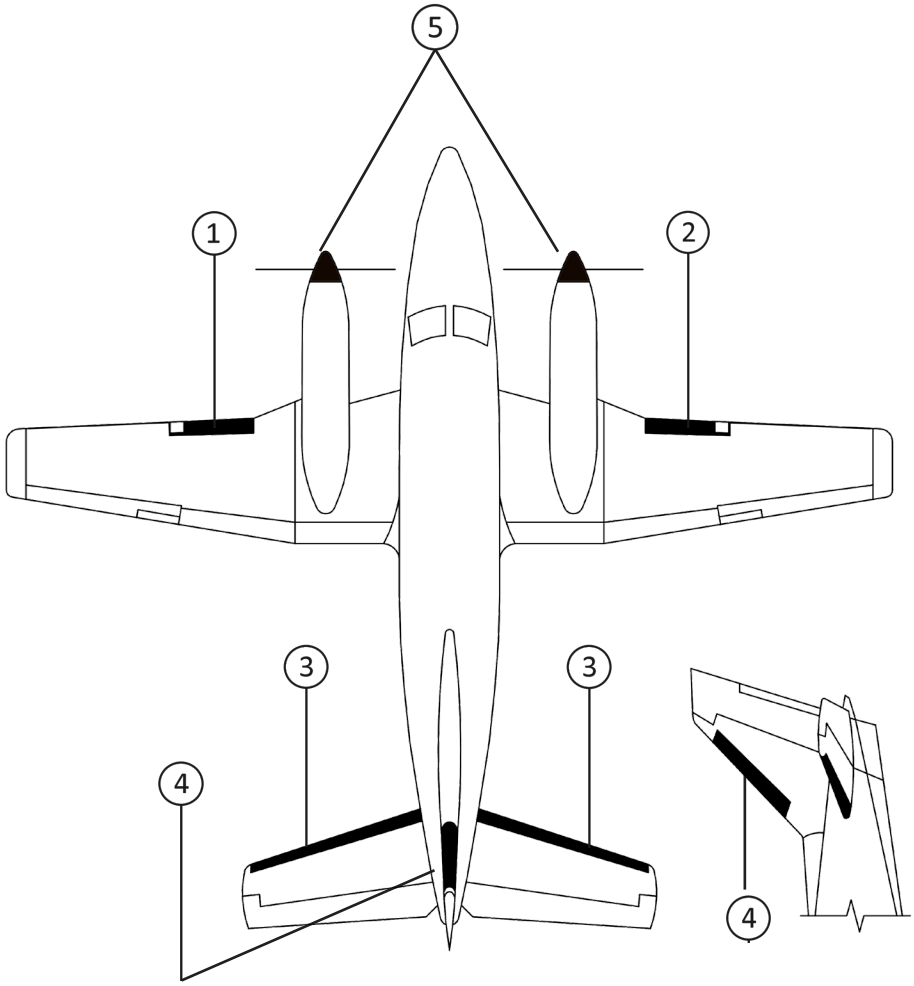

BEECHCRAFT A99A (AIRLINER)

STANDARD DE-ICE BOOTS

POSITION ID	GOODRICH PART NUMBER	AIRCRAFT OEM P/N	DESCRIPTION	QTY PER AIRCRAFT	WT
1	23S-2014-11-1	50-380139-1	BREAK-LIGHT LH DE-ICE BOOT	1	6.5
2	23S-2014-11-2	50-380139-2	BREAK-LIGHT RH DE-ICE BOOT	1	6.5
3	23S-2128-3-1	115-380114-5	HORIZONTAL STABILIZER LH/RH DE-ICE BOOT	2	5.5
4	23S-2128-4-1	115-380114-7	VERTICAL STABILIZER DE-ICE BOOT	1	3.5
5	5E1319	50-389028	ENGINE INLET ANTI-ICER	2	

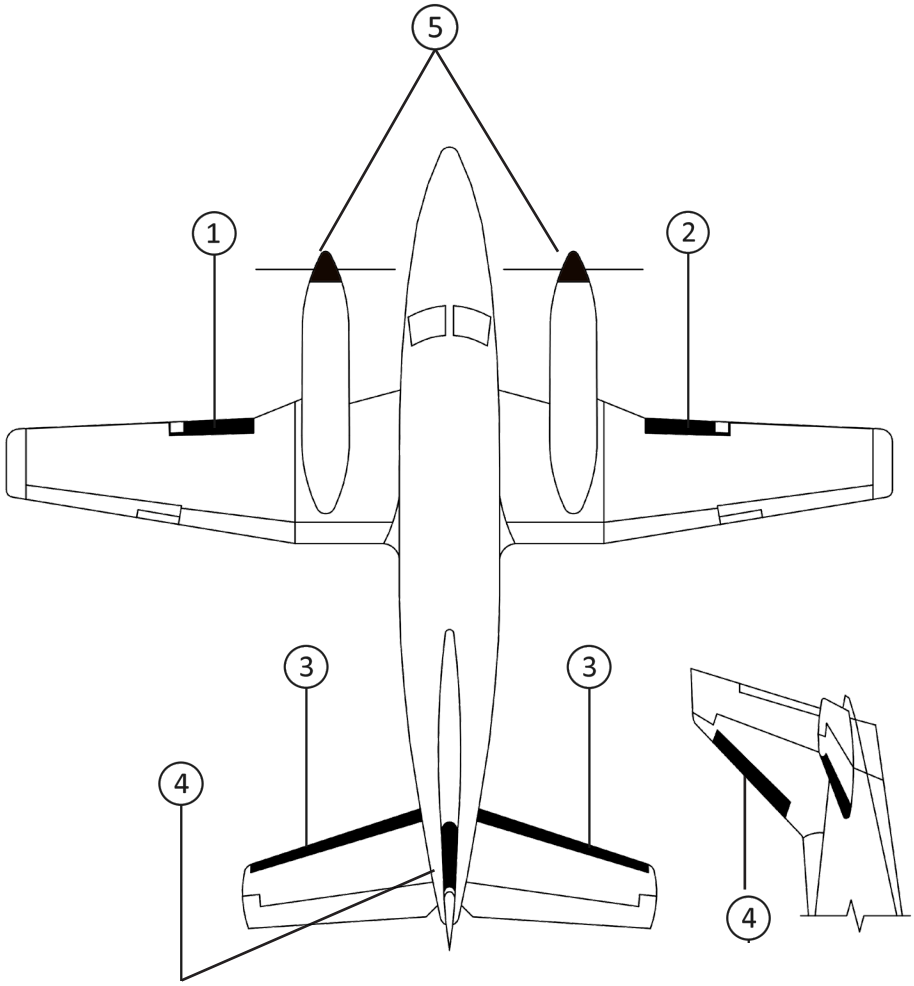

BEECHCRAFT B99 (AIRLINER)

STANDARD DE-ICE BOOTS

POSITION ID	GOODRICH PART NUMBER	AIRCRAFT OEM P/N	DESCRIPTION	QTY PER AIRCRAFT	WT
1	23S-2014-11-1	50-380139-1	BREAK-LIGHT LH DE-ICE BOOT	1	6.6
2	23S-2014-11-2	50-380139-2	BREAK-LIGHT RH DE-ICE BOOT	1	6.6
3	23S-2128-5-1	99-380009-3	HORIZONTAL STABILIZER LH/RH DE-ICE BOOT	2	4.4
4	23S-2128-6-1	99-380009-1	VERTICAL STABILIZER DE-ICE BOOT	1	3.1
5	5E1319	50-389028	ENGINE INLET ANTI-ICER	2	

OPTIONAL STANDARD DE-ICE BOOTS

POSITION ID	GOODRICH PART NUMBER	AIRCRAFT OEM P/N	DESCRIPTION	QTY PER AIRCRAFT	WT
3	23S-2128-3-1*	115-380114-5	HORIZONTAL STABILIZER LH/RH DE-ICE BOOT	2	5.5
4	23S-2128-4-1*	115-380114-7	VERTICAL STABILIZER DE-ICE BOOT	1	3.5

*ONLY FOR S/N U-146 AND U-148 THRU U-150

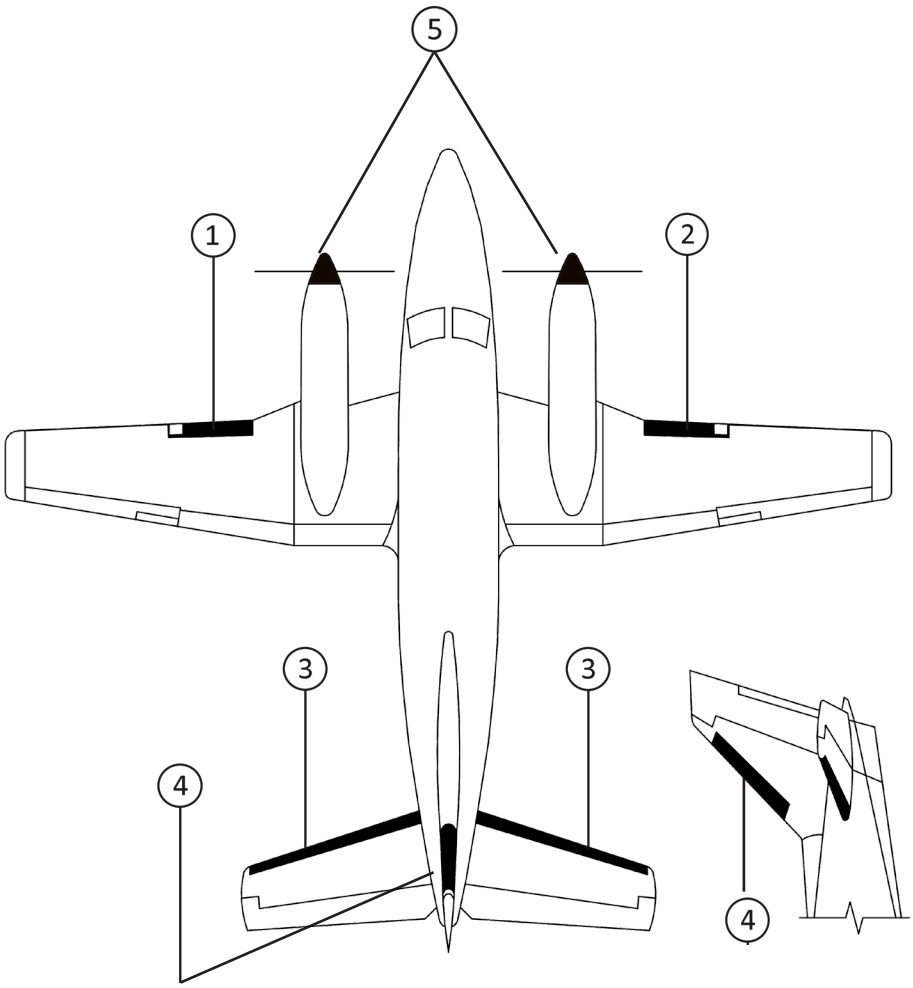

BEECHCRAFT C99 (COMMUTER)

STANDARD DE-ICE BOOTS

POSITION ID	GOODRICH PART NUMBER	AIRCRAFT OEM P/N	DESCRIPTION	QTY PER AIRCRAFT	WT
1	25S-7D5064-21	99-380014-1	WING LH DE-ICE BOOT	1	4.5
2	25S-7D5064-22	99-380014-2	WING RH DE-ICE BOOT	1	4.5
3	25S-7D5064-07	99-380014-3	HORIZONTAL STABILIZER LH/RH DE-ICE BOOT	2	3.1
4	25S-7D5064-23	99-380014-7	VERTICAL STABILIZER DE-ICE BOOT	1	2.2

OPTIONAL STANDARD DE-ICE BOOTS

POSITION ID	GOODRICH PART NUMBER	AIRCRAFT OEM P/N	DESCRIPTION	QTY PER AIRCRAFT	WT
4	25S-7D5064-12*	99-380014-5	VERTICAL STABILIZER DE-ICE BOOT	1	1.9

*ONLY FOR S/N U-165 THRU U-201 (REPLACED BY 25S-7D5065-23 ON S/N U-202 UP)

FASTboot® DE-ICE BOOTS

POSITION ID	GOODRICH PART NUMBER	AIRCRAFT OEM P/N	DESCRIPTION	QTY PER AIRCRAFT	WT
1	P25S-7D5064-21	99-380014-1	FASTBOOT® WING LH DE-ICE BOOT	1	4.5
2	P25S-7D5064-22	99-380014-2	FASTBOOT® WING RH DE-ICE BOOT	1	4.5
3	P25S-7D5064-07	99-380014-3	FASTBOOT® HORIZONTAL STABILIZER LH/RH DE-ICE BOOT	2	3.1
4	P25S-7D5064-23	99-380014-7	FASTBOOT® VERTICAL STABILIZER DE-ICE BOOT	1	2.2

OPTIONAL FASTboot® DE-ICE BOOTS

POSITION ID	GOODRICH PART NUMBER	AIRCRAFT OEM P/N	DESCRIPTION	QTY PER AIRCRAFT	WT
4	P25S-7D5064-12	99-380009-1	FASTBOOT® VERTICAL STABILIZER DE-ICE BOOT	1	1.9

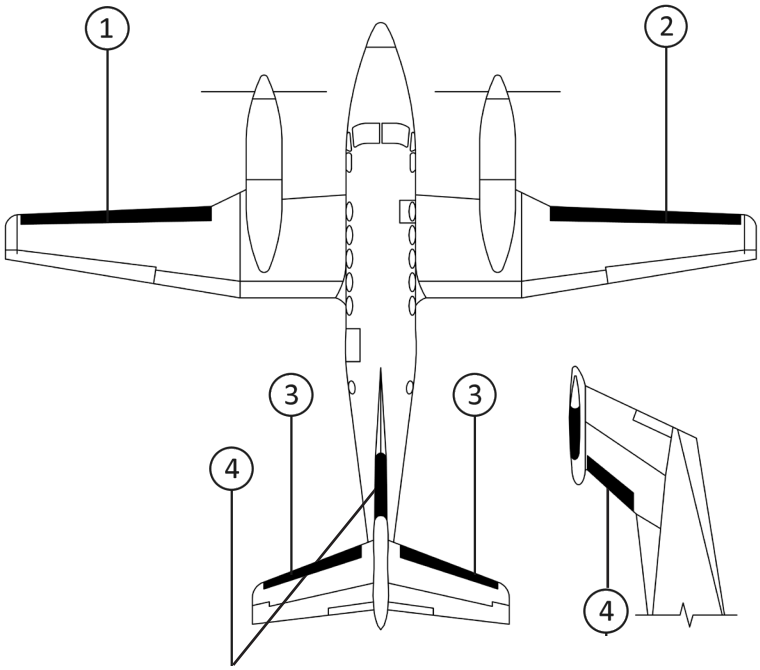

BEECHCRAFT 100 (KING AIR)

STANDARD DE-ICE BOOTS

POSITION ID	GOODRICH PART NUMBER	AIRCRAFT OEM P/N	DESCRIPTION	QTY PER AIRCRAFT	WT
1	23S-2014-11-1	50-380139-1	BREAK-LIGHT LH DE-ICE BOOT	1	6.6
2	23S-2014-11-2	50-380139-2	BREAK-LIGHT RH DE-ICE BOOT	1	6.6
3	23S-2128-5-1	99-380009-3	HORIZONTAL STABILIZER LH/RH DE-ICE BOOT	2	4.4
4	23S-2128-6-1	99-380009-1	VERTICAL STABILIZER DE-ICE BOOT	1	3.1
5	5E1319	50-389028	ENGINE INLET ANTI-ICER	2	

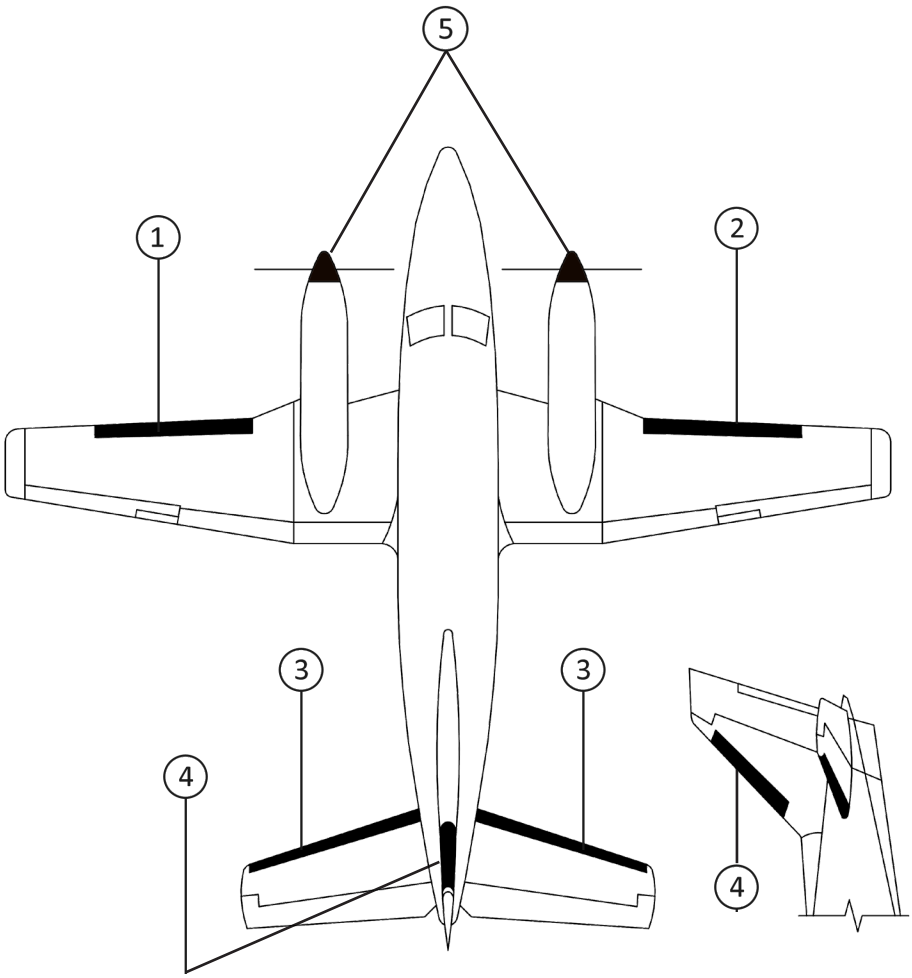

BEECHCRAFT A100 (KING AIR)

STANDARD DE-ICE BOOTS

POSITION ID	GOODRICH PART NUMBER	AIRCRAFT OEM P/N	DESCRIPTION	QTY PER AIRCRAFT	WT
1	25S-7D5064-01	50-380139-1	WING BREAK-TIP LH DE-ICE BOOT	1	5.1
2	25S-7D5064-02	50-380139-2	WING BREAK-TIP RH DE-ICE BOOT	1	5.1
3	25S-7D5064-07	99-380014-3	HORIZONTAL STABILIZER LH/RH DE-ICE BOOT	2	3.1
4	25S-7D5064-23	99-380014-7	VERTICAL STABILIZER DE-ICE BOOT	1	2.2
5	5E1319	50-389028	ENGINE INLET ANTI-ICER	2	

FASTboot® DE-ICE BOOTS

POSITION ID	GOODRICH PART NUMBER	AIRCRAFT OEM P/N	DESCRIPTION	QTY PER AIRCRAFT	WT
1	P25S-7D5064-01	50-380139-1	FASTBOOT® WING BREAK-TIP LH DE-ICE BOOT	1	5.1
2	P25S-7D5064-02	50-380139-2	FASTBOOT® WING BREAK-TIP RH DE-ICE BOOT	1	5.1
3	P25S-7D5064-07	99-380014-3	FASTBOOT® HORIZONTAL STABILIZER LH/RH DE-ICE BOOT	2	3.1
4	P25S-7D5064-23	99-380014-7	FASTBOOT® VERTICAL STABILIZER DE-ICE BOOT	1	2.2

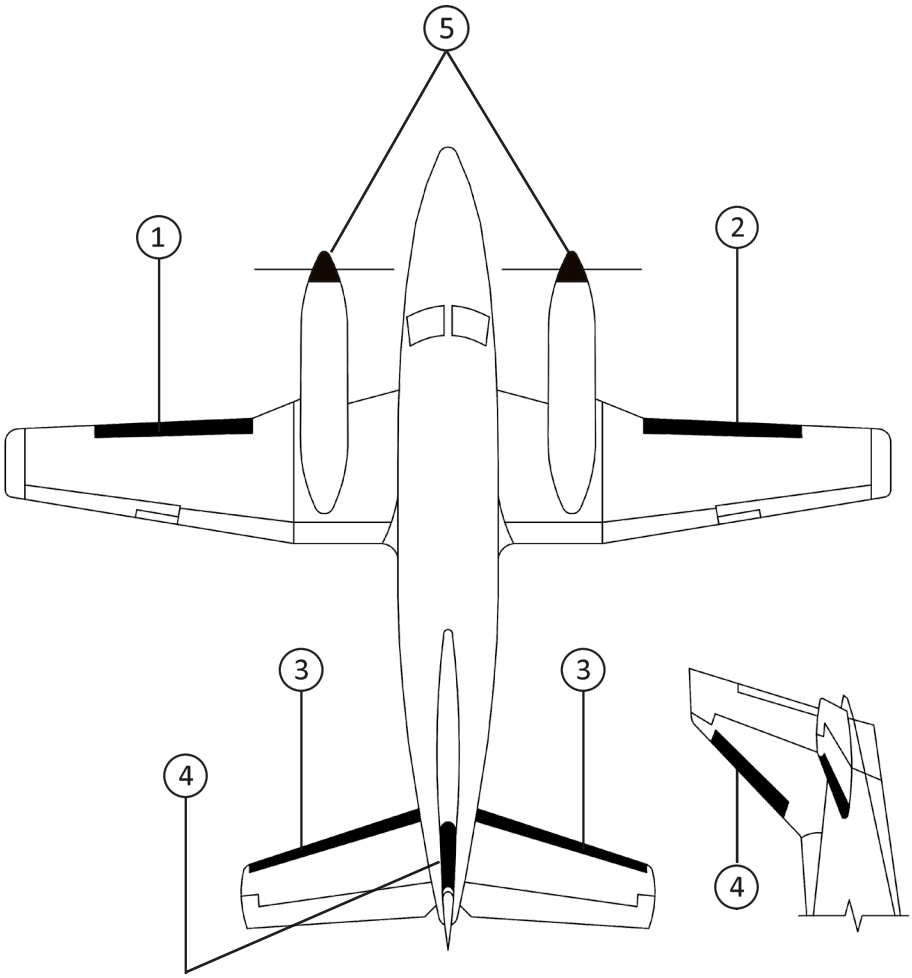

BEECHCRAFT A100A (KING AIR)

STANDARD DE-ICE BOOTS

POSITION ID	GOODRICH PART NUMBER	AIRCRAFT OEM P/N	DESCRIPTION	QTY PER AIRCRAFT	WT
1	5E1319	50-389028	ENGINE INLET ANTI-ICER	2	

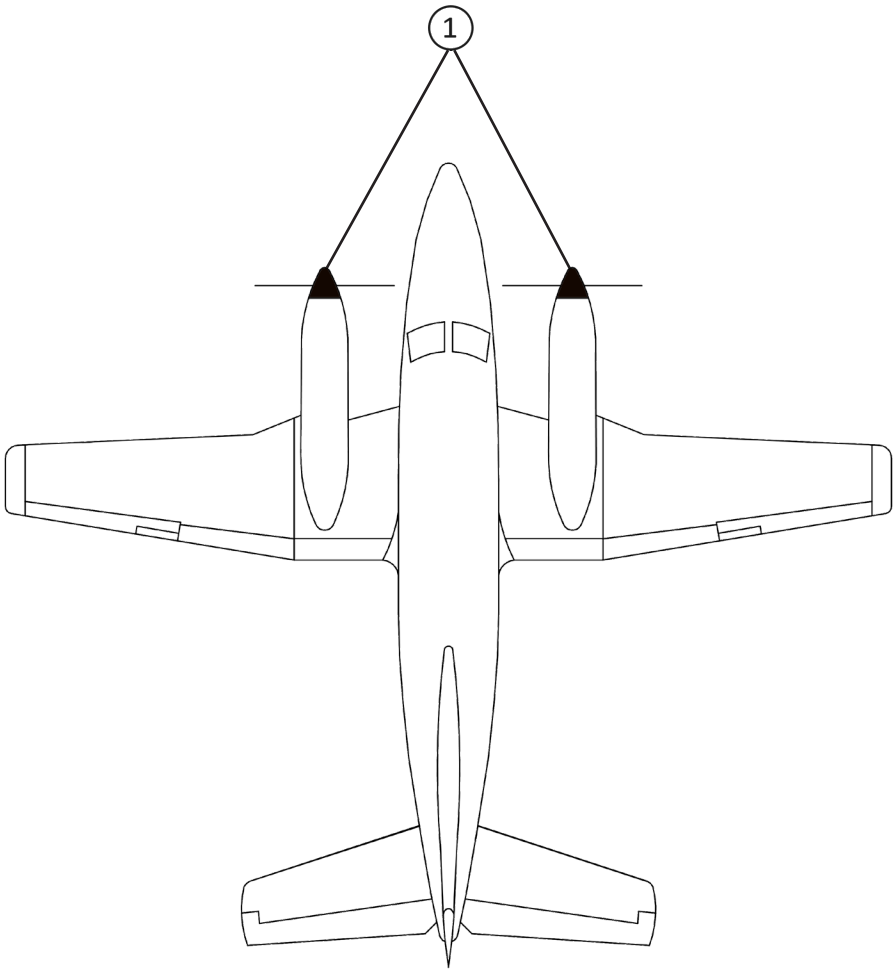

BEECHCRAFT A100C (KING AIR)

STANDARD DE-ICE BOOTS

POSITION ID	GOODRICH PART NUMBER	AIRCRAFT OEM P/N	DESCRIPTION	QTY PER AIRCRAFT	WT
1	5E1319	50-389028	ENGINE INLET ANTI-ICER	2	

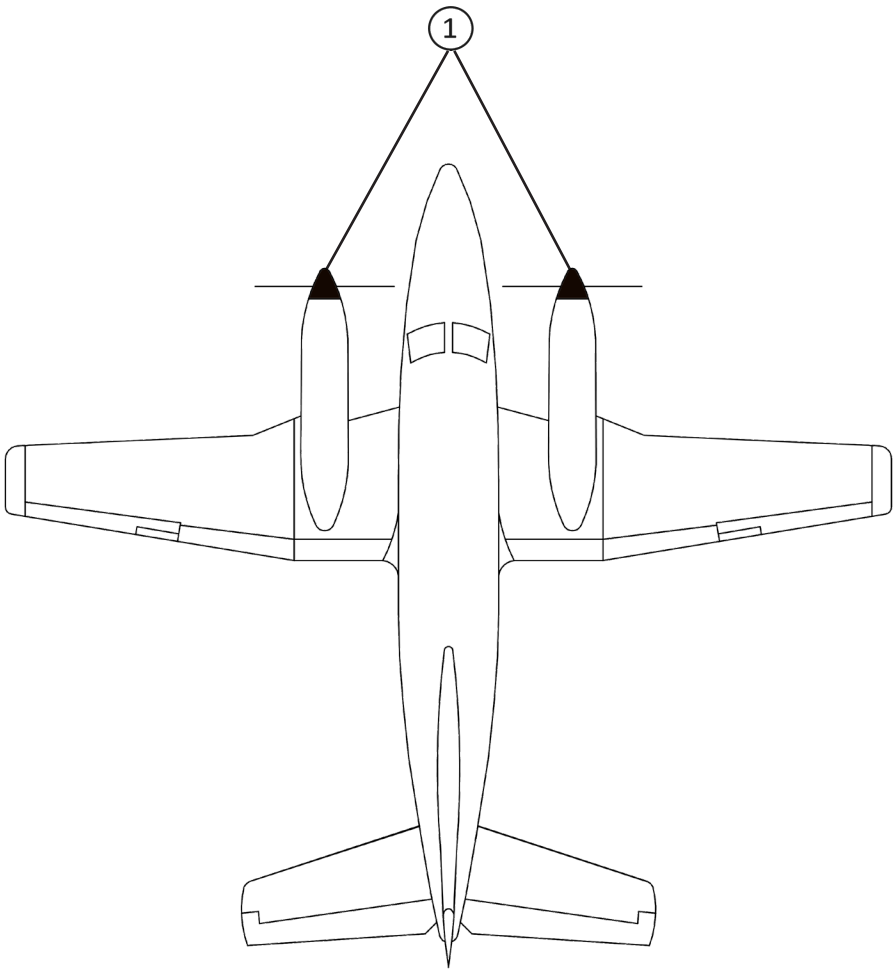

BEECHCRAFT B100 (KING AIR)

STANDARD DE-ICE BOOTS

POSITION ID	GOODRICH PART NUMBER	AIRCRAFT OEM P/N	DESCRIPTION	QTY PER AIRCRAFT	WT
1	25S-7D5064-01	50-380139-1	WING BREAK-TIP LH DE-ICE BOOT	1	5.1
2	25S-7D5064-02	50-380139-2	WING BREAK-TIP RH DE-ICE BOOT	1	5.1
3	25S-7D5064-07	99-380014-3	HORIZONTAL STABILIZER LH/RH DE-ICE BOOT	2	3.1
4	25S-7D5064-23	99-380014-7	VERTICAL STABILIZER DE-ICE BOOT	1	2.2

FASTboot® DE-ICE BOOTS

POSITION ID	GOODRICH PART NUMBER	AIRCRAFT OEM P/N	DESCRIPTION	QTY PER AIRCRAFT	WT
1	P25S-7D5064-01	50-380139-1	FASTBOOT® WING BREAK-TIP LH DE-ICE BOOT	1	5.1
2	P25S-7D5064-02	50-380139-2	FASTBOOT® WING BREAK-TIP RH DE-ICE BOOT	1	5.1
3	P25S-7D5064-07	99-380014-3	FASTBOOT® HORIZONTAL STABILIZER LH/RH DE-ICE BOOT	2	3.1
4	P25S-7D5064-23	99-380014-7	FASTBOOT® VERTICAL STABILIZER DE-ICE BOOT	1	2.2

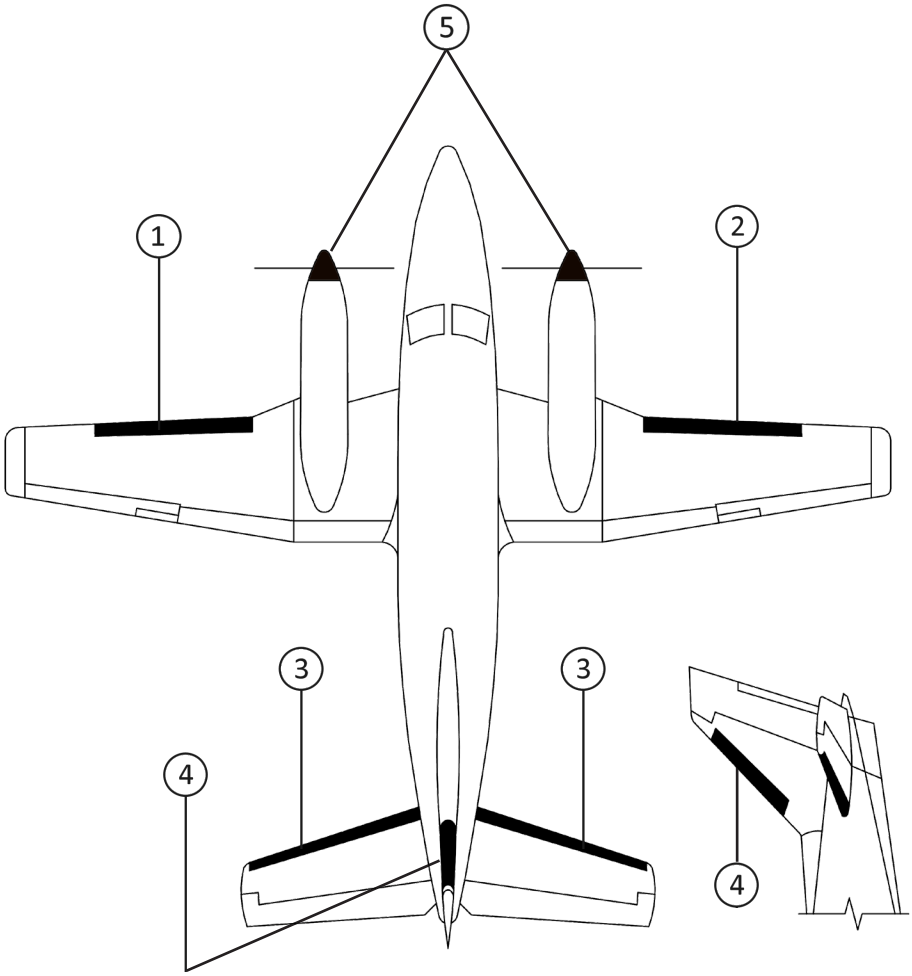

BEECHCRAFT 200 (SUPER KING AIR)

STANDARD DE-ICE BOOTS

POSITION ID	GOODRICH PART NUMBER	AIRCRAFT OEM P/N	DESCRIPTION	QTY PER AIRCRAFT	WT
1	25S-7D5041-07	101-380001-7	INBOARD WING LH DE-ICE BOOT	1	1.6
2	25S-7D5041-08	101-380001-8	INBOARD WING RH DE-ICE BOOT	1	1.6
3	25S-7D5041-01	101-380001-1	OUTBOARD WING LH DE-ICE BOOT	1	6.2
4	25S-7D5041-02	101-380001-2	OUTBOARD WING RH DE-ICE BOOT	1	6.2
5	25S-7D5041-05	101-380001-5	HORIZONTAL STABILIZER LH/ RH DE-ICE BOOT	2	2.8

FASTboot® DE-ICE BOOTS

POSITION ID	GOODRICH PART NUMBER	AIRCRAFT OEM P/N	DESCRIPTION	QTY PER AIRCRAFT	WT
1	P25S-7D5041-07	101-380001-25	FASTBOOT® INBOARD WING LH DE-ICE BOOT	1	1.6
2	P25S-7D5041-08	101-380001-26	FASTBOOT® INBOARD WING RH DE-ICE BOOT	1	1.6
3	P25S-7D5041-01	101-380001-21	FASTBOOT® OUTBOARD WING LH DE-ICE BOOT	1	6.2
4	P25S-7D5041-02	101-380001-22	FASTBOOT® OUTBOARD WING RH DE-ICE BOOT	1	6.2
5	P25S-7D5041-05	101-380001-23	FASTBOOT® HORIZONTAL STABILIZER LH/RH DE-ICE BOOT	2	2.8

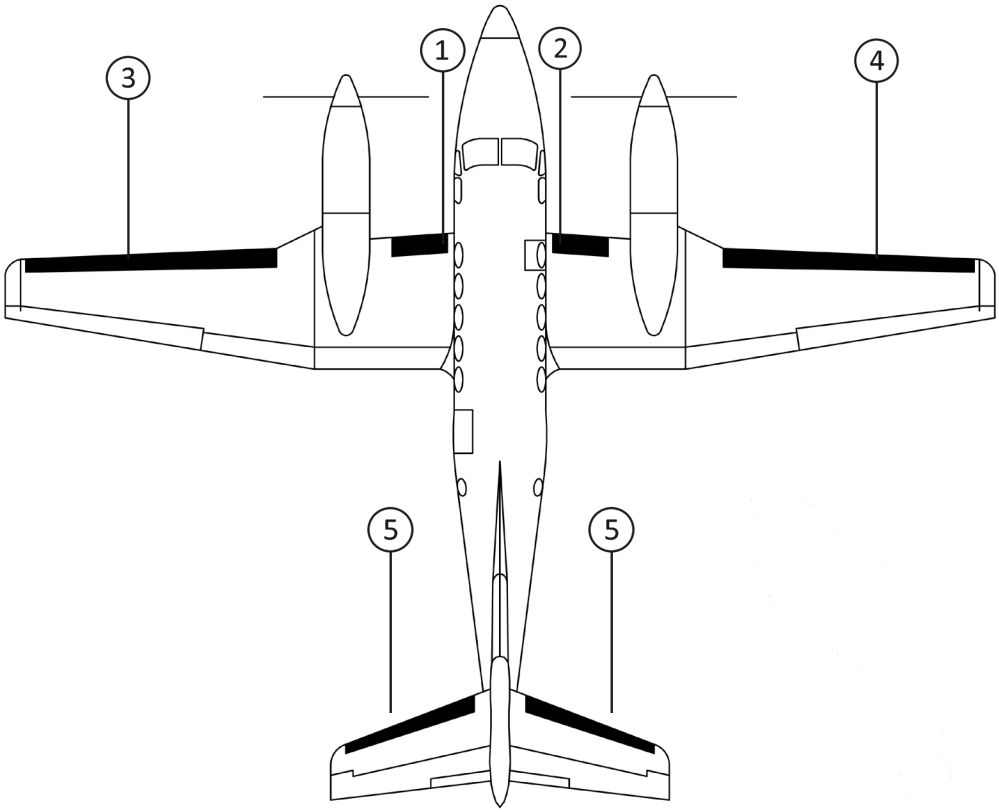

BEECHCRAFT A200 (SUPER KING AIR)

STANDARD DE-ICE BOOTS

POSITION ID	GOODRICH PART NUMBER	AIRCRAFT OEM P/N	DESCRIPTION	QTY PER AIRCRAFT	WT
1	25S-7D5041-07	101-380001-7	INBOARD WING LH DE-ICE BOOT	1	1.6
2	25S-7D5041-08	101-380001-8	INBOARD WING RH DE-ICE BOOT	1	1.6
3	25S-7D5041-01	101-380001-1	OUTBOARD WING LH DE-ICE BOOT	1	6.2
4	25S-7D5041-02	101-380001-2	OUTBOARD WING RH DE-ICE BOOT	1	6.2
5	25S-7D5041-05	101-380001-5	HORIZONTAL STABILIZER LH/ RH DE-ICE BOOT	2	2.8

FASTboot® DE-ICE BOOTS

POSITION ID	GOODRICH PART NUMBER	AIRCRAFT OEM P/N	DESCRIPTION	QTY PER AIRCRAFT	WT
1	P25S-7D5041-07	101-380001-25	FASTBOOT® INBOARD WING LH DE-ICE BOOT	1	1.6
2	P25S-7D5041-08	101-380001-26	FASTBOOT® INBOARD WING RH DE-ICE BOOT	1	1.6
3	P25S-7D5041-01	101-380001-21	FASTBOOT® OUTBOARD WING LH DE-ICE BOOT	1	6.2
4	P25S-7D5041-02	101-380001-22	FASTBOOT® OUTBOARD WING RH DE-ICE BOOT	1	6.2
5	P25S-7D5041-05	101-380001-23	FASTBOOT® HORIZONTAL STABILIZER LH/RH DE-ICE BOOT	2	2.8

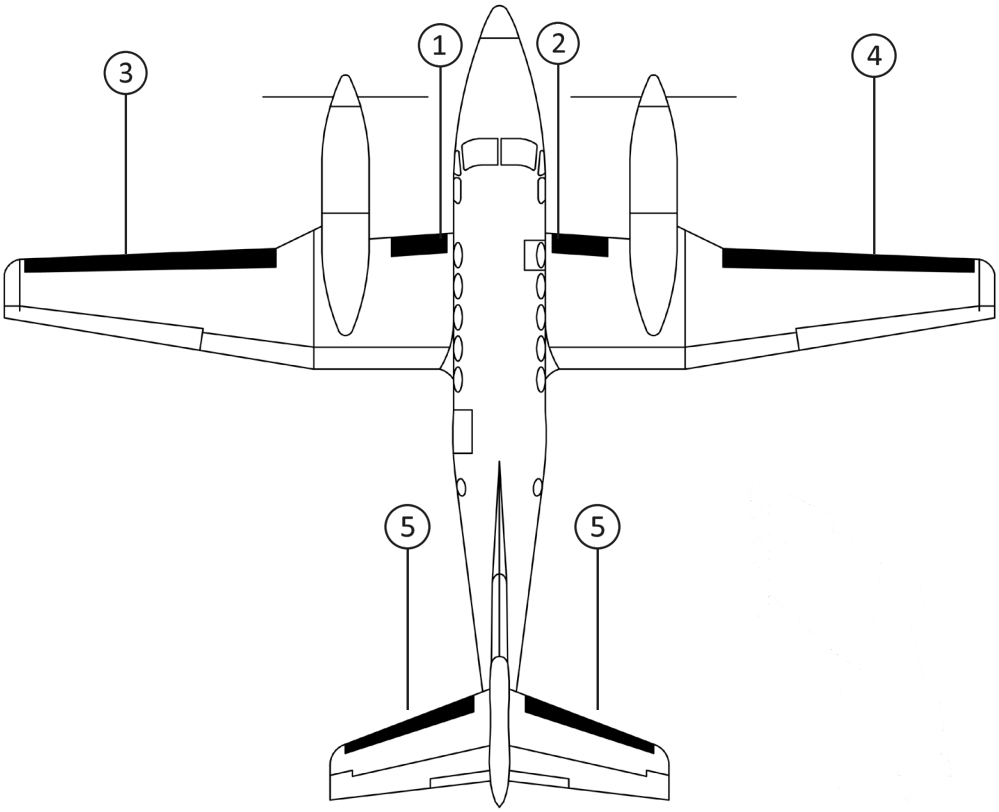

BEECHCRAFT A200C (SUPER KING AIR)

STANDARD DE-ICE BOOTS

POSITION ID	GOODRICH PART NUMBER	AIRCRAFT OEM P/N	DESCRIPTION	QTY PER AIRCRAFT	WT
1	25S-7D5041-07	101-380001-7	INBOARD WING LH DE-ICE BOOT	1	1.6
2	25S-7D5041-08	101-380001-8	INBOARD WING RH DE-ICE BOOT	1	1.6
3	25S-7D5041-01	101-380001-1	OUTBOARD WING LH DE-ICE BOOT	1	6.2
4	25S-7D5041-02	101-380001-2	OUTBOARD WING RH DE-ICE BOOT	1	6.2
5	25S-7D5041-05	101-380001-5	HORIZONTAL STABILIZER LH/ RH DE-ICE BOOT	2	2.8

FASTboot® DE-ICE BOOTS

POSITION ID	GOODRICH PART NUMBER	AIRCRAFT OEM P/N	DESCRIPTION	QTY PER AIRCRAFT	WT
1	P25S-7D5041-07	101-380001-25	FASTBOOT® INBOARD WING LH DE-ICE BOOT	1	1.6
2	P25S-7D5041-08	101-380001-26	FASTBOOT® INBOARD WING RH DE-ICE BOOT	1	1.6
3	P25S-7D5041-01	101-380001-21	FASTBOOT® OUTBOARD WING LH DE-ICE BOOT	1	6.2
4	P25S-7D5041-02	101-380001-22	FASTBOOT® OUTBOARD WING RH DE-ICE BOOT	1	6.2
5	P25S-7D5041-05	101-380001-23	FASTBOOT® HORIZONTAL STABILIZER LH/RH DE-ICE BOOT	2	2.8

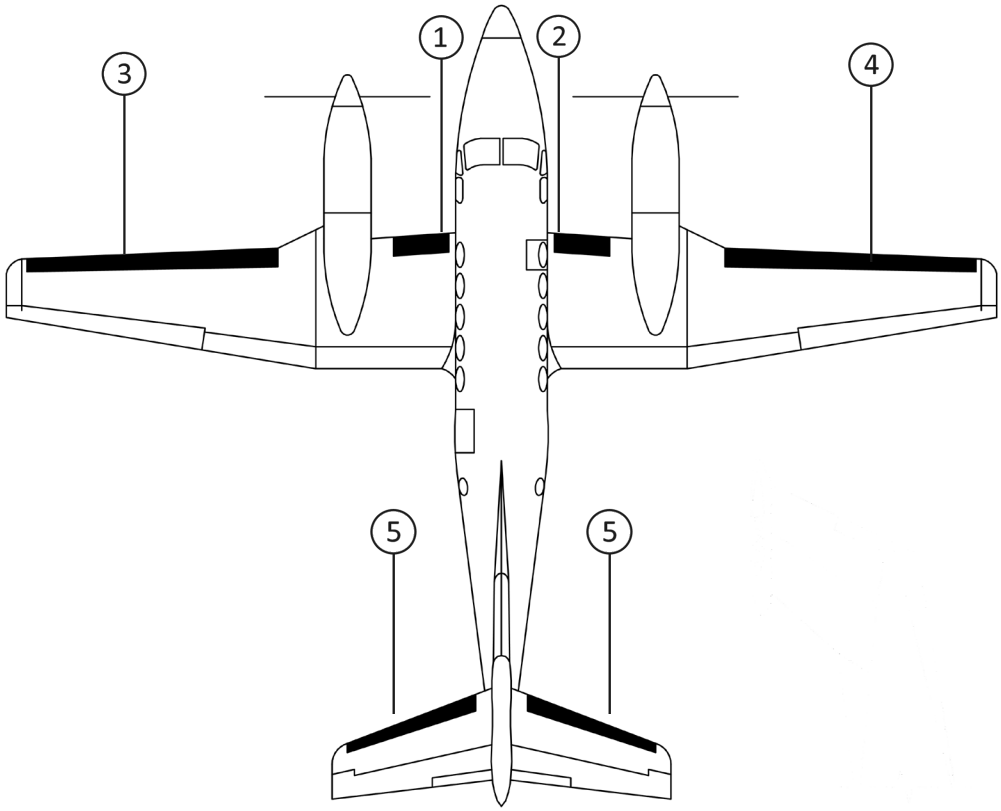

BEECHCRAFT A200CT (SUPER KING AIR)

STANDARD DE-ICE BOOTS

POSITION ID	GOODRICH PART NUMBER	AIRCRAFT OEM P/N	DESCRIPTION	QTY PER AIRCRAFT	WT
1	25S-7D5041-07	101-380001-7	INBOARD WING LH DE-ICE BOOT	1	1.6
2	25S-7D5041-08	101-380001-8	INBOARD WING RH DE-ICE BOOT	1	1.6
3	25S-7D5041-01	101-380001-1	OUTBOARD WING LH DE-ICE BOOT	1	6.2
4	25S-7D5041-02	101-380001-2	OUTBOARD WING RH DE-ICE BOOT	1	6.2
5	25S-7D5041-05	101-380001-5	HORIZONTAL STABILIZER LH/ RH DE-ICE BOOT	2	2.8

FASTboot® DE-ICE BOOTS

POSITION ID	GOODRICH PART NUMBER	AIRCRAFT OEM P/N	DESCRIPTION	QTY PER AIRCRAFT	WT
1	P25S-7D5041-07	101-380001-25	FASTBOOT® INBOARD WING LH DE-ICE BOOT	1	1.6
2	P25S-7D5041-08	101-380001-26	FASTBOOT® INBOARD WING RH DE-ICE BOOT	1	1.6
3	P25S-7D5041-01	101-380001-21	FASTBOOT® OUTBOARD WING LH DE-ICE BOOT	1	6.2
4	P25S-7D5041-02	101-380001-22	FASTBOOT® OUTBOARD WING RH DE-ICE BOOT	1	6.2
5	P25S-7D5041-05	101-380001-23	FASTBOOT® HORIZONTAL STABILIZER LH/RH DE-ICE BOOT	2	2.8

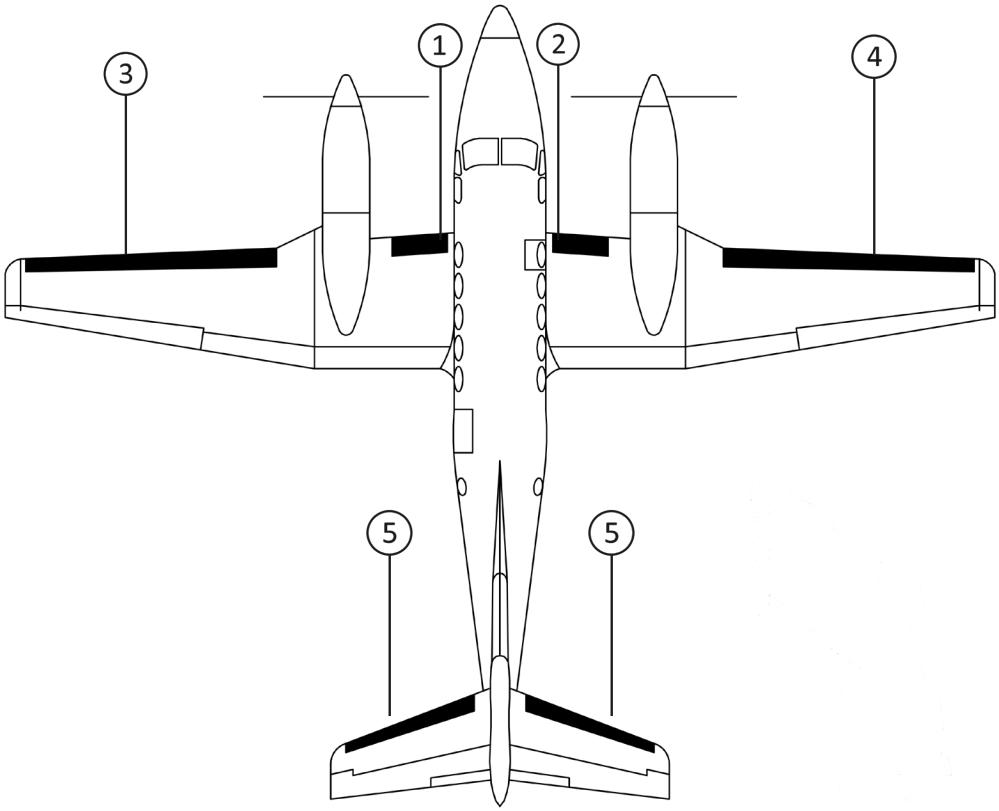

BEECHCRAFT B200 (SUPER KING AIR)

STANDARD DE-ICE BOOTS

POSITION ID	GOODRICH PART NUMBER	AIRCRAFT OEM P/N	DESCRIPTION	QTY PER AIRCRAFT	WT
1	25S-7D5041-07	101-380001-7	INBOARD WING LH DE-ICE BOOT	1	1.6
2	25S-7D5041-08	101-380001-8	INBOARD WING RH DE-ICE BOOT	1	1.6
3	25S-7D5041-01	101-380001-1	OUTBOARD WING LH DE-ICE BOOT	1	6.2
4	25S-7D5041-02	101-380001-2	OUTBOARD WING RH DE-ICE BOOT	1	6.2
5	25S-7D5041-05	101-380001-5	HORIZONTAL STABILIZER LH/ RH DE-ICE BOOT	2	2.8

FASTboot® DE-ICE BOOTS

POSITION ID	GOODRICH PART NUMBER	AIRCRAFT OEM P/N	DESCRIPTION	QTY PER AIRCRAFT	WT
1	P25S-7D5041-07	101-380001-25	FASTBOOT® INBOARD WING LH DE-ICE BOOT	1	1.6
2	P25S-7D5041-08	101-380001-26	FASTBOOT® INBOARD WING RH DE-ICE BOOT	1	1.6
3	P25S-7D5041-01	101-380001-21	FASTBOOT® OUTBOARD WING LH DE-ICE BOOT	1	6.2
4	P25S-7D5041-02	101-380001-22	FASTBOOT® OUTBOARD WING RH DE-ICE BOOT	1	6.2
5	P25S-7D5041-05	101-380001-23	FASTBOOT® HORIZONTAL STABILIZER LH/RH DE-ICE BOOT	2	2.8

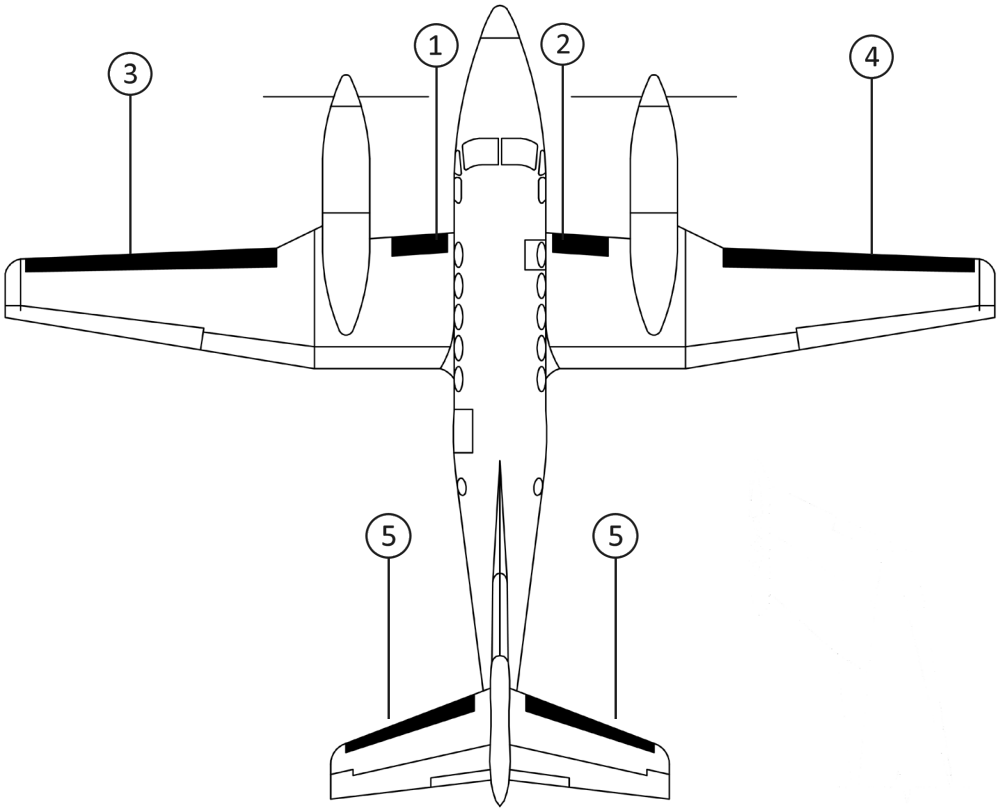

BEECHCRAFT 200C (SUPER KING AIR)

STANDARD DE-ICE BOOTS

POSITION ID	GOODRICH PART NUMBER	AIRCRAFT OEM P/N	DESCRIPTION	QTY PER AIRCRAFT	WT
1	25S-7D5041-07	101-380001-7	INBOARD WING LH DE-ICE BOOT	1	1.6
2	25S-7D5041-08	101-380001-8	INBOARD WING RH DE-ICE BOOT	1	1.6
3	25S-7D5041-01	101-380001-1	OUTBOARD WING LH DE-ICE BOOT	1	6.2
4	25S-7D5041-02	101-380001-2	OUTBOARD WING RH DE-ICE BOOT	1	6.2
5	25S-7D5041-05	101-380001-5	HORIZONTAL STABILIZER LH/ RH DE-ICE BOOT	2	2.8

FASTboot® DE-ICE BOOTS

POSITION ID	GOODRICH PART NUMBER	AIRCRAFT OEM P/N	DESCRIPTION	QTY PER AIRCRAFT	WT
1	P25S-7D5041-07	101-380001-25	FASTBOOT® INBOARD WING LH DE-ICE BOOT	1	1.6
2	P25S-7D5041-08	101-380001-26	FASTBOOT® INBOARD WING RH DE-ICE BOOT	1	1.6
3	P25S-7D5041-01	101-380001-21	FASTBOOT® OUTBOARD WING LH DE-ICE BOOT	1	6.2
4	P25S-7D5041-02	101-380001-22	FASTBOOT® OUTBOARD WING RH DE-ICE BOOT	1	6.2
5	P25S-7D5041-05	101-380001-23	FASTBOOT® HORIZONTAL STABILIZER LH/RH DE-ICE BOOT	2	2.8

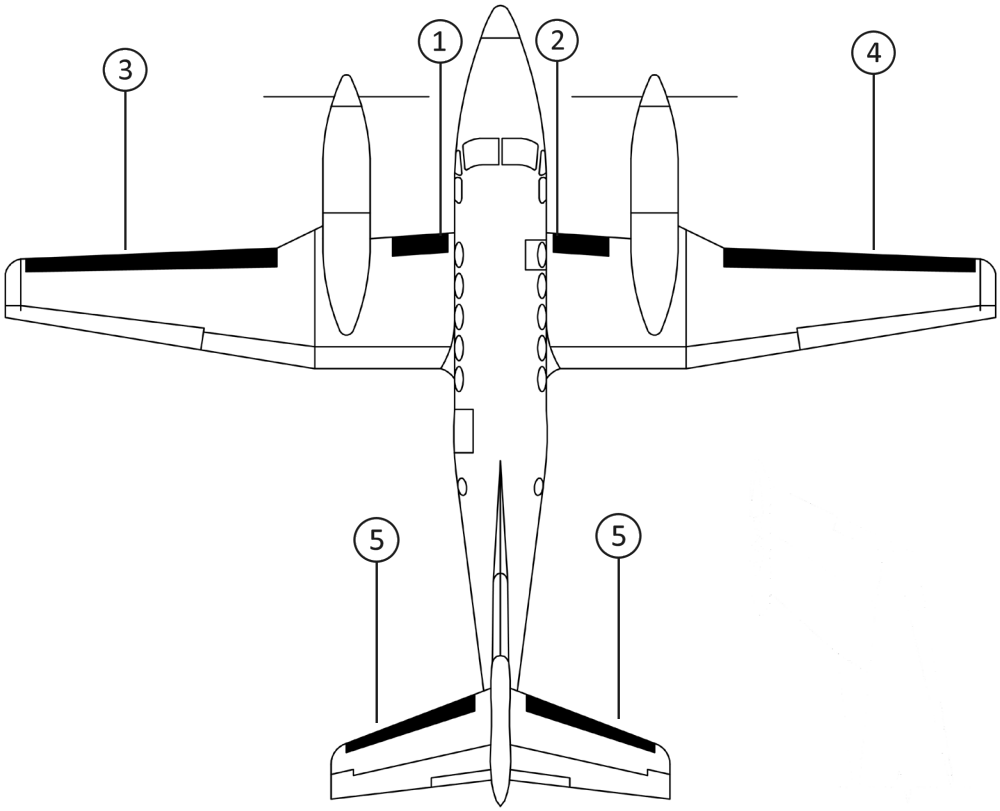

BEECHCRAFT B200C (SUPER KING AIR)

STANDARD DE-ICE BOOTS

POSITION ID	GOODRICH PART NUMBER	AIRCRAFT OEM P/N	DESCRIPTION	QTY PER AIRCRAFT	WT
1	25S-7D5041-07	101-380001-7	INBOARD WING LH DE-ICE BOOT	1	1.6
2	25S-7D5041-08	101-380001-8	INBOARD WING RH DE-ICE BOOT	1	1.6
3	25S-7D5041-01	101-380001-1	OUTBOARD WING LH DE-ICE BOOT	1	6.2
4	25S-7D5041-02	101-380001-2	OUTBOARD WING RH DE-ICE BOOT	1	6.2
5	25S-7D5041-05	101-380001-5	HORIZONTAL STABILIZER LH/ RH DE-ICE BOOT	2	2.8

FASTboot® DE-ICE BOOTS

POSITION ID	GOODRICH PART NUMBER	AIRCRAFT OEM P/N	DESCRIPTION	QTY PER AIRCRAFT	WT
1	P25S-7D5041-07	101-380001-25	FASTBOOT® INBOARD WING LH DE-ICE BOOT	1	1.6
2	P25S-7D5041-08	101-380001-26	FASTBOOT® INBOARD WING RH DE-ICE BOOT	1	1.6
3	P25S-7D5041-01	101-380001-21	FASTBOOT® OUTBOARD WING LH DE-ICE BOOT	1	6.2
4	P25S-7D5041-02	101-380001-22	FASTBOOT® OUTBOARD WING RH DE-ICE BOOT	1	6.2
5	P25S-7D5041-05	101-380001-23	FASTBOOT® HORIZONTAL STABILIZER LH/RH DE-ICE BOOT	2	2.8

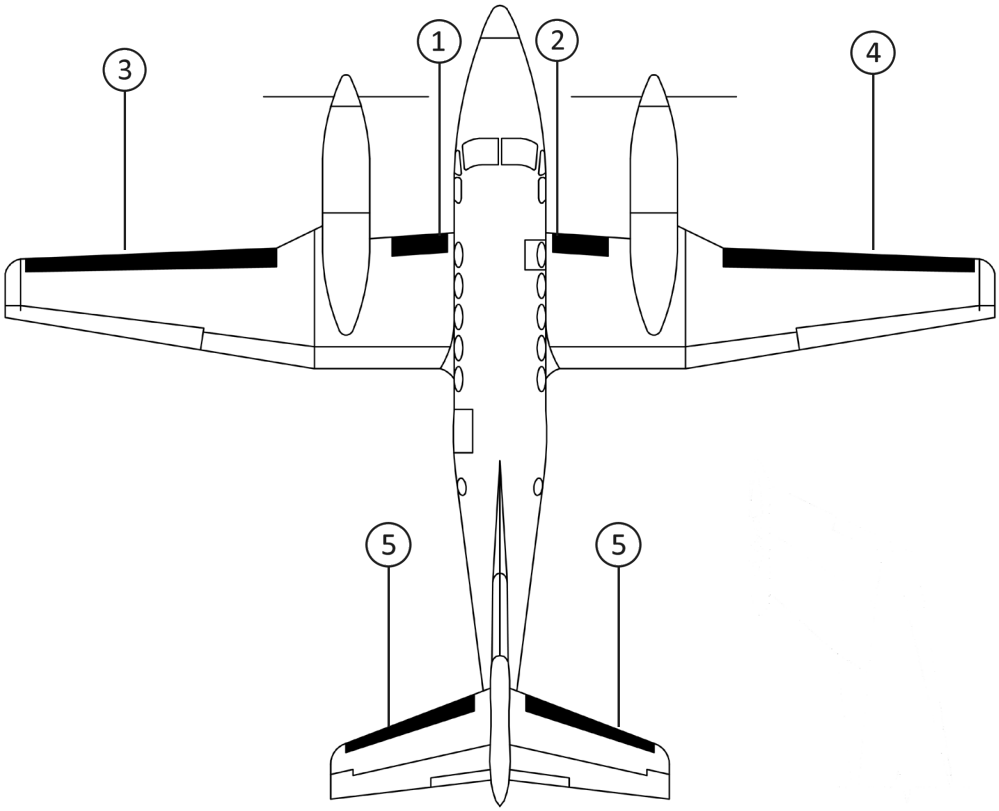

BEECHCRAFT 200CT (SUPER KING AIR)

STANDARD DE-ICE BOOTS

POSITION ID	GOODRICH PART NUMBER	AIRCRAFT OEM P/N	DESCRIPTION	QTY PER AIRCRAFT	WT
1	25S-7D5041-07	101-380001-7	INBOARD WING LH DE-ICE BOOT	1	1.6
2	25S-7D5041-08	101-380001-8	INBOARD WING RH DE-ICE BOOT	1	1.6
3	25S-7D5041-01	101-380001-1	OUTBOARD WING LH DE-ICE BOOT	1	6.2
4	25S-7D5041-02	101-380001-2	OUTBOARD WING RH DE-ICE BOOT	1	6.2
5	25S-7D5041-05	101-380001-5	HORIZONTAL STABILIZER LH/ RH DE-ICE BOOT	2	2.8

FASTboot® DE-ICE BOOTS

POSITION ID	GOODRICH PART NUMBER	AIRCRAFT OEM P/N	DESCRIPTION	QTY PER AIRCRAFT	WT
1	P25S-7D5041-07	101-380001-25	FASTBOOT® INBOARD WING LH DE-ICE BOOT	1	1.6
2	P25S-7D5041-08	101-380001-26	FASTBOOT® INBOARD WING RH DE-ICE BOOT	1	1.6
3	P25S-7D5041-01	101-380001-21	FASTBOOT® OUTBOARD WING LH DE-ICE BOOT	1	6.2
4	P25S-7D5041-02	101-380001-22	FASTBOOT® OUTBOARD WING RH DE-ICE BOOT	1	6.2
5	P25S-7D5041-05	101-380001-23	FASTBOOT® HORIZONTAL STABILIZER LH/RH DE-ICE BOOT	2	2.8

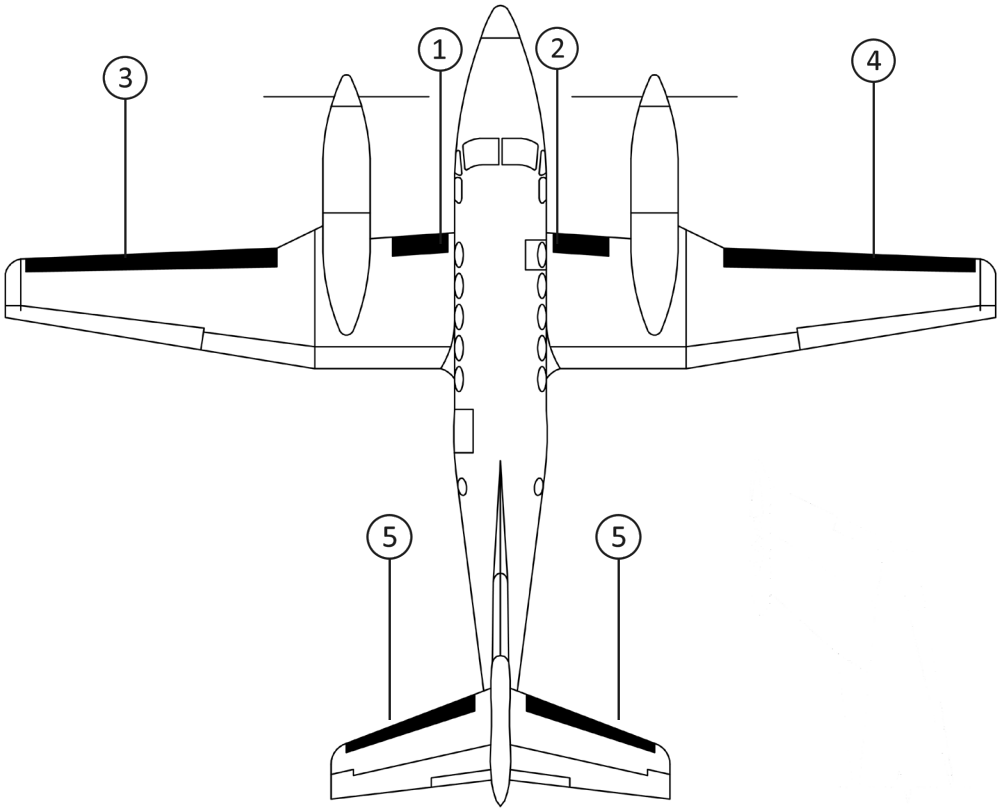

BEECHCRAFT B200CT (SUPER KING AIR)

STANDARD DE-ICE BOOTS

POSITION ID	GOODRICH PART NUMBER	AIRCRAFT OEM P/N	DESCRIPTION	QTY PER AIRCRAFT	WT
1	25S-7D5041-07	101-380001-7	INBOARD WING LH DE-ICE BOOT	1	1.6
2	25S-7D5041-08	101-380001-8	INBOARD WING RH DE-ICE BOOT	1	1.6
3	25S-7D5041-01	101-380001-1	OUTBOARD WING LH DE-ICE BOOT	1	6.2
4	25S-7D5041-02	101-380001-2	OUTBOARD WING RH DE-ICE BOOT	1	6.2
5	25S-7D5041-05	101-380001-5	HORIZONTAL STABILIZER LH/ RH DE-ICE BOOT	2	2.8

FASTboot® DE-ICE BOOTS

POSITION ID	GOODRICH PART NUMBER	AIRCRAFT OEM P/N	DESCRIPTION	QTY PER AIRCRAFT	WT
1	P25S-7D5041-07	101-380001-25	FASTBOOT® INBOARD WING LH DE-ICE BOOT	1	1.6
2	P25S-7D5041-08	101-380001-26	FASTBOOT® INBOARD WING RH DE-ICE BOOT	1	1.6
3	P25S-7D5041-01	101-380001-21	FASTBOOT® OUTBOARD WING LH DE-ICE BOOT	1	6.2
4	P25S-7D5041-02	101-380001-22	FASTBOOT® OUTBOARD WING RH DE-ICE BOOT	1	6.2
5	P25S-7D5041-05	101-380001-23	FASTBOOT® HORIZONTAL STABILIZER LH/RH DE-ICE BOOT	2	2.8

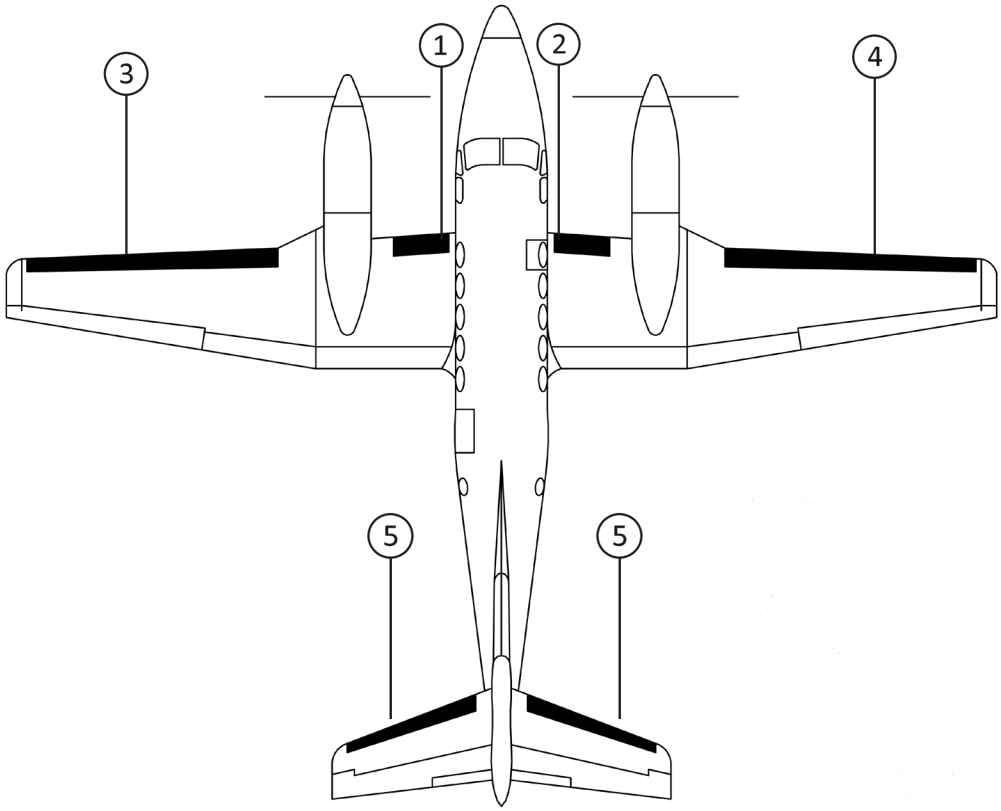

BEECHCRAFT 200T (SUPER KING AIR)

STANDARD DE-ICE BOOTS

POSITION ID	GOODRICH PART NUMBER	AIRCRAFT OEM P/N	DESCRIPTION	QTY PER AIRCRAFT	WT
1	25S-7D5041-07	101-380001-7	INBOARD WING LH DE-ICE BOOT	1	1.6
2	25S-7D5041-08	101-380001-8	INBOARD WING RH DE-ICE BOOT	1	1.6
3	25S-7D5041-01	101-380001-1	OUTBOARD WING LH DE-ICE BOOT	1	6.2
4	25S-7D5041-02	101-380001-2	OUTBOARD WING RH DE-ICE BOOT	1	6.2
5	25S-7D5041-05	101-380001-5	HORIZONTAL STABILIZER LH/ RH DE-ICE BOOT	2	2.8

FASTboot® DE-ICE BOOTS

POSITION ID	GOODRICH PART NUMBER	AIRCRAFT OEM P/N	DESCRIPTION	QTY PER AIRCRAFT	WT
1	P25S-7D5041-07	101-380001-25	FASTBOOT® INBOARD WING LH DE-ICE BOOT	1	1.6
2	P25S-7D5041-08	101-380001-26	FASTBOOT® INBOARD WING RH DE-ICE BOOT	1	1.6
3	P25S-7D5041-01	101-380001-21	FASTBOOT® OUTBOARD WING LH DE-ICE BOOT	1	6.2
4	P25S-7D5041-02	101-380001-22	FASTBOOT® OUTBOARD WING RH DE-ICE BOOT	1	6.2
5	P25S-7D5041-05	101-380001-23	FASTBOOT® HORIZONTAL STABILIZER LH/RH DE-ICE BOOT	2	2.8

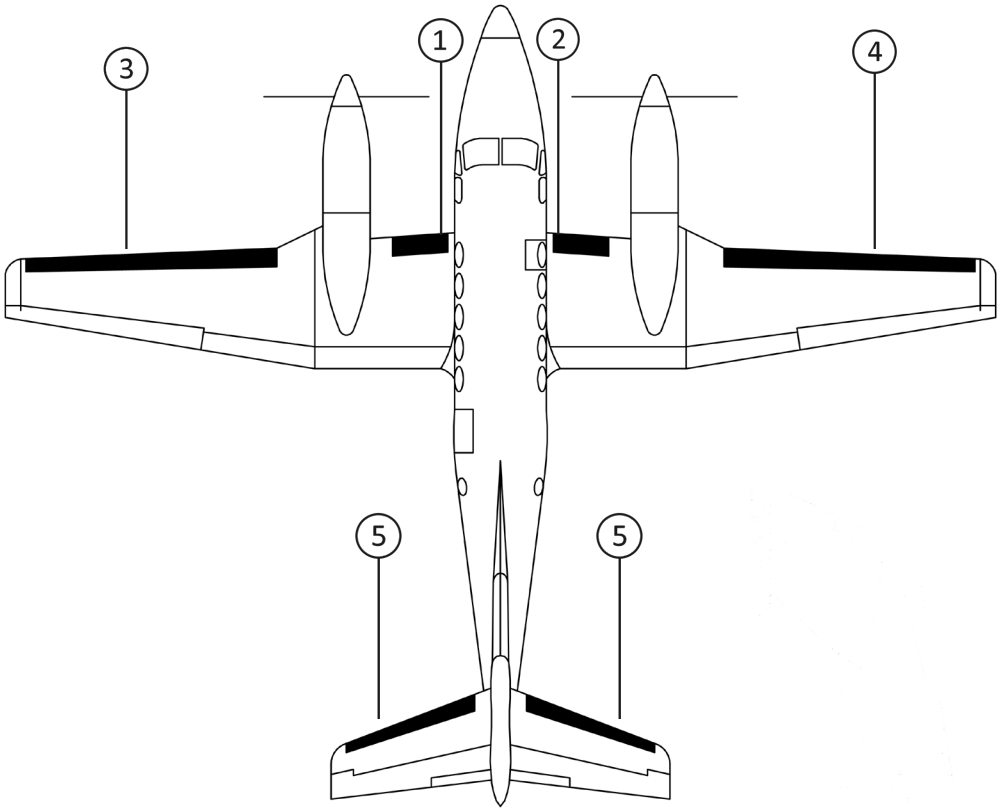

BEECHCRAFT B200T (SUPER KING AIR)

STANDARD DE-ICE BOOTS

POSITION ID	GOODRICH PART NUMBER	AIRCRAFT OEM P/N	DESCRIPTION	QTY PER AIRCRAFT	WT
1	25S-7D5041-07	101-380001-7	INBOARD WING LH DE-ICE BOOT	1	1.6
2	25S-7D5041-08	101-380001-8	INBOARD WING RH DE-ICE BOOT	1	1.6
3	25S-7D5041-01	101-380001-1	OUTBOARD WING LH DE-ICE BOOT	1	6.2
4	25S-7D5041-02	101-380001-2	OUTBOARD WING RH DE-ICE BOOT	1	6.2
5	25S-7D5041-05	101-380001-5	HORIZONTAL STABILIZER LH/ RH DE-ICE BOOT	2	2.8

FASTboot® DE-ICE BOOTS

POSITION ID	GOODRICH PART NUMBER	AIRCRAFT OEM P/N	DESCRIPTION	QTY PER AIRCRAFT	WT
1	P25S-7D5041-07	101-380001-25	FASTBOOT® INBOARD WING LH DE-ICE BOOT	1	1.6
2	P25S-7D5041-08	101-380001-26	FASTBOOT® INBOARD WING RH DE-ICE BOOT	1	1.6
3	P25S-7D5041-01	101-380001-21	FASTBOOT® OUTBOARD WING LH DE-ICE BOOT	1	6.2
4	P25S-7D5041-02	101-380001-22	FASTBOOT® OUTBOARD WING RH DE-ICE BOOT	1	6.2
5	P25S-7D5041-05	101-380001-23	FASTBOOT® HORIZONTAL STABILIZER LH/RH DE-ICE BOOT	2	2.8

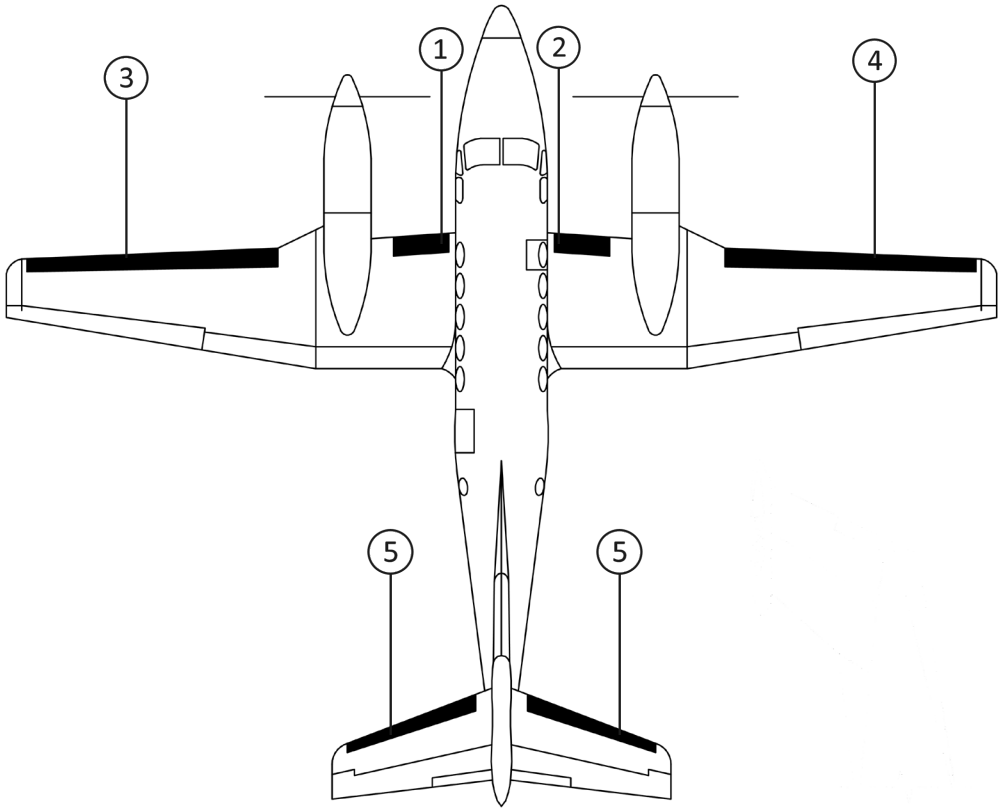

BEECHCRAFT B200GT (SUPER KING AIR)

STANDARD DE-ICE BOOTS

POSITION ID	GOODRICH PART NUMBER	AIRCRAFT OEM P/N	DESCRIPTION	QTY PER AIRCRAFT	WT
1	25S-7D5041-07	101-380001-7	INBOARD WING LH DE-ICE BOOT	1	1.6
2	25S-7D5041-08	101-380001-8	INBOARD WING RH DE-ICE BOOT	1	1.6
3	25S-7D5041-01	101-380001-1	OUTBOARD WING LH DE-ICE BOOT	1	6.2
4	25S-7D5041-02	101-380001-2	OUTBOARD WING RH DE-ICE BOOT	1	6.2
5	25S-7D5041-05	101-380001-5	HORIZONTAL STABILIZER LH/ RH DE-ICE BOOT	2	2.8

FASTboot® DE-ICE BOOTS

POSITION ID	GOODRICH PART NUMBER	AIRCRAFT OEM P/N	DESCRIPTION	QTY PER AIRCRAFT	WT
1	P25S-7D5041-07	101-380001-25	FASTBOOT® INBOARD WING LH DE-ICE BOOT	1	1.6
2	P25S-7D5041-08	101-380001-26	FASTBOOT® INBOARD WING RH DE-ICE BOOT	1	1.6
3	P25S-7D5041-01	101-380001-21	FASTBOOT® OUTBOARD WING LH DE-ICE BOOT	1	6.2
4	P25S-7D5041-02	101-380001-22	FASTBOOT® OUTBOARD WING RH DE-ICE BOOT	1	6.2
5	P25S-7D5041-05	101-380001-23	FASTBOOT® HORIZONTAL STABILIZER LH/RH DE-ICE BOOT	2	2.8

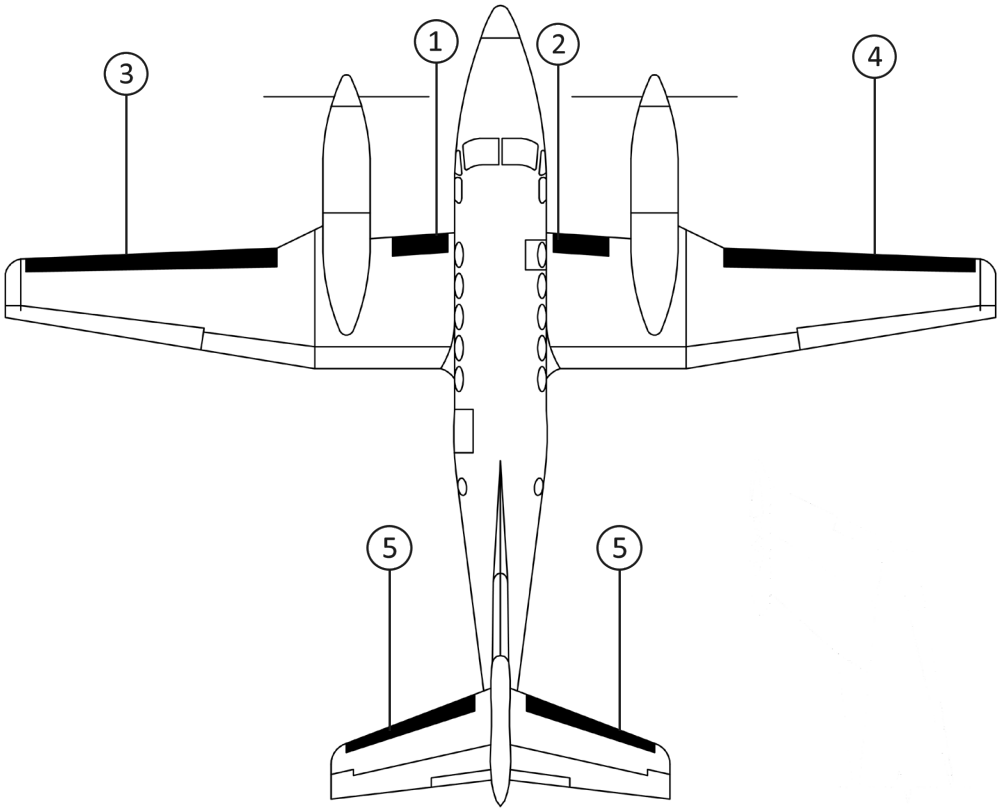

BEECHCRAFT RAISBECK CONVERSION 200 (SUPER KING AIR)

STANDARD DE-ICE BOOTS

POSITION ID	GOODRICH PART NUMBER	AIRCRAFT OEM P/N	DESCRIPTION	QTY PER AIRCRAFT	WT
1	25S-7D5041-13		INBOARD WING LH DE-ICE BOOT	1	1.5
2	25S-7D5041-14		INBOARD WING RH DE-ICE BOOT	1	1.5
3	25S-7D5041-01	101-380001-1	OUTBOARD WING LH DE-ICE BOOT	1	6.2
4	25S-7D5041-02	101-380001-2	OUTBOARD WING RH DE-ICE BOOT	1	6.2
5	25S-7D5041-05	101-380001-5	HORIZONTAL STABILIZER LH/ RH DE-ICE BOOT	2	2.8

FASTboot® DE-ICE BOOTS

POSITION ID	GOODRICH PART NUMBER	AIRCRAFT OEM P/N	DESCRIPTION	QTY PER AIRCRAFT	WT
3	P25S-7D5041-01	101-380001-21	FASTBOOT® OUTBOARD WING LH DE-ICE BOOT	1	6.2
4	P25S-7D5041-02	101-380001-22	FASTBOOT® OUTBOARD WING RH DE-ICE BOOT	1	6.2
5	P25S-7D5041-05	101-380001-23	FASTBOOT® HORIZONTAL STABILIZER LH/RH DE-ICE BOOT	1	2.8

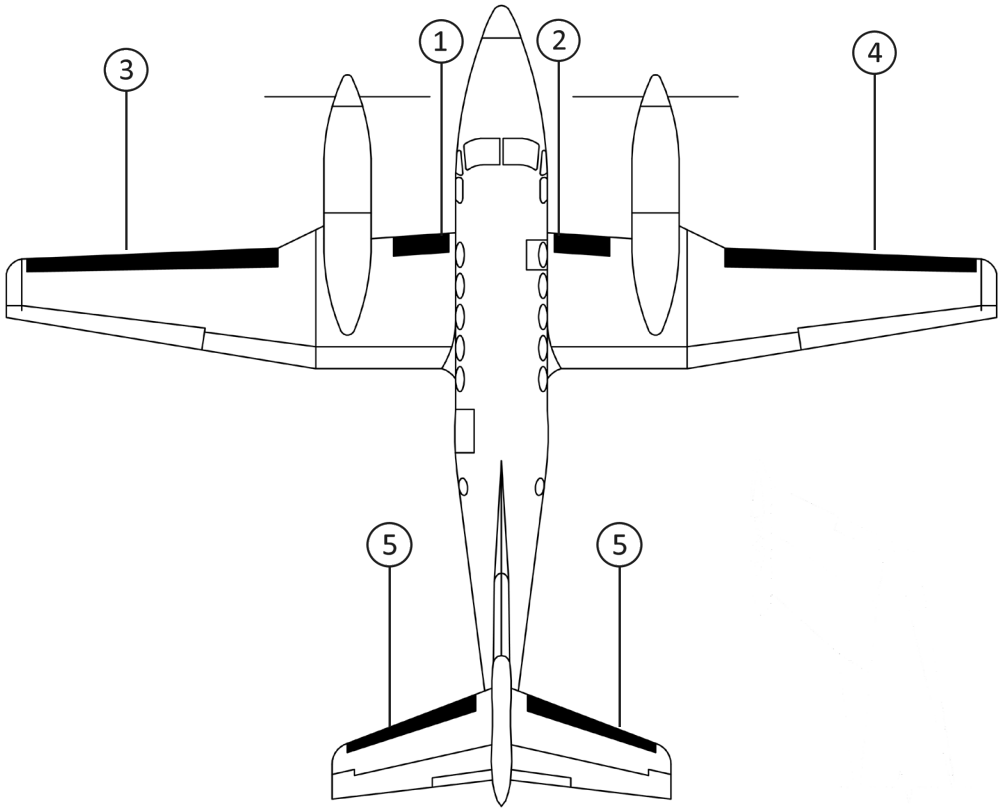

BEECHCRAFT RAISBECK CONVERSION 200C (SUPER KING AIR)

STANDARD DE-ICE BOOTS

POSITION ID	GOODRICH PART NUMBER	AIRCRAFT OEM P/N	DESCRIPTION	QTY PER AIRCRAFT	WT
1	25S-7D5041-13		INBOARD WING LH DE-ICE BOOT	1	1.5
2	25S-7D5041-14		INBOARD WING RH DE-ICE BOOT	1	1.5
3	25S-7D5041-01	101-380001-1	OUTBOARD WING LH DE-ICE BOOT	1	6.2
4	25S-7D5041-02	101-380001-2	OUTBOARD WING RH DE-ICE BOOT	1	6.2
5	25S-7D5041-05	101-380001-5	HORIZONTAL STABILIZER LH/ RH DE-ICE BOOT	2	2.8

FASTboot® DE-ICE BOOTS

POSITION ID	GOODRICH PART NUMBER	AIRCRAFT OEM P/N	DESCRIPTION	QTY PER AIRCRAFT	WT
3	P25S-7D5041-01	101-380001-21	FASTBOOT® OUTBOARD WING LH DE-ICE BOOT	1	6.2
4	P25S-7D5041-02	101-380001-22	FASTBOOT® OUTBOARD WING RH DE-ICE BOOT	1	6.2
5	P25S-7D5041-05	101-380001-23	FASTBOOT® HORIZONTAL STABILIZER LH/RH DE-ICE BOOT	1	2.8

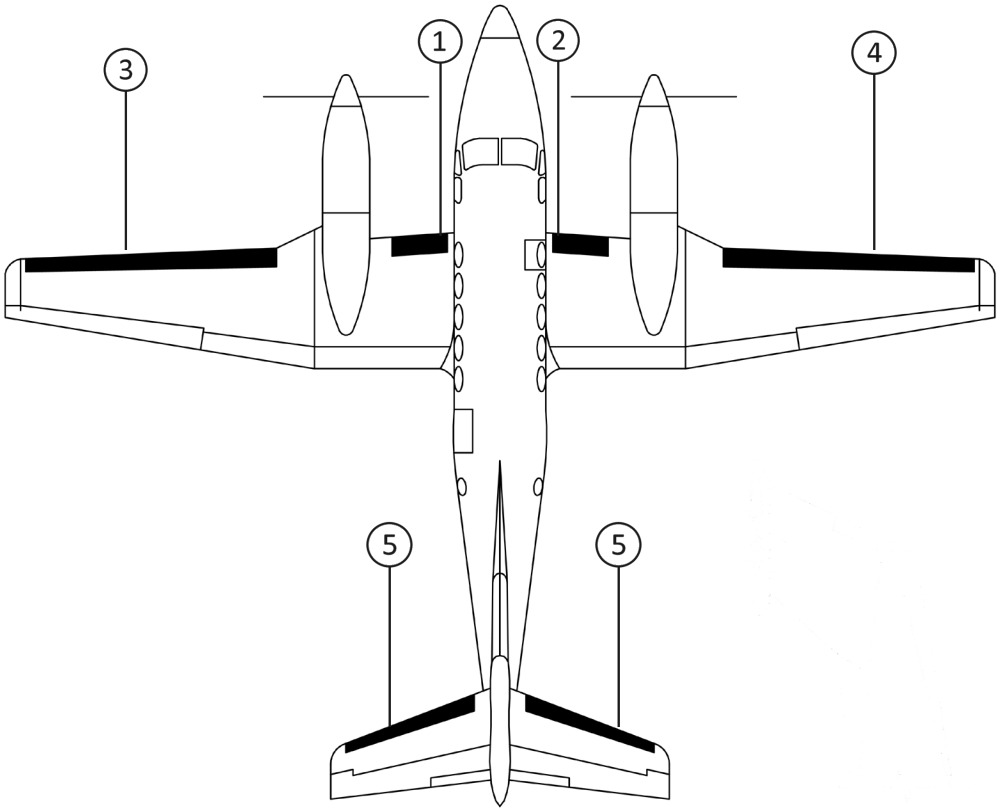

BEECHCRAFT RAISBECK CONVERSION 200CT (SUPER KING AIR)

STANDARD DE-ICE BOOTS

POSITION ID	GOODRICH PART NUMBER	AIRCRAFT OEM P/N	DESCRIPTION	QTY PER AIRCRAFT	WT
1	25S-7D5041-13		INBOARD WING LH DE-ICE BOOT	1	1.5
2	25S-7D5041-14		INBOARD WING RH DE-ICE BOOT	1	1.5
3	25S-7D5041-01	101-380001-1	OUTBOARD WING LH DE-ICE BOOT	1	6.2
4	25S-7D5041-02	101-380001-2	OUTBOARD WING RH DE-ICE BOOT	1	6.2
5	25S-7D5041-05	101-380001-5	HORIZONTAL STABILIZER LH/ RH DE-ICE BOOT	2	2.8

FASTboot® DE-ICE BOOTS

POSITION ID	GOODRICH PART NUMBER	AIRCRAFT OEM P/N	DESCRIPTION	QTY PER AIRCRAFT	WT
3	P25S-7D5041-01	101-380001-21	FASTBOOT® OUTBOARD WING LH DE-ICE BOOT	1	6.2
4	P25S-7D5041-02	101-380001-22	FASTBOOT® OUTBOARD WING RH DE-ICE BOOT	1	6.2
5	P25S-7D5041-05	101-380001-23	FASTBOOT® HORIZONTAL STABILIZER LH/RH DE-ICE BOOT	1	2.8

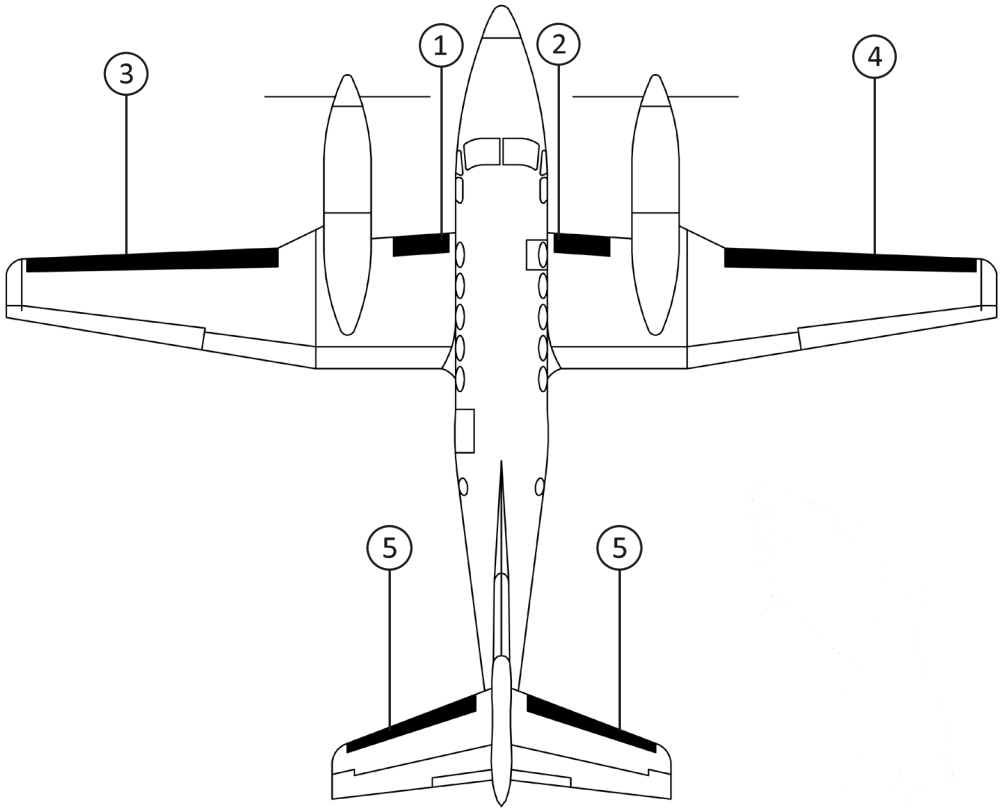

BEECHCRAFT RAISBECK CONVERSION 200T (SUPER KING AIR)

STANDARD DE-ICE BOOTS

POSITION ID	GOODRICH PART NUMBER	AIRCRAFT OEM P/N	DESCRIPTION	QTY PER AIRCRAFT	WT
1	25S-7D5041-13		INBOARD WING LH DE-ICE BOOT	1	1.5
2	25S-7D5041-14		INBOARD WING RH DE-ICE BOOT	1	1.5
3	25S-7D5041-01	101-380001-1	OUTBOARD WING LH DE-ICE BOOT	1	6.2
4	25S-7D5041-02	101-380001-2	OUTBOARD WING RH DE-ICE BOOT	1	6.2
5	25S-7D5041-05	101-380001-5	HORIZONTAL STABILIZER LH/ RH DE-ICE BOOT	2	2.8

FASTboot® DE-ICE BOOTS

POSITION ID	GOODRICH PART NUMBER	AIRCRAFT OEM P/N	DESCRIPTION	QTY PER AIRCRAFT	WT
3	P25S-7D5041-01	101-380001-21	FASTBOOT® OUTBOARD WING LH DE-ICE BOOT	1	6.2
4	P25S-7D5041-02	101-380001-22	FASTBOOT® OUTBOARD WING RH DE-ICE BOOT	1	6.2
5	P25S-7D5041-05	101-380001-23	FASTBOOT® HORIZONTAL STABILIZER LH/RH DE-ICE BOOT	1	2.8

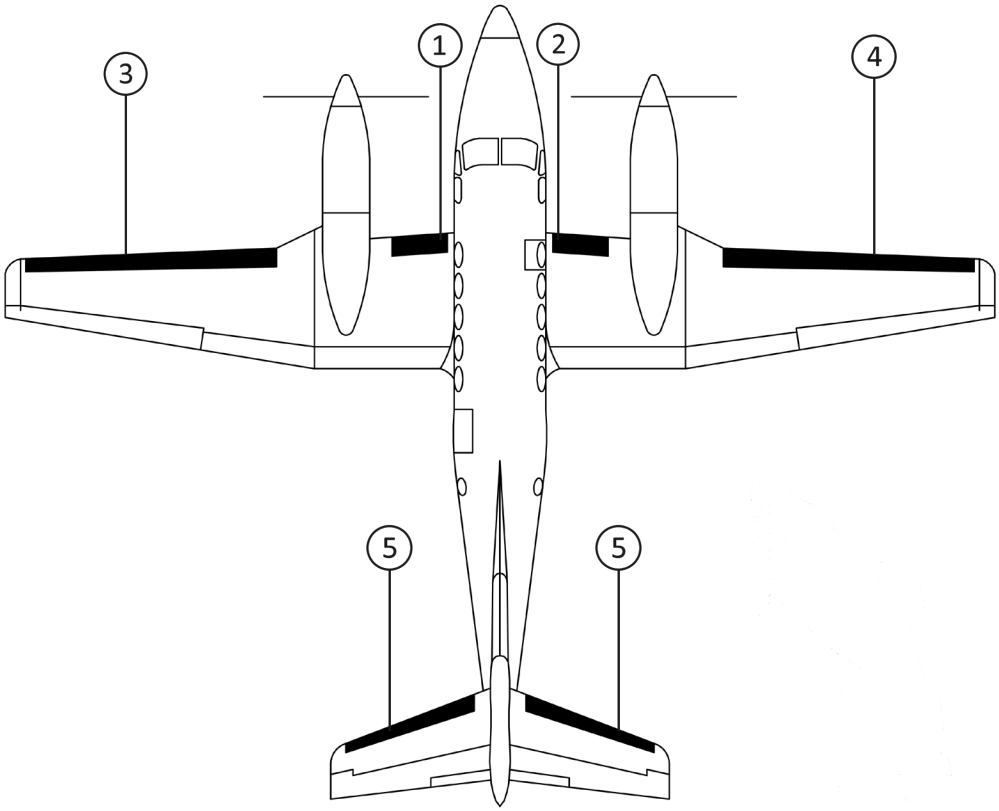

BEECHCRAFT RAISBECK CONVERSION B200C (SUPER KING AIR)

STANDARD DE-ICE BOOTS

POSITION ID	GOODRICH PART NUMBER	AIRCRAFT OEM P/N	DESCRIPTION	QTY PER AIRCRAFT	WT
1	25S-7D5041-13		INBOARD WING LH DE-ICE BOOT	1	1.5
2	25S-7D5041-14		INBOARD WING RH DE-ICE BOOT	1	1.5
3	25S-7D5041-01	101-380001-1	OUTBOARD WING LH DE-ICE BOOT	1	6.2
4	25S-7D5041-02	101-380001-2	OUTBOARD WING RH DE-ICE BOOT	1	6.2
5	25S-7D5041-05	101-380001-5	HORIZONTAL STABILIZER LH/ RH DE-ICE BOOT	2	2.8

FASTboot® DE-ICE BOOTS

POSITION ID	GOODRICH PART NUMBER	AIRCRAFT OEM P/N	DESCRIPTION	QTY PER AIRCRAFT	WT
3	P25S-7D5041-01	101-380001-21	FASTBOOT® OUTBOARD WING LH DE-ICE BOOT	1	6.2
4	P25S-7D5041-02	101-380001-22	FASTBOOT® OUTBOARD WING RH DE-ICE BOOT	1	6.2
5	P25S-7D5041-05	101-380001-23	FASTBOOT® HORIZONTAL STABILIZER LH/RH DE-ICE BOOT	1	2.8

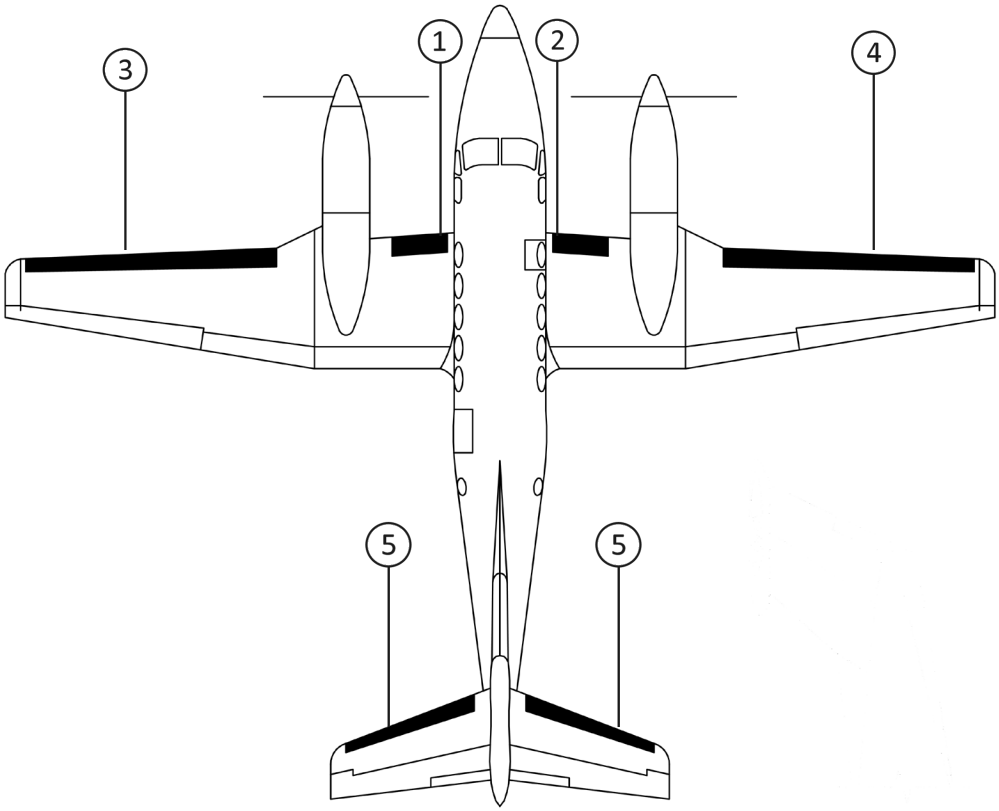

BEECHCRAFT RAISBECK CONVERSION B200CT (SUPER KING AIR)

STANDARD DE-ICE BOOTS

POSITION ID	GOODRICH PART NUMBER	AIRCRAFT OEM P/N	DESCRIPTION	QTY PER AIRCRAFT	WT
1	25S-7D5041-13		INBOARD WING LH DE-ICE BOOT	1	1.5
2	25S-7D5041-14		INBOARD WING RH DE-ICE BOOT	1	1.5
3	25S-7D5041-01	101-380001-1	OUTBOARD WING LH DE-ICE BOOT	1	6.2
4	25S-7D5041-02	101-380001-2	OUTBOARD WING RH DE-ICE BOOT	1	6.2
5	25S-7D5041-05	101-380001-5	HORIZONTAL STABILIZER LH/ RH DE-ICE BOOT	2	2.8

FASTboot® DE-ICE BOOTS

POSITION ID	GOODRICH PART NUMBER	AIRCRAFT OEM P/N	DESCRIPTION	QTY PER AIRCRAFT	WT
3	P25S-7D5041-01	101-380001-21	FASTBOOT® OUTBOARD WING LH DE-ICE BOOT	1	6.2
4	P25S-7D5041-02	101-380001-22	FASTBOOT® OUTBOARD WING RH DE-ICE BOOT	1	6.2
5	P25S-7D5041-05	101-380001-23	FASTBOOT® HORIZONTAL STABILIZER LH/RH DE-ICE BOOT	1	2.8

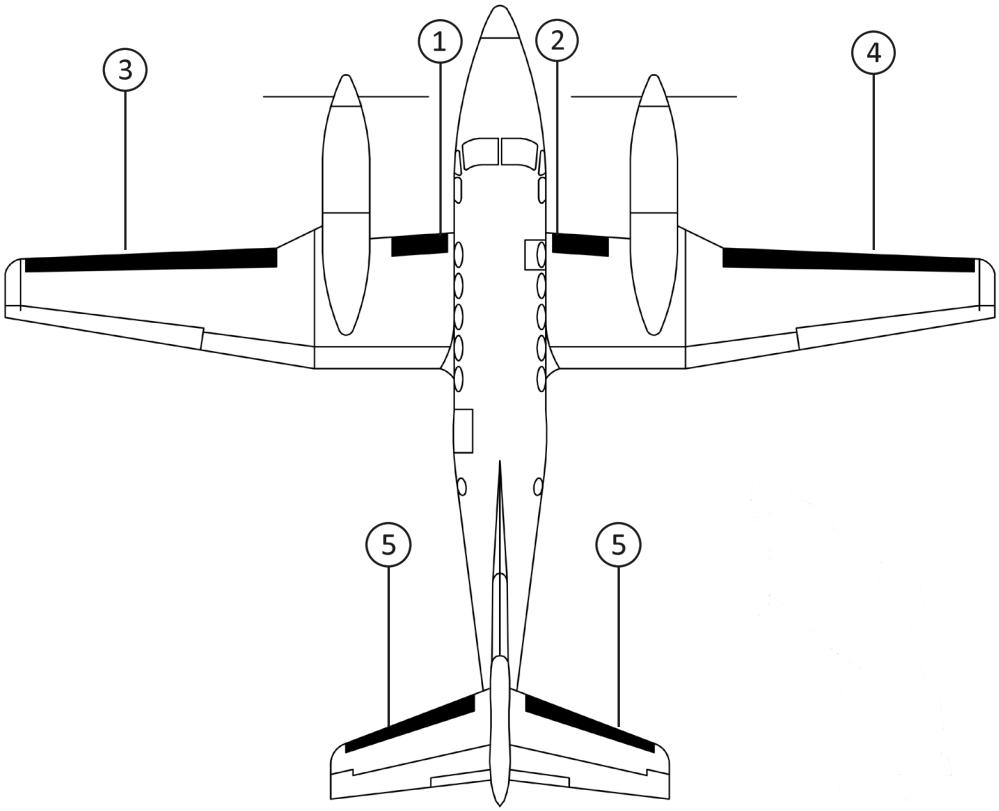

BEECHCRAFT RAISBECK CONVERSION B200T (SUPER KING AIR)

STANDARD DE-ICE BOOTS

POSITION ID	GOODRICH PART NUMBER	AIRCRAFT OEM P/N	DESCRIPTION	QTY PER AIRCRAFT	WT
1	25S-7D5041-13		INBOARD WING LH DE-ICE BOOT	1	1.5
2	25S-7D5041-14		INBOARD WING RH DE-ICE BOOT	1	1.5
3	25S-7D5041-01	101-380001-1	OUTBOARD WING LH DE-ICE BOOT	1	6.2
4	25S-7D5041-02	101-380001-2	OUTBOARD WING RH DE-ICE BOOT	1	6.2
5	25S-7D5041-05	101-380001-5	HORIZONTAL STABILIZER LH/ RH DE-ICE BOOT	2	2.8

FASTboot® DE-ICE BOOTS

POSITION ID	GOODRICH PART NUMBER	AIRCRAFT OEM P/N	DESCRIPTION	QTY PER AIRCRAFT	WT
3	P25S-7D5041-01	101-380001-21	FASTBOOT® OUTBOARD WING LH DE-ICE BOOT	1	6.2
4	P25S-7D5041-02	101-380001-22	FASTBOOT® OUTBOARD WING RH DE-ICE BOOT	1	6.2
5	P25S-7D5041-05	101-380001-23	FASTBOOT® HORIZONTAL STABILIZER LH/RH DE-ICE BOOT	1	2.8

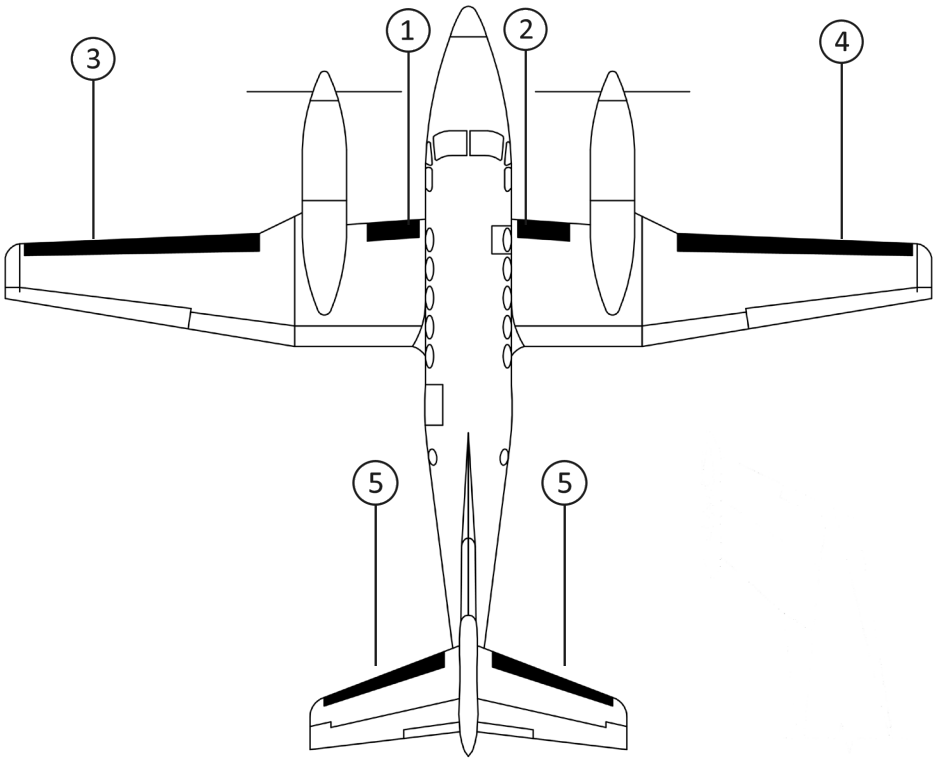

BEECHCRAFT 300 (SUPER KING AIR)

STANDARD DE-ICE BOOTS

POSITION ID	GOODRICH PART NUMBER	AIRCRAFT OEM P/N	DESCRIPTION	QTY PER AIRCRAFT	WT
1	25S-7D5041-09	101-380001-11	INBOARD WING LH DE-ICE BOOT	1	1.3
2	25S-7D5041-10	101-380001-12	INBOARD WING RH DE-ICE BOOT	1	1.3
3	25S-7D5041-11	101-380001-13	OUTBOARD WING LH DE-ICE BOOT	1	6.2
4	25S-7D5041-12	101-380001-14	OUTBOARD WING RH DE-ICE BOOT	1	6.2
5	25S-7D5064-17	101-380001-9	HORIZONTAL STABILIZER LH DE-ICE BOOT	1	3.6
6	25S-7D5064-18	101-380001-10	HORIZONTAL STABILIZER RH DE-ICE BOOT	1	3.6

FASTboot® DE-ICE BOOTS

POSITION ID	GOODRICH PART NUMBER	AIRCRAFT OEM P/N	DESCRIPTION	QTY PER AIRCRAFT	WT
1	P25S-7D5041-09	101-380001-29	FASTBOOT® INBOARD WING LH DE-ICE BOOT	1	1.3
2	P25S-7D5041-10	101-380001-30	FASTBOOT® INBOARD WING RH DE-ICE BOOT	1	1.3
3	P25S-7D5041-11		FASTBOOT® OUTBOARD WING LH DE-ICE BOOT	1	6.2
4	P25S-7D5041-12		FASTBOOT® OUTBOARD WING RH DE-ICE BOOT	1	6.2
5	P25S-7D5064-17	101-380001-27	FASTBOOT® HORIZONTAL STABILIZER LH DE-ICE BOOT	1	3.6
6	P25S-7D5064-18	101-380001-28	FASTBOOT® HORIZONTAL STABILIZER RH DE-ICE BOOT	1	3.6

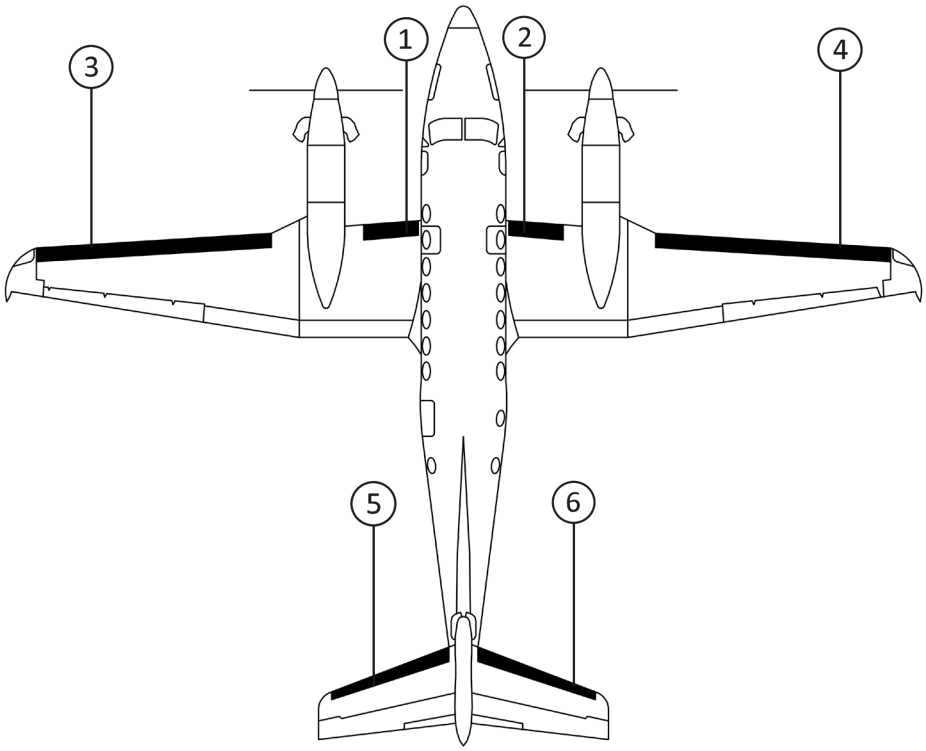

BEECHCRAFT 300LW (SUPER KING AIR)

STANDARD DE-ICE BOOTS

POSITION ID	GOODRICH PART NUMBER	AIRCRAFT OEM P/N	DESCRIPTION	QTY PER AIRCRAFT	WT
1	25S-7D5041-09	101-380001-11	INBOARD WING LH DE-ICE BOOT	1	1.3
2	25S-7D5041-10	101-380001-12	INBOARD WING RH DE-ICE BOOT	1	1.3
3	25S-7D5041-11	101-380001-13	OUTBOARD WING LH DE-ICE BOOT	1	6.2
4	25S-7D5041-12	101-380001-14	OUTBOARD WING RH DE-ICE BOOT	1	6.2
5	25S-7D5064-17	101-380001-9	HORIZONTAL STABILIZER LH DE-ICE BOOT	1	3.6
6	25S-7D5064-18	101-380001-10	HORIZONTAL STABILIZER RH DE-ICE BOOT	1	3.6

FASTboot® DE-ICE BOOTS

POSITION ID	GOODRICH PART NUMBER	AIRCRAFT OEM P/N	DESCRIPTION	QTY PER AIRCRAFT	WT
1	P25S-7D5041-09	101-380001-29	FASTBOOT® INBOARD WING LH DE-ICE BOOT	1	1.3
2	P25S-7D5041-10	101-380001-30	FASTBOOT® INBOARD WING RH DE-ICE BOOT	1	1.3
3	P25S-7D5041-11		FASTBOOT® OUTBOARD WING LH DE-ICE BOOT	1	6.2
4	P25S-7D5041-12		FASTBOOT® OUTBOARD WING RH DE-ICE BOOT	1	6.2
5	P25S-7D5064-17	101-380001-27	FASTBOOT® HORIZONTAL STABILIZER LH DE-ICE BOOT	1	3.6
6	P25S-7D5064-18	101-380001-28	FASTBOOT® HORIZONTAL STABILIZER RH DE-ICE BOOT	1	3.6

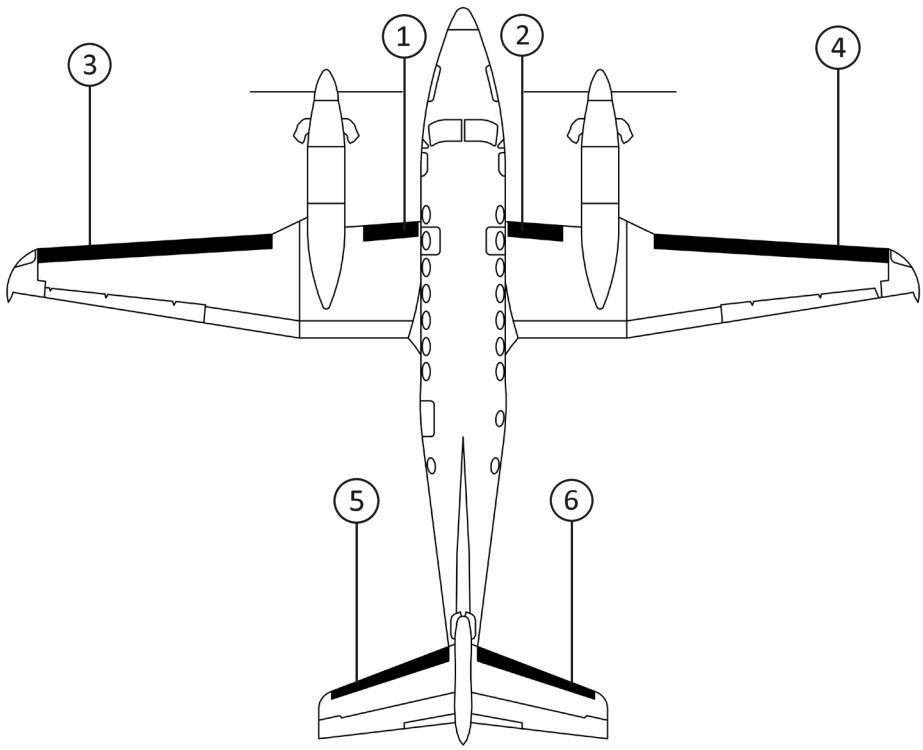

BEECHCRAFT B300 (SUPER KING AIR)

STANDARD DE-ICE BOOTS

POSITION ID	GOODRICH PART NUMBER	AIRCRAFT OEM P/N	DESCRIPTION	QTY PER AIRCRAFT	WT
1	25S-7D5041-09	101-380001-11	INBOARD WING LH DE-ICE BOOT	1	1.3
2	25S-7D5041-10	101-380001-12	INBOARD WING RH DE-ICE BOOT	1	1.3
3	25S-7D5041-17	101-380001-19	OUTBOARD WING LH DE-ICE BOOT	1	6.4
4	25S-7D5041-18	101-380001-20	OUTBOARD WING RH DE-ICE BOOT	1	6.4
5	25S-7D5064-17	101-380001-9	HORIZONTAL STABILIZER LH DE-ICE BOOT	1	3.6
6	25S-7D5064-18	101-380001-10	HORIZONTAL STABILIZER RH DE-ICE BOOT	1	3.6

FASTboot® DE-ICE BOOTS

POSITION ID	GOODRICH PART NUMBER	AIRCRAFT OEM P/N	DESCRIPTION	QTY PER AIRCRAFT	WT
1	P25S-7D5041-09	101-380001-29	FASTBOOT® INBOARD WING LH DE-ICE BOOT	1	1.3
2	P25S-7D5041-10	101-380001-30	FASTBOOT® INBOARD WING RH DE-ICE BOOT	1	1.3
3	P25S-7D5041-17	101-380001-31	FASTBOOT® OUTBOARD WING LH DE-ICE BOOT	1	6.4
4	P25S-7D5041-18	101-380001-32	FASTBOOT® OUTBOARD WING RH DE-ICE BOOT	1	6.4
5	P25S-7D5064-17	101-380001-27	FASTBOOT® HORIZONTAL STABILIZER LH DE-ICE BOOT	1	3.6
6	P25S-7D5064-18	101-380001-28	FASTBOOT® HORIZONTAL STABILIZER RH DE-ICE BOOT	1	3.6

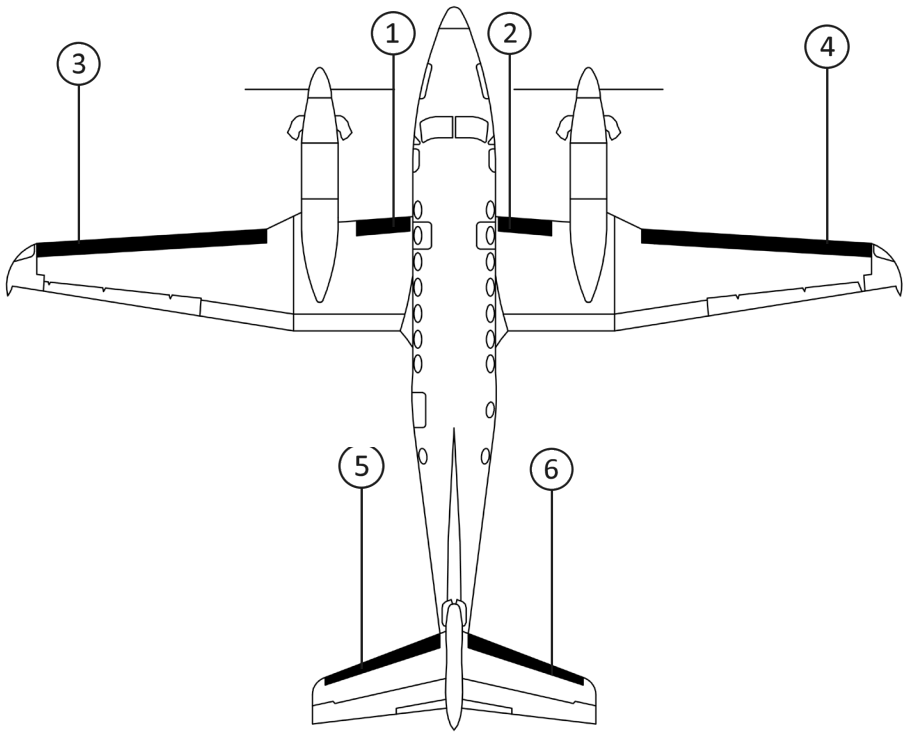

BEECHCRAFT B300C (SUPER KING AIR)

STANDARD DE-ICE BOOTS

POSITION ID	GOODRICH PART NUMBER	AIRCRAFT OEM P/N	DESCRIPTION	QTY PER AIRCRAFT	WT
1	25S-7D5041-09	101-380001-11	INBOARD WING LH DE-ICE BOOT	1	1.3
2	25S-7D5041-10	101-380001-12	INBOARD WING RH DE-ICE BOOT	1	1.3
3	25S-7D5041-17	101-380001-19	OUTBOARD WING LH DE-ICE BOOT	1	6.4
4	25S-7D5041-18	101-380001-20	OUTBOARD WING RH DE-ICE BOOT	1	6.4
5	25S-7D5064-17	101-380001-9	HORIZONTAL STABILIZER LH DE-ICE BOOT	1	3.6
6	25S-7D5064-18	101-380001-10	HORIZONTAL STABILIZER RH DE-ICE BOOT	1	3.6

FASTboot® DE-ICE BOOTS

POSITION ID	GOODRICH PART NUMBER	AIRCRAFT OEM P/N	DESCRIPTION	QTY PER AIRCRAFT	WT
1	P25S-7D5041-09	101-380001-29	FASTBOOT® INBOARD WING LH DE-ICE BOOT	1	1.3
2	P25S-7D5041-10	101-380001-30	FASTBOOT® INBOARD WING RH DE-ICE BOOT	1	1.3
3	P25S-7D5041-17	101-380001-31	FASTBOOT® OUTBOARD WING LH DE-ICE BOOT	1	6.4
4	P25S-7D5041-18	101-380001-32	FASTBOOT® OUTBOARD WING RH DE-ICE BOOT	1	6.4
5	P25S-7D5064-17	101-380001-27	FASTBOOT® HORIZONTAL STABILIZER LH DE-ICE BOOT	1	3.6
6	P25S-7D5064-18	101-380001-28	FASTBOOT® HORIZONTAL STABILIZER RH DE-ICE BOOT	1	3.6

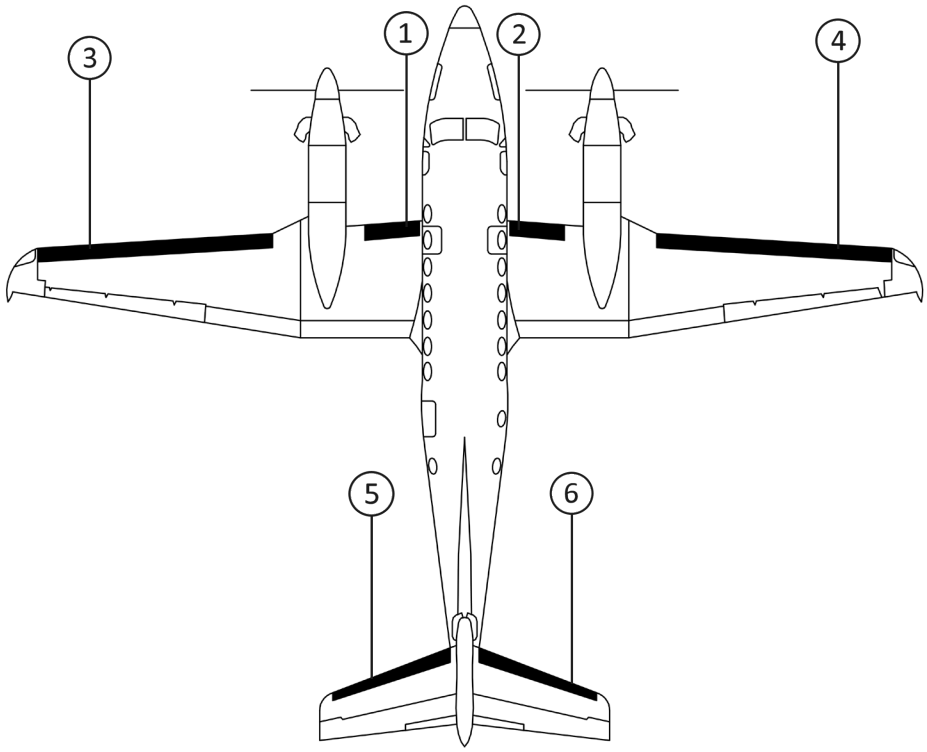

BEECHCRAFT 350 (SUPER KING AIR)

STANDARD DE-ICE BOOTS

POSITION ID	GOODRICH PART NUMBER	AIRCRAFT OEM P/N	DESCRIPTION	QTY PER AIRCRAFT	WT
1	25S-7D5041-09	101-380001-11	INBOARD WING LH DE-ICE BOOT	1	1.3
2	25S-7D5041-10	101-380001-12	INBOARD WING RH DE-ICE BOOT	1	1.3
3	25S-7D5041-17	101-380001-19	OUTBOARD WING LH DE-ICE BOOT	1	6.4
4	25S-7D5041-18	101-380001-20	OUTBOARD WING RH DE-ICE BOOT	1	6.4
5	25S-7D5064-17	101-380001-9	HORIZONTAL STABILIZER LH DE-ICE BOOT	1	3.6
6	25S-7D5064-18	101-380001-10	HORIZONTAL STABILIZER RH DE-ICE BOOT	1	3.6

FASTboot® DE-ICE BOOTS

POSITION ID	GOODRICH PART NUMBER	AIRCRAFT OEM P/N	DESCRIPTION	QTY PER AIRCRAFT	WT
1	P25S-7D5041-09	101-380001-29	FASTBOOT® INBOARD WING LH DE-ICE BOOT	1	1.3
2	P25S-7D5041-10	101-380001-30	FASTBOOT® INBOARD WING RH DE-ICE BOOT	1	1.3
3	P25S-7D5041-17	101-380001-31	FASTBOOT® OUTBOARD WING LH DE-ICE BOOT	1	6.4
4	P25S-7D5041-18	101-380001-32	FASTBOOT® OUTBOARD WING RH DE-ICE BOOT	1	6.4
5	P25S-7D5064-17	101-380001-27	FASTBOOT® HORIZONTAL STABILIZER LH DE-ICE BOOT	1	3.6
6	P25S-7D5064-18	101-380001-28	FASTBOOT® HORIZONTAL STABILIZER RH DE-ICE BOOT	1	3.6

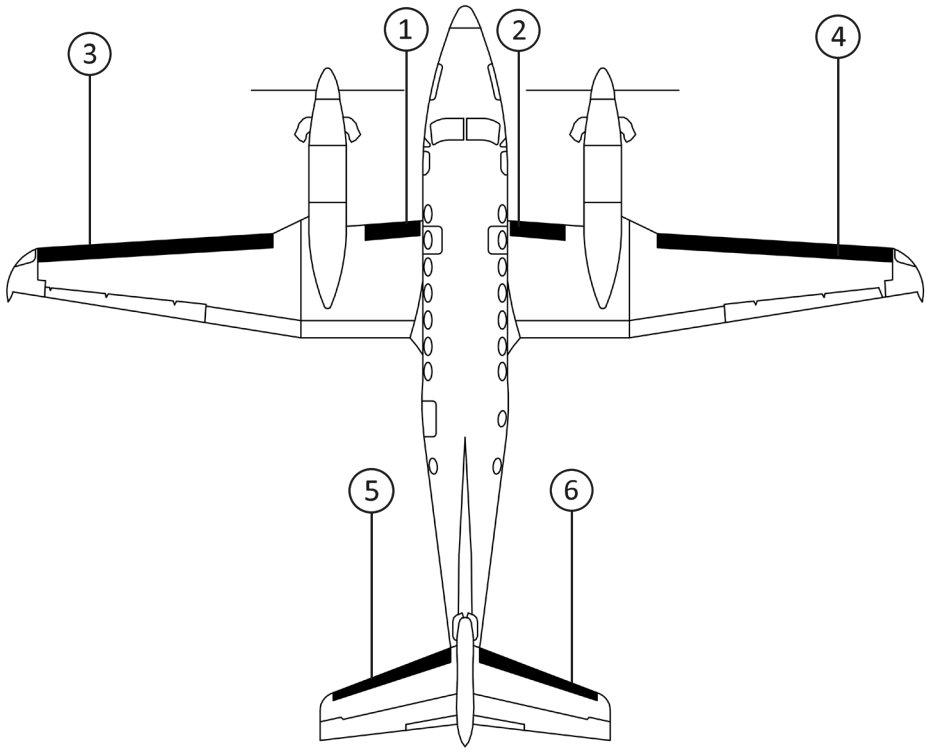

BEECHCRAFT B350 (SUPER KING AIR)

STANDARD DE-ICE BOOTS

POSITION ID	GOODRICH PART NUMBER	AIRCRAFT OEM P/N	DESCRIPTION	QTY PER AIRCRAFT	WT
1	25S-7D5041-09	101-380001-11	INBOARD WING LH DE-ICE BOOT	1	1.3
2	25S-7D5041-10	101-380001-12	INBOARD WING RH DE-ICE BOOT	1	1.3
3	25S-7D5041-17	101-380001-19	OUTBOARD WING LH DE-ICE BOOT	1	6.4
4	25S-7D5041-18	101-380001-20	OUTBOARD WING RH DE-ICE BOOT	1	6.4
5	25S-7D5064-17	101-380001-9	HORIZONTAL STABILIZER LH DE-ICE BOOT	1	3.6
6	25S-7D5064-18	101-380001-10	HORIZONTAL STABILIZER RH DE-ICE BOOT	1	3.6

FASTboot® DE-ICE BOOTS

POSITION ID	GOODRICH PART NUMBER	AIRCRAFT OEM P/N	DESCRIPTION	QTY PER AIRCRAFT	WT
1	P25S-7D5041-09	101-380001-29	FASTBOOT® INBOARD WING LH DE-ICE BOOT	1	1.3
2	P25S-7D5041-10	101-380001-30	FASTBOOT® INBOARD WING RH DE-ICE BOOT	1	1.3
3	P25S-7D5041-17	101-380001-31	FASTBOOT® OUTBOARD WING LH DE-ICE BOOT	1	6.4
4	P25S-7D5041-18	101-380001-32	FASTBOOT® OUTBOARD WING RH DE-ICE BOOT	1	6.4
5	P25S-7D5064-17	101-380001-27	FASTBOOT® HORIZONTAL STABILIZER LH DE-ICE BOOT	1	3.6
6	P25S-7D5064-18	101-380001-28	FASTBOOT® HORIZONTAL STABILIZER RH DE-ICE BOOT	1	3.6

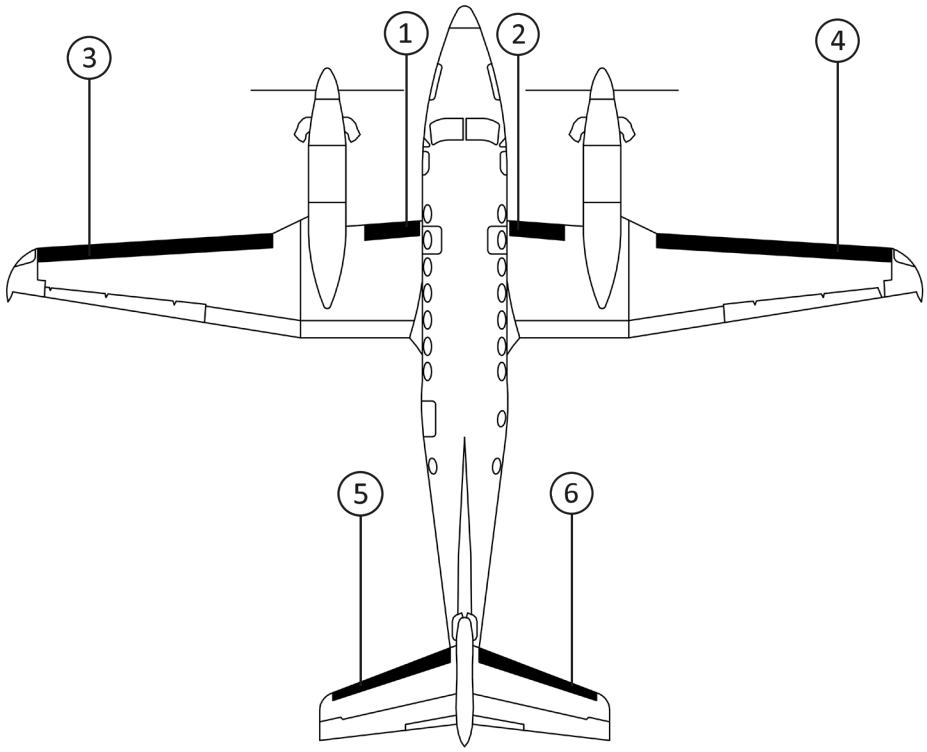

BEECHCRAFT 1900 (AIRLINER)

STANDARD DE-ICE BOOTS

POSITION ID	GOODRICH PART NUMBER	AIRCRAFT OEM P/N	DESCRIPTION	QTY PER AIRCRAFT	WT
1	29S-7D5137-01	114-380036-9	FUSELAGE-NACELLE LH DE-ICE BOOT	1	2.5
2	29S-7D5137-02	114-380036-11	FUSELAGE-NACELLE RH DE-ICE BOOT	1	2.1
3	29S-7D5137-03	114-380036-5	NACELLE-BREAK LH DE-ICE BOOT	1	1.1
4	29S-7D5137-04	114-380036-7	NACELLE-BREAK RH DE-ICE BOOT	1	1.1
5	29S-7D5137-13	114-380036-21	BREAK-TIP LH DE-ICE BOOT	1	7.0
6	29S-7D5137-06	114-380036-3	BREAK-TIP RH DE-ICE BOOT	1	7.0
7	29S-7D5137-07	114-380036-13	HORIZONTAL STABILIZER LH DE-ICE BOOT	1	3.2
8	29S-7D5137-08	114-380036-15	HORIZONTAL STABILIZER RH DE-ICE BOOT	1	3.2
9	29S-7D5137-15	114-380036-23	STABILON LH DE-ICE BOOT	1	1.1
10	29S-7D5137-16	114-380036-25	STABILON RH DE-ICE BOOT	1	1.1

OPTIONAL STANDARD DE-ICE BOOTS

POSITION ID	GOODRICH PART NUMBER	AIRCRAFT OEM P/N	DESCRIPTION	QTY PER AIRCRAFT	WT
1	29S-7D5137-59	114-380036-63	FUSELAGE-NACELLE LH (ESTANE®) DE-ICE BOOT	1	2.5
2	29S-7D5137-60	114-380036-65	FUSELAGE-NACELLE RH (ESTANE®) DE-ICE BOOT	1	2.1
5	29S-7D5137-57	114-380036-39	BREAK-TIP LH (ESTANE®) DE-ICE BOOT	1	7.0
6	29S-7D5137-58	114-380036-41	BREAK-TIP RH (ESTANE®) DE-ICE BOOT	1	7.0

*ESTANE® DE-ICERS HAVE A SURFACE PLY RESISTANT TO DIESTER TYPE ENGINE OIL

FASTboot® DE-ICE BOOTS

POSITION ID	GOODRICH PART NUMBER	AIRCRAFT OEM P/N	DESCRIPTION	QTY PER AIRCRAFT	WT
1	P29S-7D5137-01	114-380067-9	FASTBOOT® FUSELAGE-NACELLE LH DE-ICE BOOT	1	2.5
2	P29S-7D5137-02	114-380067-11	FASTBOOT® FUSELAGE-NACELLE RH DE-ICE BOOT	1	2.1
3	P29S-7D5137-03	114-380067-5	FASTBOOT® NACELLE-BREAK LH DE-ICE BOOT	1	1.1
4	P29S-7D5137-04	114-380067-7	FASTBOOT® NACELLE-BREAK RH DE-ICE BOOT	1	1.1
5	P29S-7D5137-13	114-380067-21	FASTBOOT® BREAK-TIP LH DE-ICE BOOT	1	7.0
6	P29S-7D5137-06	114-380067-3	FASTBOOT® BREAK-TIP RH DE-ICE BOOT	1	7.0
7	P29S-7D5137-07	114-380067-13	FASTBOOT® HORIZONTAL STABILIZER LH DE-ICE BOOT	1	3.2
8	P29S-7D5137-08	114-380067-15	FASTBOOT® HORIZONTAL STABILIZER RH DE-ICE BOOT	1	3.2
9	P29S-7D5137-15	114-380067-23	FASTBOOT® STABILON LH DE-ICE BOOT	1	1.1
10	P29S-7D5137-16	114-380067-25	FASTBOOT® STABILON RH DE-ICE BOOT	1	1.1

(CONTINUED ON PAGE 130)

BEECHCRAFT 1900 (AIRLINER)

FASTboot® DE-ICE BOOTS

POSITION ID	GOODRICH PART NUMBER	AIRCRAFT OEM P/N	DESCRIPTION	QTY PER AIRCRAFT	WT
1	P29S-7D5137-59	114-380067-63	FASTBOOT® FUSELAGE-NACELLE LH (ESTANE®) DE-ICE BOOT	1	2.5
2	P29S-7D5137-60	114-380067-65	FASTBOOT® FUSELAGE-NACELLE RH (ESTANE®) DE-ICE BOOT	1	2.1
5	P29S-7D5137-57	114-380067-39	FASTBOOT® BREAK-TIP LH (ESTANE®) DE-ICE BOOT	1	7.0
6	P29S-7D5137-58	114-380067-41	FASTBOOT® BREAK-TIP RH (ESTANE®) DE-ICE BOOT	1	7.0

*ESTANE® DE-ICERS HAVE A SURFACE PLY RESISTANT TO DIESTER TYPE ENGINE OIL

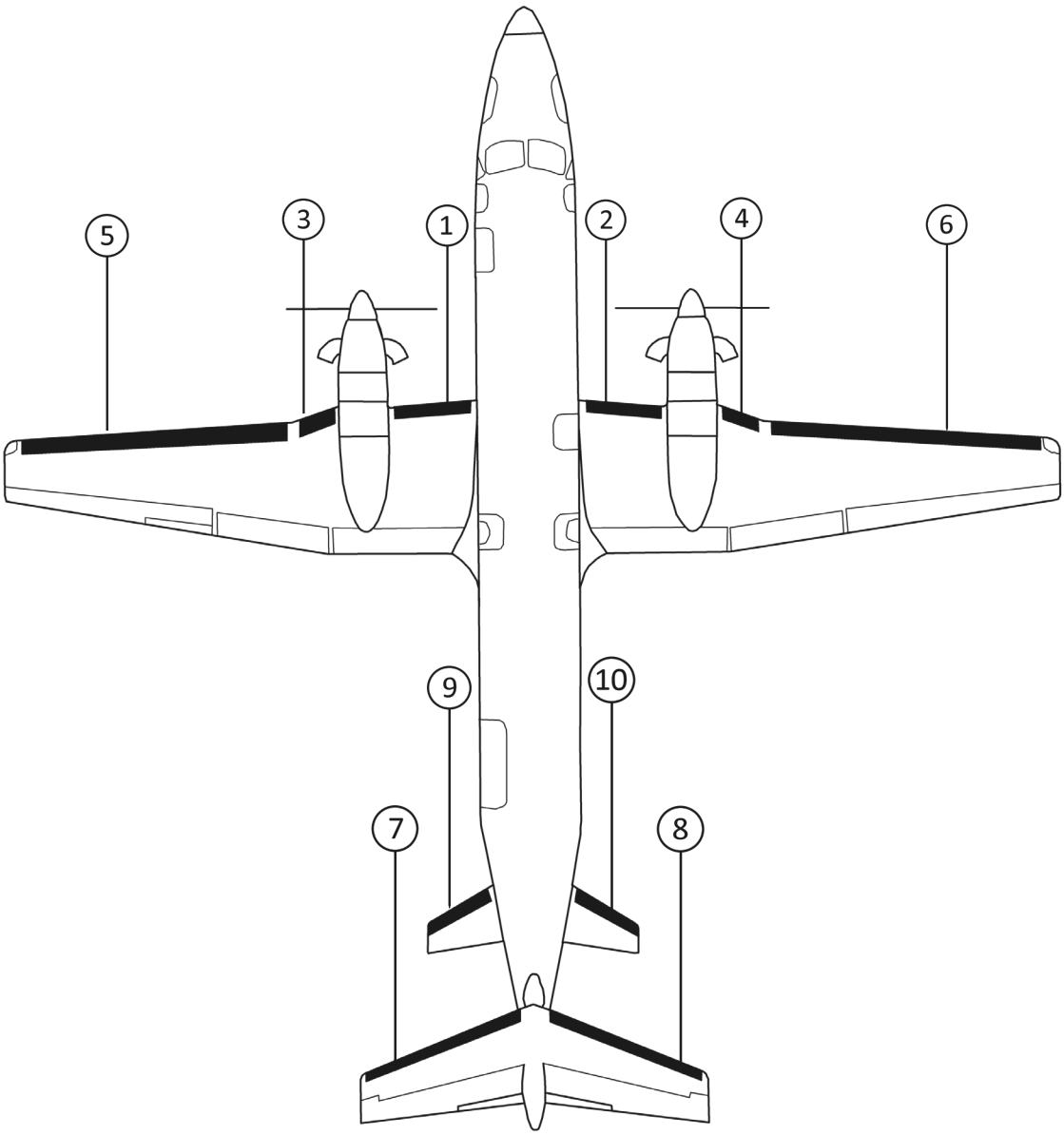

BEECHCRAFT 1900C (AIRLINER) S/N UB-1 UP

STANDARD DE-ICE BOOTS

POSITION ID	GOODRICH PART NUMBER	AIRCRAFT OEM P/N	DESCRIPTION	QTY PER AIRCRAFT	WT
1	29S-7D5137-01	114-380036-9	FUSELAGE-NACELLE LH DE-ICE BOOT	1	2.5
2	29S-7D5137-02	114-380036-11	FUSELAGE-NACELLE RH DE-ICE BOOT	1	2.1
3	29S-7D5137-03	114-380036-5	NACELLE-BREAK LH DE-ICE BOOT	1	1.1
4	29S-7D5137-04	114-380036-7	NACELLE-BREAK RH DE-ICE BOOT	1	1.1
5	29S-7D5137-13	114-380036-21	BREAK-TIP LH DE-ICE BOOT	1	7.0
6	29S-7D5137-06	114-380036-3	BREAK-TIP RH DE-ICE BOOT	1	7.0
7	29S-7D5137-07	114-380036-13	HORIZONTAL STABILIZER LH DE-ICE BOOT	1	3.2
8	29S-7D5137-08	114-380036-15	HORIZONTAL STABILIZER RH DE-ICE BOOT	1	3.2
9	29S-7D5137-15	114-380036-23	STABILON LH DE-ICE BOOT	1	1.1
10	29S-7D5137-16	114-380036-25	STABILON RH DE-ICE BOOT	1	1.1

OPTIONAL STANDARD DE-ICE BOOTS

POSITION ID	GOODRICH PART NUMBER	AIRCRAFT OEM P/N	DESCRIPTION	QTY PER AIRCRAFT	WT
1	29S-7D5137-59	114-380036-63	FUSELAGE-NACELLE LH (ESTANE®) DE-ICE BOOT	1	2.5
2	29S-7D5137-60	114-380036-65	FUSELAGE-NACELLE RH (ESTANE®) DE-ICE BOOT	1	2.1
5	29S-7D5137-57	114-380036-39	BREAK-TIP LH (ESTANE®) DE-ICE BOOT	1	7.0
6	29S-7D5137-58	114-380036-41	BREAK-TIP RH (ESTANE®) DE-ICE BOOT	1	7.0

*ESTANE® DE-ICERS HAVE A SURFACE PLY RESISTANT TO DIESTER TYPE ENGINE OIL

FASTboot® DE-ICE BOOTS

POSITION ID	GOODRICH PART NUMBER	AIRCRAFT OEM P/N	DESCRIPTION	QTY PER AIRCRAFT	WT
1	P29S-7D5137-01	114-380067-9	FASTBOOT® FUSELAGE-NACELLE LH DE-ICE BOOT	1	2.5
2	P29S-7D5137-02	114-380067-11	FASTBOOT® FUSELAGE-NACELLE RH DE-ICE BOOT	1	2.1
3	P29S-7D5137-03	114-380067-5	FASTBOOT® NACELLE-BREAK LH DE-ICE BOOT	1	1.1
4	P29S-7D5137-04	114-380067-7	FASTBOOT® NACELLE-BREAK RH DE-ICE BOOT	1	1.1
5	P29S-7D5137-13	114-380067-21	FASTBOOT® BREAK-TIP LH DE-ICE BOOT	1	7.0
6	P29S-7D5137-06	114-380067-3	FASTBOOT® BREAK-TIP RH DE-ICE BOOT	1	7.0
7	P29S-7D5137-07	114-380067-13	FASTBOOT® HORIZONTAL STABILIZER LH DE-ICE BOOT	1	3.2
8	P29S-7D5137-08	114-380067-15	FASTBOOT® HORIZONTAL STABILIZER RH DE-ICE BOOT	1	3.2
9	P29S-7D5137-15	114-380067-23	FASTBOOT® STABILON LH DE-ICE BOOT	1	1.1
10	P29S-7D5137-16	114-380067-25	FASTBOOT® STABILON RH DE-ICE BOOT	1	1.1

(CONTINUED ON PAGE 132)

BEECHCRAFT 1900C (AIRLINER) S/N UB-1 UP

FASTboot® DE-ICE BOOTS

POSITION ID	GOODRICH PART NUMBER	AIRCRAFT OEM P/N	DESCRIPTION	QTY PER AIRCRAFT	WT
1	P29S-7D5137-59	114-380067-63	FASTBOOT® FUSELAGE-NACELLE LH (ESTANE®) DE-ICE BOOT	1	2.5
2	P29S-7D5137-60	114-380067-65	FASTBOOT® FUSELAGE-NACELLE RH (ESTANE®) DE-ICE BOOT	1	2.1
5	P29S-7D5137-57	114-380067-39	FASTBOOT® BREAK-TIP LH (ESTANE®) DE-ICE BOOT	1	7.0
6	P29S-7D5137-58	114-380067-41	FASTBOOT® BREAK-TIP RH (ESTANE®) DE-ICE BOOT	1	7.0

*ESTANE® DE-ICERS HAVE A SURFACE PLY RESISTANT TO DIESTER TYPE ENGINE OIL

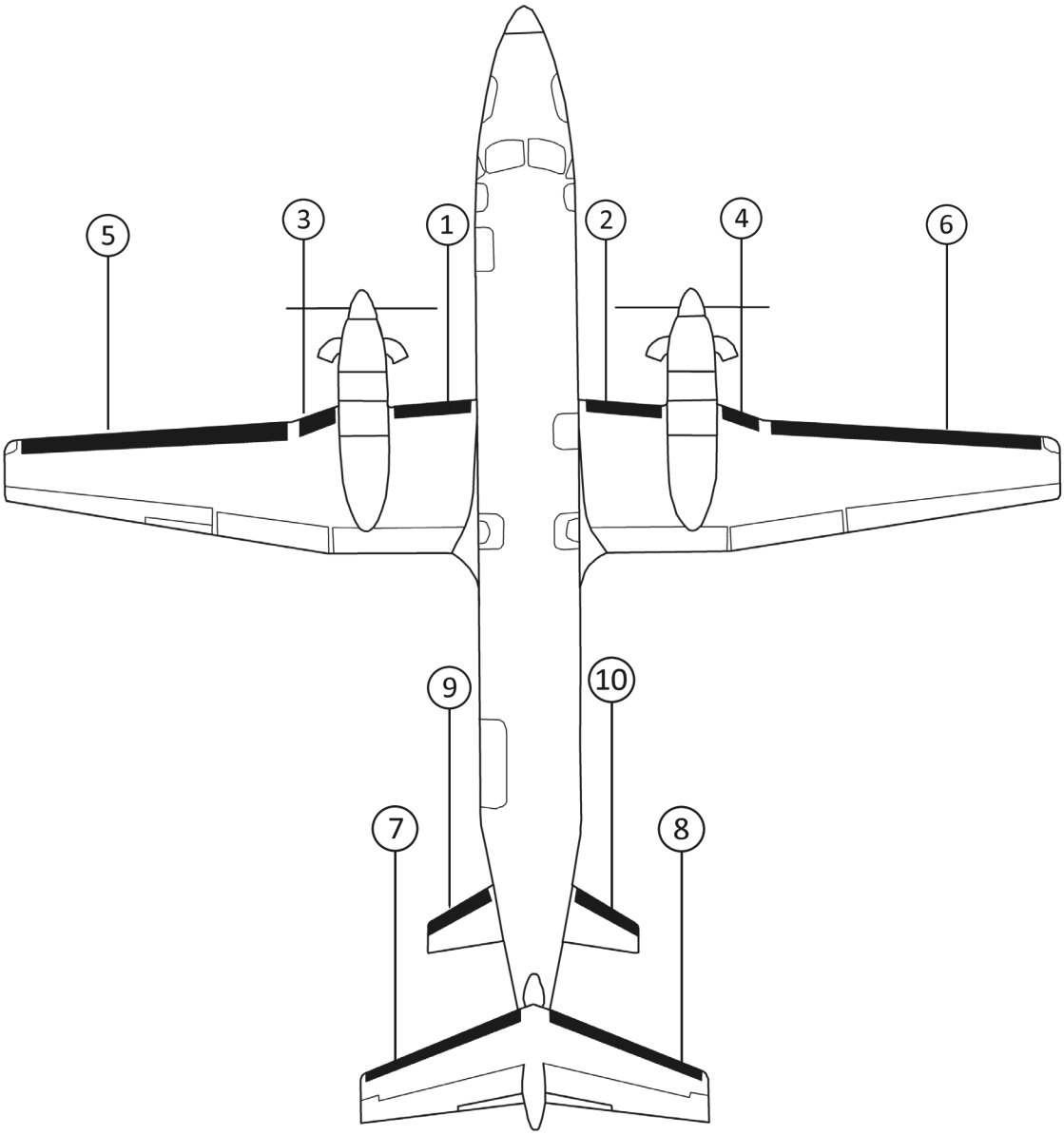

BEECHCRAFT 1900C (AIRLINER) S/N UC-1 UP

STANDARD DE-ICE BOOTS

POSITION ID	GOODRICH PART NUMBER	AIRCRAFT OEM P/N	DESCRIPTION	QTY PER AIRCRAFT	WT
1	29S-7D5137-01	114-380036-9	FUSELAGE-NACELLE LH DE-ICE BOOT	1	2.5
2	29S-7D5137-02	114-380036-11	FUSELAGE-NACELLE RH DE-ICE BOOT	1	2.1
3	29S-7D5137-17	114-380036-75	NACELLE-BREAK LH DE-ICE BOOT	1	1.1
4	29S-7D5137-18	114-380036-77	NACELLE-BREAK RH DE-ICE BOOT	1	1.1
5	29S-7D5137-19	114-380036-27	BREAK-TIP LH DE-ICE BOOT	1	7.0
5	29S-7D5137-79	114-380036-103	BREAK-TIP LH DE-ICE BOOT	1	7.0
6	29S-7D5137-20	114-380036-29	BREAK-TIP RH DE-ICE BOOT	1	7.0
7	29S-7D5137-07	114-380036-13	HORIZONTAL STABILIZER LH DE-ICE BOOT	1	3.2
8	29S-7D5137-08	114-380036-15	HORIZONTAL STABILIZER RH DE-ICE BOOT	1	3.2
9	29S-7D5137-15	114-380036-23	STABILON LH DE-ICE BOOT	1	1.1
10	29S-7D5137-16	114-380036-25	STABILON RH DE-ICE BOOT	1	1.1

OPTIONAL STANDARD DE-ICE BOOTS

POSITION ID	GOODRICH PART NUMBER	AIRCRAFT OEM P/N	DESCRIPTION	QTY PER AIRCRAFT	WT
1	29S-7D5137-59	114-380036-63	FUSELAGE-NACELLE LH (ESTANE®) DE-ICE BOOT	1	2.5
2	29S-7D5137-60	114-380036-65	FUSELAGE-NACELLE RH (ESTANE®) DE-ICE BOOT	1	2.1
3	29S-7D5137-61	114-380036-67	NACELLE-BREAK LH (ESTANE®) DE-ICE BOOT	1	1.1
4	29S-7D5137-62	114-380036-69	NACELLE-BREAK RH (ESTANE®) DE-ICE BOOT	1	1.1
5	29S-7D5137-51	114-380036-35	BREAK-TIP LH (ESTANE®) DE-ICE BOOT	1	7.0
5	29S-7D5137-67	114-380036-81	BREAK-TIP LH (ESTANE®) DE-ICE BOOT	1	7.0
6	29S-7D5137-52	114-380036-37	BREAK-TIP RH (ESTANE®) DE-ICE BOOT	1	7.0
6	29S-7D5137-68	114-380036-83	BREAK-TIP RH (ESTANE®) DE-ICE BOOT	1	7.0

*ESTANE® DE-ICERS HAVE A SURFACE PLY RESISTANT TO DIESTER TYPE ENGINE OIL

FASTboot® DE-ICE BOOTS

POSITION ID	GOODRICH PART NUMBER	AIRCRAFT OEM P/N	DESCRIPTION	QTY PER AIRCRAFT	WT
1	P29S-7D5137-01	114-380067-9	FASTBOOT® FUSELAGE-NACELLE LH DE-ICE BOOT	1	2.5
2	P29S-7D5137-02	114-380067-11	FASTBOOT® FUSELAGE-NACELLE RH DE-ICE BOOT	1	2.1
3	P29S-7D5137-17	114-380067-75	FASTBOOT® NACELLE-BREAK LH DE-ICE BOOT	1	1.1
4	P29S-7D5137-18	114-380067-77	FASTBOOT® NACELLE-BREAK RH DE-ICE BOOT	1	1.1
5	P29S-7D5137-19	114-380067-27	FASTBOOT® BREAK-TIP LH DE-ICE BOOT	1	7.0
6	P29S-7D5137-20	114-380067-29	FASTBOOT® BREAK-TIP RH DE-ICE BOOT	1	7.0
7	P29S-7D5137-07	114-380067-13	FASTBOOT® HORIZONTAL STABILIZER LH DE-ICE BOOT	1	3.2

*ESTANE® DE-ICERS HAVE A SURFACE PLY RESISTANT TO DIESTER TYPE ENGINE OIL

(CONTINUED ON PAGE 135)

BEECHCRAFT 1900C (AIRLINER) S/N UC-1 UP

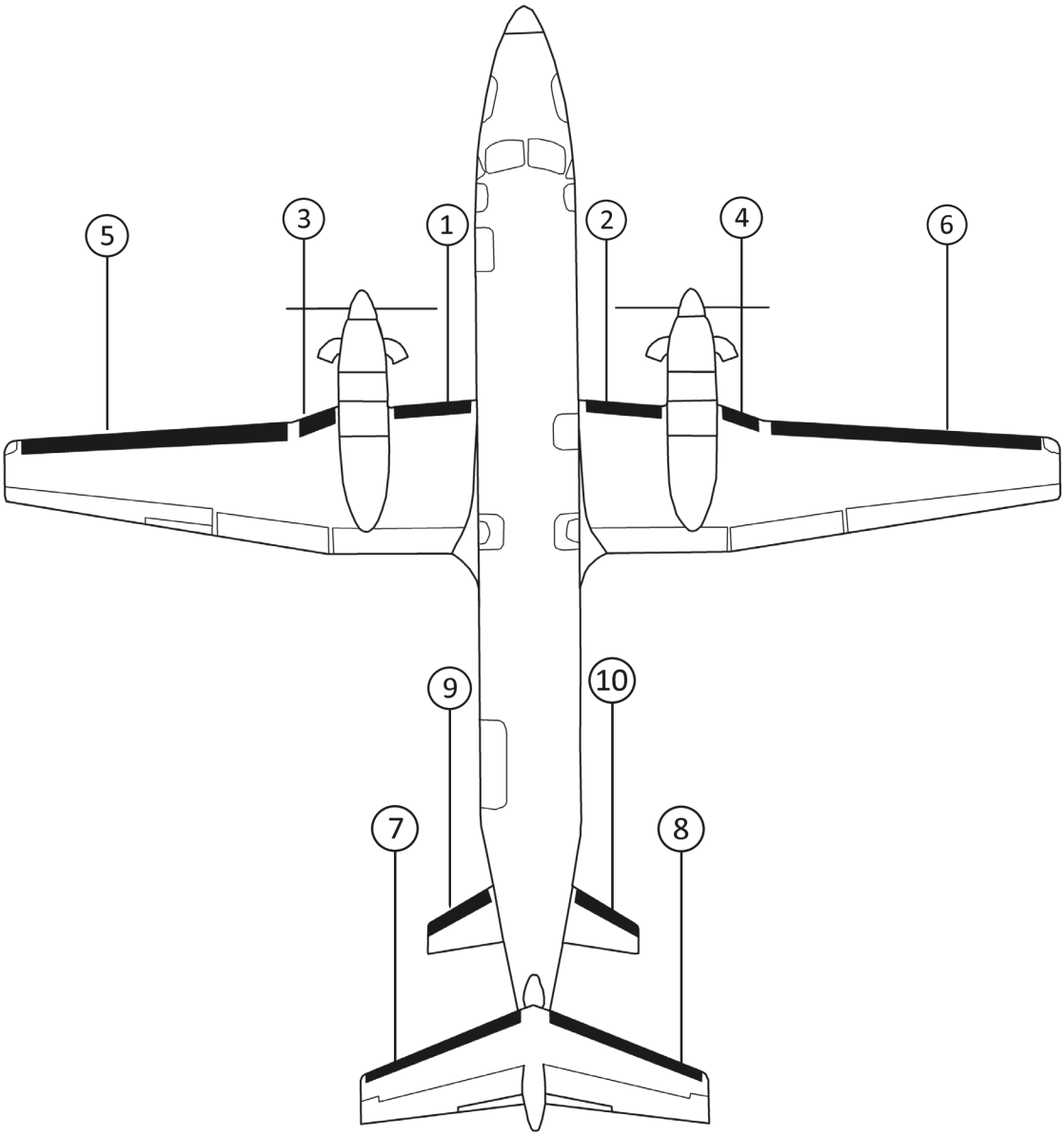

BEECHCRAFT 1900C (AIRLINER) S/N UC-1 UP

BEECHCRAFT 1900C (AIRLINER) S/N UC-1 UP

FASTboot® DE-ICE BOOTS (CONTINUED)

POSITION ID	GOODRICH PART NUMBER	AIRCRAFT OEM P/N	DESCRIPTION	QTY PER AIRCRAFT	WT
8	P29S-7D5137-08	114-380067-15	FASTBOOT® HORIZONTAL STABILIZER RH DE-ICE BOOT	1	3.2
9	P29S-7D5137-15	114-380067-23	FASTBOOT® STABILON LH DE-ICE BOOT	1	1.1
10	P29S-7D5137-16	114-380067-25	FASTBOOT® STABILON RH DE-ICE BOOT	1	1.1

OPTIONAL FASTboot® DE-ICE BOOTS

POSITION ID	GOODRICH PART NUMBER	AIRCRAFT OEM P/N	DESCRIPTION	QTY PER AIRCRAFT	WT
1	P29S-7D5137-59	114-380067-63	FASTBOOT® FUSELAGE-NACELLE LH (ESTANE®) DE-ICE BOOT	1	2.5
2	P29S-7D5137-60	114-380067-65	FASTBOOT® FUSELAGE-NACELLE RH (ESTANE®) DE-ICE BOOT	1	2.1
3	P29S-7D5137-61		FASTBOOT® NACELLE-BREAK LH (ESTANE®) DE-ICE BOOT	1	1.1
4	P29S-7D5137-62		FASTBOOT® NACELLE-BREAK RH (ESTANE®) DE-ICE BOOT	1	1.1
5	P29S-7D5137-51	114-380067-35	FASTBOOT® BREAK-TIP LH (ESTANE®) DE-ICE BOOT	1	7.0
5	P29S-7D5137-67	114-380067-81	FASTBOOT® BREAK-TIP LH (ESTANE®) DE-ICE BOOT	1	7.0
6	P29S-7D5137-52	114-380067-37	FASTBOOT® BREAK-TIP RH (ESTANE®) DE-ICE BOOT	1	7.0
6	P29S-7D5137-68	114-380067-83	FASTBOOT® BREAK-TIP RH (ESTANE®) DE-ICE BOOT	1	7.0

*ESTANE® DE-ICERS HAVE A SURFACE PLY RESISTANT TO DIESTER TYPE ENGINE OIL

BEECHCRAFT 1900C (AIRLINER) S/N UC-1 UP

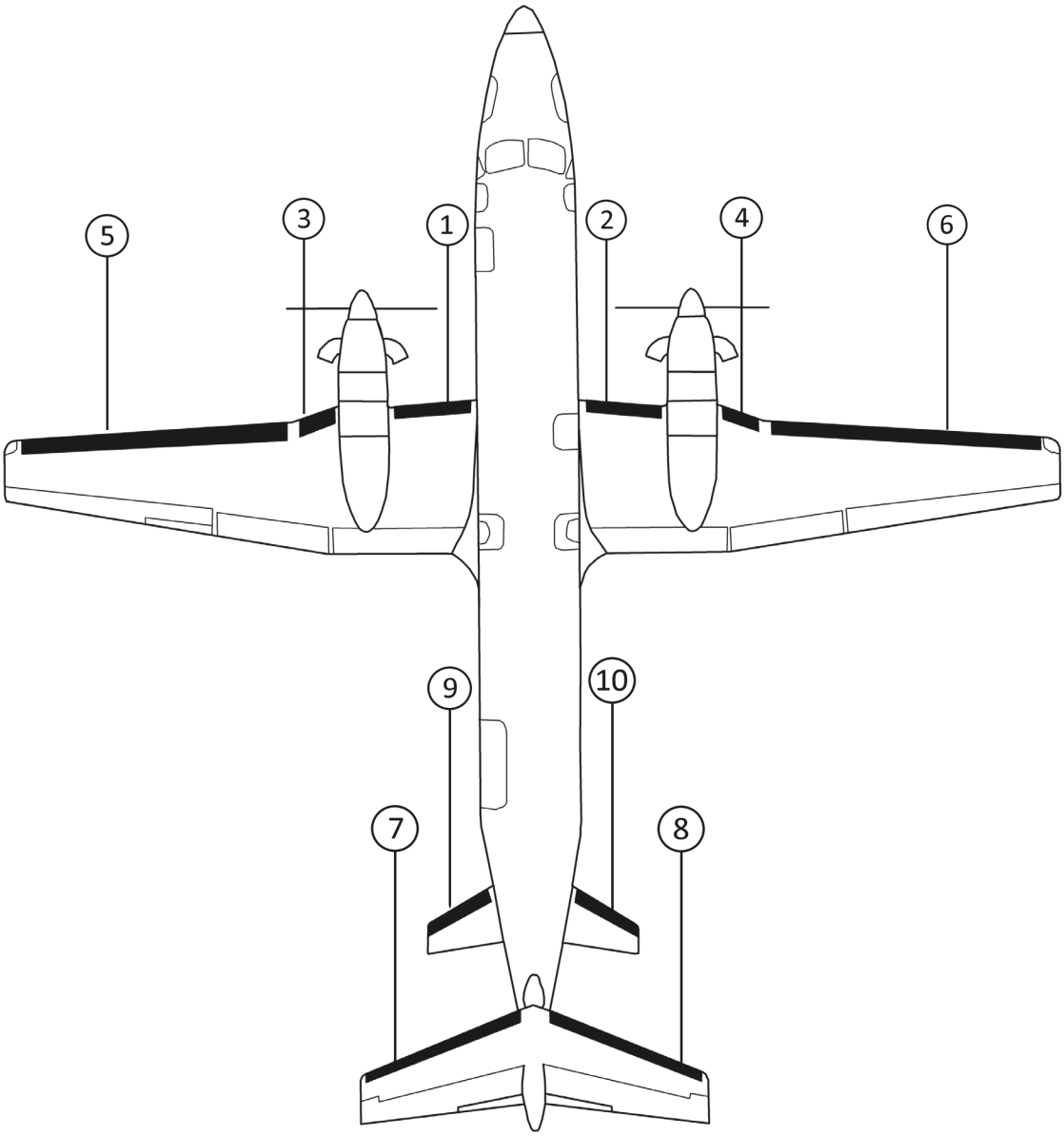

BEECHCRAFT 1900C (AIRLINER) S/N UC-1 UP

BEECHCRAFT 1900C (AIRLINER) S/N UC-31 UP

STANDARD DE-ICE BOOTS

POSITION ID	GOODRICH PART NUMBER	AIRCRAFT OEM P/N	DESCRIPTION	QTY PER AIRCRAFT	WT
1	29S-7D5137-21	114-380036-47	FUSELAGE-NACELLE LH DE-ICE BOOT	1	2.8
2	29S-7D5137-22	114-380036-49	FUSELAGE-NACELLE RH DE-ICE BOOT	1	2.3
3	29S-7D5137-23	114-380036-55	NACELLE-BREAK LH DE-ICE BOOT	1	1.3
4	29S-7D5137-24	114-380036-57	NACELLE-BREAK RH DE-ICE BOOT	1	1.3
5	29S-7D5137-79	114-380036-103	BREAK-TIP LH DE-ICE BOOT	1	7.0
6	29S-7D5137-20	114-380036-29	BREAK-TIP RH DE-ICE BOOT	1	7.0
7	29S-7D5137-25	114-380036-51	HORIZONTAL STABILIZER LH DE-ICE BOOT	1	3.8
7	29S-7D5137-07	114-380036-13	HORIZONTAL STABILIZER LH DE-ICE BOOT	1	3.2
8	29S-7D5137-26	114-380036-53	HORIZONTAL STABILIZER RH DE-ICE BOOT	1	3.8
8	29S-7D5137-08	114-380036-15	HORIZONTAL STABILIZER RH DE-ICE BOOT	1	3.2
9	29S-7D5137-15	114-380036-23	STABILON LH DE-ICE BOOT	1	1.1
10	29S-7D5137-16	114-380036-25	STABILON RH DE-ICE BOOT	1	1.1

OPTIONAL STANDARD DE-ICE BOOTS

POSITION ID	GOODRICH PART NUMBER	AIRCRAFT OEM P/N	DESCRIPTION	QTY PER AIRCRAFT	WT
1	29S-7D5137-59	114-380036-63	FUSELAGE-NACELLE LH (ESTANE®) DE-ICE BOOT	1	2.8
2	29S-7D5137-60	114-380036-65	FUSELAGE-NACELLE RH (ESTANE®) DE-ICE BOOT	1	2.8
3	29S-7D5137-61	114-380036-67	NACELLE-BREAK LH (ESTANE®) DE-ICE BOOT	1	1.1
4	29S-7D5137-62	114-380036-69	NACELLE-BREAK RH (ESTANE®) DE-ICE BOOT	1	1.1
5	29S-7D5137-69	114-380036-85	BREAK-TIP LH (ESTANE®) DE-ICE BOOT	1	7.0
6	29S-7D5137-66	114-380036-79	BREAK-TIP RH (ESTANE®) DE-ICE BOOT	1	7.0

*ESTANE® DE-ICERS HAVE A SURFACE PLY RESISTANT TO DIESTER TYPE ENGINE OIL

FASTboot® DE-ICE BOOTS

POSITION ID	GOODRICH PART NUMBER	AIRCRAFT OEM P/N	DESCRIPTION	QTY PER AIRCRAFT	WT
1	P29S-7D5137-21	114-380067-47	FASTBOOT® FUSELAGE-NACELLE LH DE-ICE BOOT	1	2.8
2	P29S-7D5137-22	114-380067-49	FASTBOOT® FUSELAGE-NACELLE RH DE-ICE BOOT	1	2.3
3	P29S-7D5137-23	114-380067-55	FASTBOOT® NACELLE-BREAK LH DE-ICE BOOT	1	1.3
4	P29S-7D5137-24	114-380067-57	FASTBOOT® NACELLE-BREAK RH DE-ICE BOOT	1	1.3
5	P29S-7D5137-79	114-380036-103	FASTBOOT® BREAK-TIP LH DE-ICE BOOT	1	7.0
6	P29S-7D5137-20	114-380036-29	FASTBOOT® BREAK-TIP LH DE-ICE BOOT	1	7.0
7	P29S-7D5137-25	114-380067-51	FASTBOOT® HORIZONTAL STABILIZER LH DE-ICE BOOT	3	3.8

(CONTINUED ON PAGE 139)

BEECHCRAFT 1900C (AIRLINER) S/N UC-31 UP

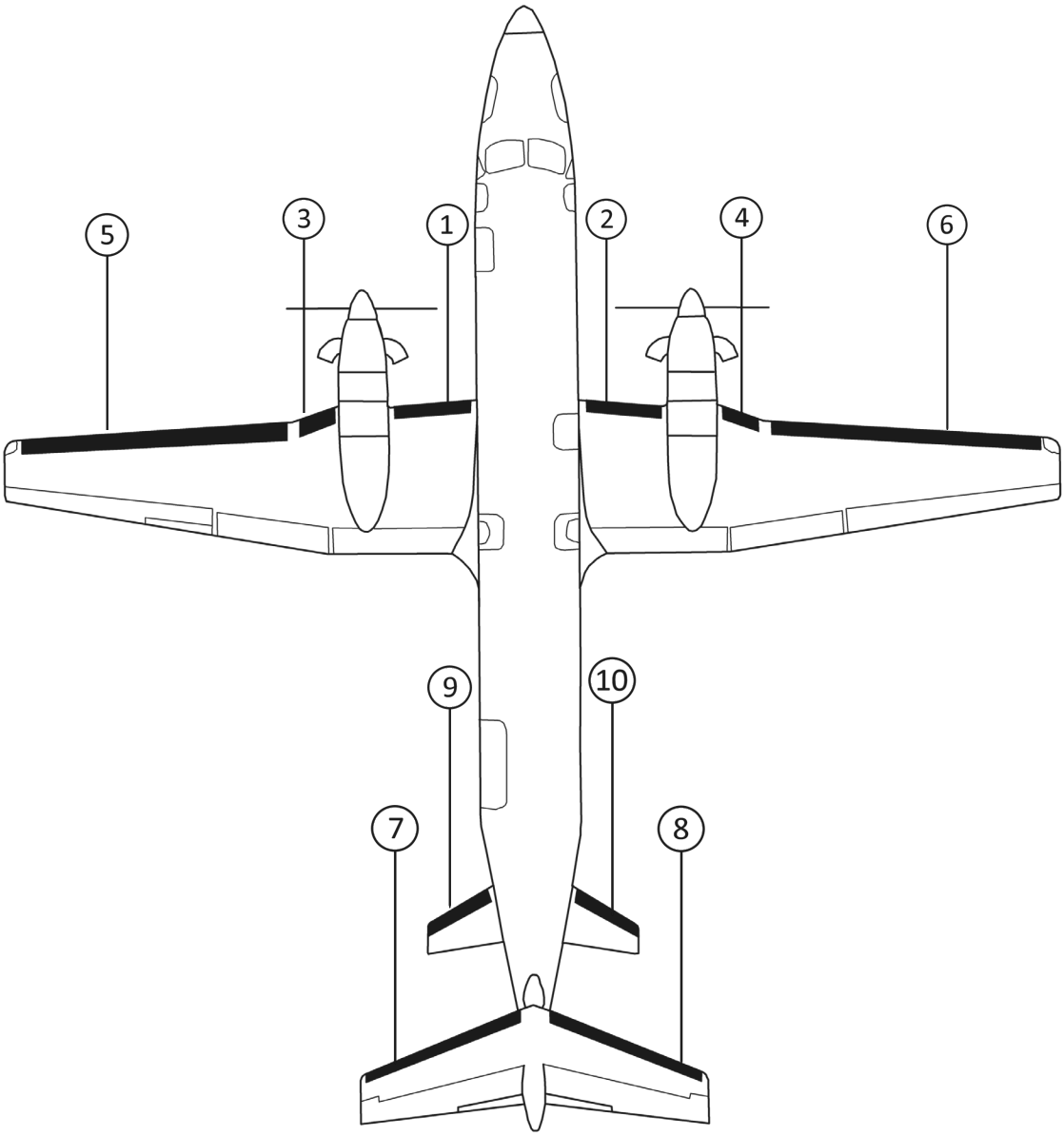

BEECHCRAFT 1900C (AIRLINER) S/N UC-31 UP

BEECHCRAFT 1900C (AIRLINER) S/N UC-31 UP

FASTboot® DE-ICE BOOTS (CONTINUED)

POSITION ID	GOODRICH PART NUMBER	AIRCRAFT OEM P/N	DESCRIPTION	QTY PER AIRCRAFT	WT
7	P29S-7D5137-07	114-380067-13	FASTBOOT® HORIZONTAL STABILIZER LH DE-ICE BOOT	1	3.2
8	P29S-7D5137-26	114-380067-53	FASTBOOT® HORIZONTAL STABILIZER RH DE-ICE BOOT	1	3.8
8	P29S-7D5137-08	114-380067-15	FASTBOOT® HORIZONTAL STABILIZER RH DE-ICE BOOT	1	3.2
9	P29S-7D5137-15	114-380067-23	FASTBOOT® STABILON LH DE-ICE BOOT	1	1.1
10	P29S-7D5137-16	114-380067-25	FASTBOOT® STABILON RH DE-ICE BOOT	1	1.1

OPTIONAL FASTboot® DE-ICE BOOTS

POSITION ID	GOODRICH PART NUMBER	AIRCRAFT OEM P/N	DESCRIPTION	QTY PER AIRCRAFT	WT
1	P29S-7D5137-59	114-380067-63	FASTBOOT® FUSELAGE-NACELLE LH (ESTANE®) DE-ICE BOOT	1	2.8
2	P29S-7D5137-60	114-380067-65	FASTBOOT® FUSELAGE-NACELLE RH (ESTANE®) DE-ICE BOOT	1	2.8
3	P29S-7D5137-61		FASTBOOT® NACELLE-BREAK LH (ESTANE®) DE-ICE BOOT	1	1.1
4	P29S-7D5137-62		FASTBOOT® NACELLE-BREAK RH (ESTANE®) DE-ICE BOOT	1	1.1
5	P29S-7D5137-69	114-380067-85	FASTBOOT® BREAK-TIP LH (ESTANE®) DE-ICE BOOT	1	7.0
6	P29S-7D5137-66	114-380067-79	FASTBOOT® BREAK-TIP RH (ESTANE®) DE-ICE BOOT	1	7.0

*ESTANE® DE-ICERS HAVE A SURFACE PLY RESISTANT TO DIESTER TYPE ENGINE OIL

BEECHCRAFT 1900C (AIRLINER) S/N UC-31 UP

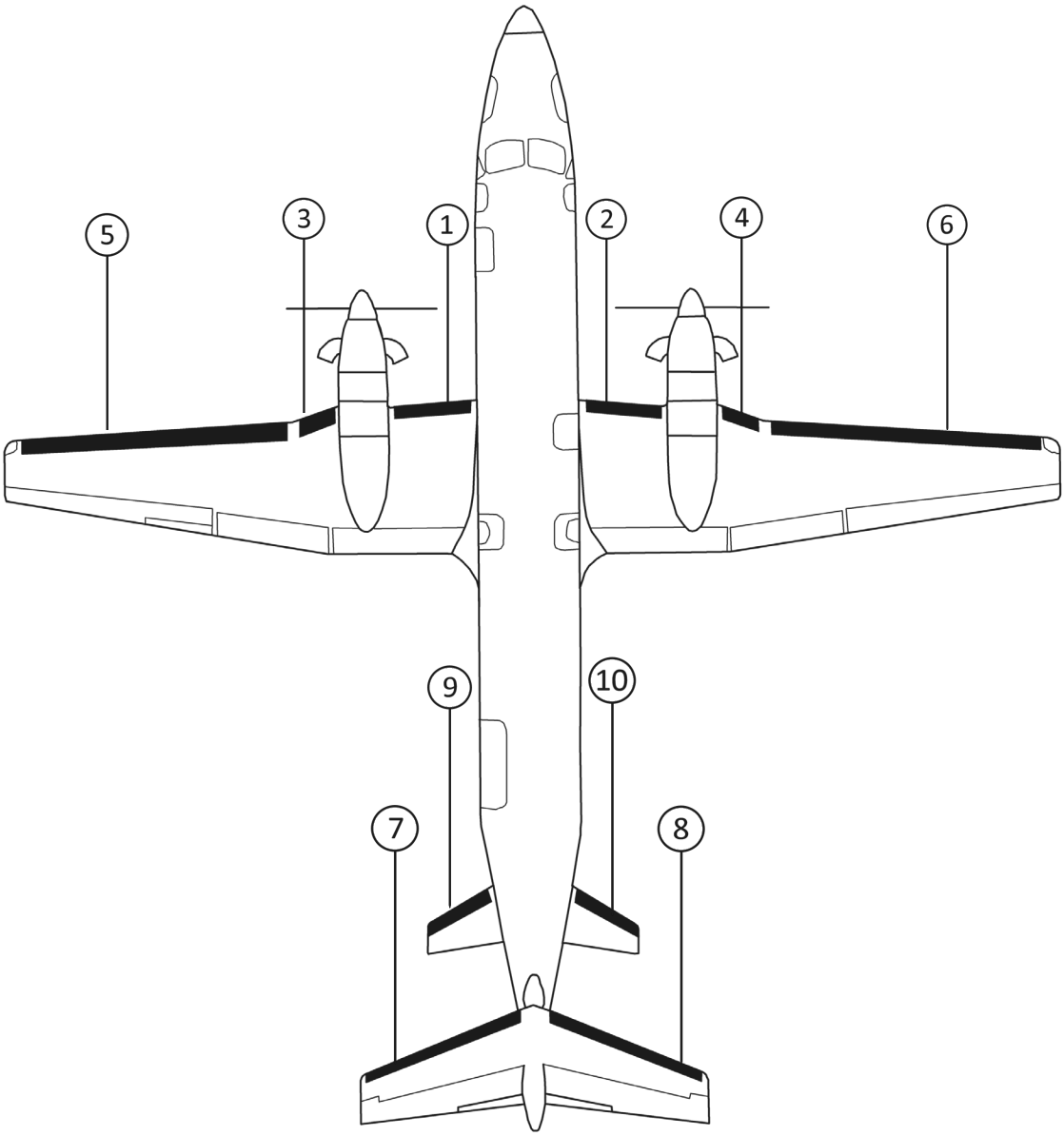

BEECHCRAFT 1900C (AIRLINER) S/N UC-31 UP

BEECHCRAFT 1900D (AIRLINER)

STANDARD DE-ICE BOOTS

POSITION ID	GOODRICH PART NUMBER	AIRCRAFT OEM P/N	DESCRIPTION	QTY PER AIRCRAFT	WT
1	29S-7D5137-21	114-380036-47	FUSELAGE-NACELLE LH DE-ICE BOOT	1	2.8
2	29S-7D5137-22	114-380036-49	FUSELAGE-NACELLE RH DE-ICE BOOT	1	2.3
3	29S-7D5137-23	114-380036-55	NACELLE-BREAK LH DE-ICE BOOT	1	1.3
4	29S-7D5137-24	114-380036-57	NACELLE-BREAK RH DE-ICE BOOT	1	1.3
5	29S-7D5137-77	114-380036-99	BREAK-TIP LH DE-ICE BOOT	1	8.5
6	29S-7D5137-78	114-380036-101	BREAK-TIP RH DE-ICE BOOT	1	8.5
7	29S-7D5137-25	114-380036-51	HORIZONTAL STABILIZER LH DE-ICE BOOT	1	3.8
8	29S-7D5137-26	114-380036-53	HORIZONTAL STABILIZER RH DE-ICE BOOT	1	3.8
9	29S-7D5137-15	114-380036-23	STABILON LH DE-ICE BOOT	1	1.1
10	29S-7D5137-16	114-380036-25	STABILON RH DE-ICE BOOT	1	1.1
11	25S-4D5201-05	114-380036-105	TAILLET LH DE-ICE BOOT	1	0.8
12	25S-4D5201-06	114-380036-107	TAILLET RH DE-ICE BOOT	1	0.8

*ESTANE® DE-ICERS HAVE A SURFACE PLY RESISTANT TO DIESTER TYPE ENGINE OIL

OPTIONAL STANDARD DE-ICE BOOTS

POSITION ID	GOODRICH PART NUMBER	AIRCRAFT OEM P/N	DESCRIPTION	QTY PER AIRCRAFT	WT
5	29S-7D5137-55	114-380036-43	BREAK-TIP LH (ESTANE®) DE-ICE BOOT	1	8.5
6	29S-7D5137-56	114-380036-45	BREAK-TIP RH (ESTANE®) DE-ICE BOOT	1	8.5
6	29S-7D5137-76	114-380036-97	BREAK-TIP RH (ESTANE®) DE-ICE BOOT	1	8.9

FASTboot® DE-ICE BOOTS

POSITION ID	GOODRICH PART NUMBER	AIRCRAFT OEM P/N	DESCRIPTION	QTY PER AIRCRAFT	WT
1	P29S-7D5137-21	114-380067-47	FASTBOOT® FUSELAGE-NACELLE LH DE-ICE BOOT	1	2.8
2	P29S-7D5137-22	114-380067-49	FASTBOOT® FUSELAGE-NACELLE RH DE-ICE BOOT	1	2.3
3	P29S-7D5137-23	114-380067-55	FASTBOOT® NACELLE-BREAK LH DE-ICE BOOT	1	1.3
4	P29S-7D5137-24	114-380067-57	FASTBOOT® NACELLE-BREAK RH DE-ICE BOOT	1	1.3
5	P29S-7D5137-77	114-380067-99	FASTBOOT® BREAK-TIP LH DE-ICE BOOT	1	8.5
6	P29S-7D5137-78	114-380067-101	FASTBOOT® BREAK-TIP RH DE-ICE BOOT	1	8.5
7	P29S-7D5137-25	114-380067-51	FASTBOOT® HORIZONTAL STABILIZER LH DE-ICE BOOT	1	3.8
8	P29S-7D5137-26	114-380067-53	FASTBOOT® HORIZONTAL STABILIZER RH DE-ICE BOOT	1	3.8
9	P29S-7D5137-15	114-380067-23	FASTBOOT® STABILON LH DE-ICE BOOT	1	1.1
10	P29S-7D5137-16	114-380067-25	FASTBOOT® STABILON RH DE-ICE BOOT	1	1.1
11	P29S-4D5201-05	114-380067-105	FASTBOOT® TAILLET LH DE-ICE BOOT	1	1.0
12	P29S-4D5201-06	114-380067-107	FASTBOOT® TAILLET RH DE-ICE BOOT	1	1.0

(CONTINUED ON PAGE 142)

BEECHCRAFT 1900D (AIRLINER)

OPTIONAL FASTboot® DE-ICE BOOTS

POSITION ID	GOODRICH PART NUMBER	AIRCRAFT OEM P/N	DESCRIPTION	QTY PER AIRCRAFT	WT
5	P29S-7D5137-55	114-380067-43	FASTBOOT® BREAK-TIP LH (ESTANE®) DE-ICE BOOT	1	8.5
6	P29S-7D5137-56	114-380067-45	FASTBOOT® BREAK-TIP RH (ESTANE®) DE-ICE BOOT	1	8.5
6	P29S-7D5137-76	114-380067-97	FASTBOOT® BREAK-TIP RH (ESTANE®) DE-ICE BOOT	1	8.9

*ESTANE® DE-ICERS HAVE A SURFACE PLY RESISTANT TO DIESTER TYPE ENGINE OIL

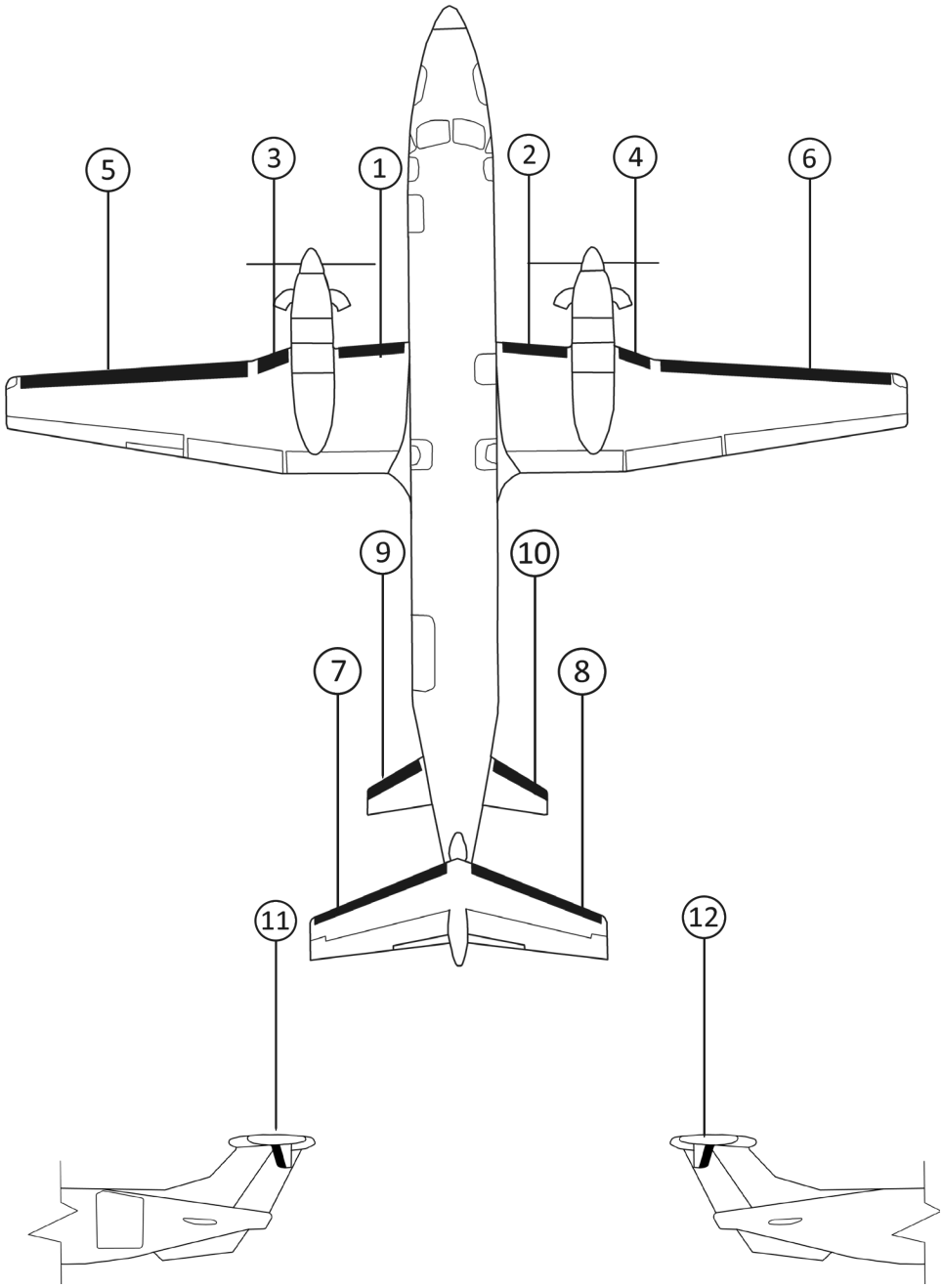

BEECHCRAFT 2000 (STARSHIP)

STANDARD DE-ICE BOOTS

POSITION ID	GOODRICH PART NUMBER	AIRCRAFT OEM P/N	DESCRIPTION	QTY PER AIRCRAFT	WT
1	S29S-7D5220-09		FORWARD WING LH SILVERBOOT™ DE-ICE BOOT	1	7.5
2	S29S-7D5220-10		FORWARD WING RH SILVERBOOT™ DE-ICE BOOT	1	7.5
3	S29S-7D5220-11		MAIN WING INBOARD LH SILVERBOOT™ DE-ICE BOOT	1	9.7
4	S29S-7D5220-12		MAIN WING INBOARD RH SILVERBOOT™ DE-ICE BOOT	1	9.7
5	S29S-7D5220-13		MAIN WING CENTER LH SILVERBOOT™ DE-ICE BOOT	1	3.0
6	S29S-7D5220-14		MAIN WING CENTER RH SILVERBOOT™ DE-ICE BOOT	1	3.0
7	S29S-7D5220-15		MAIN WING OUTBOARD LH SILVERBOOT™ DE-ICE BOOT	1	8.5
8	S29S-7D5220-16		MAIN WING OUTBOARD RH SILVERBOOT™ DE-ICE BOOT	1	8.5

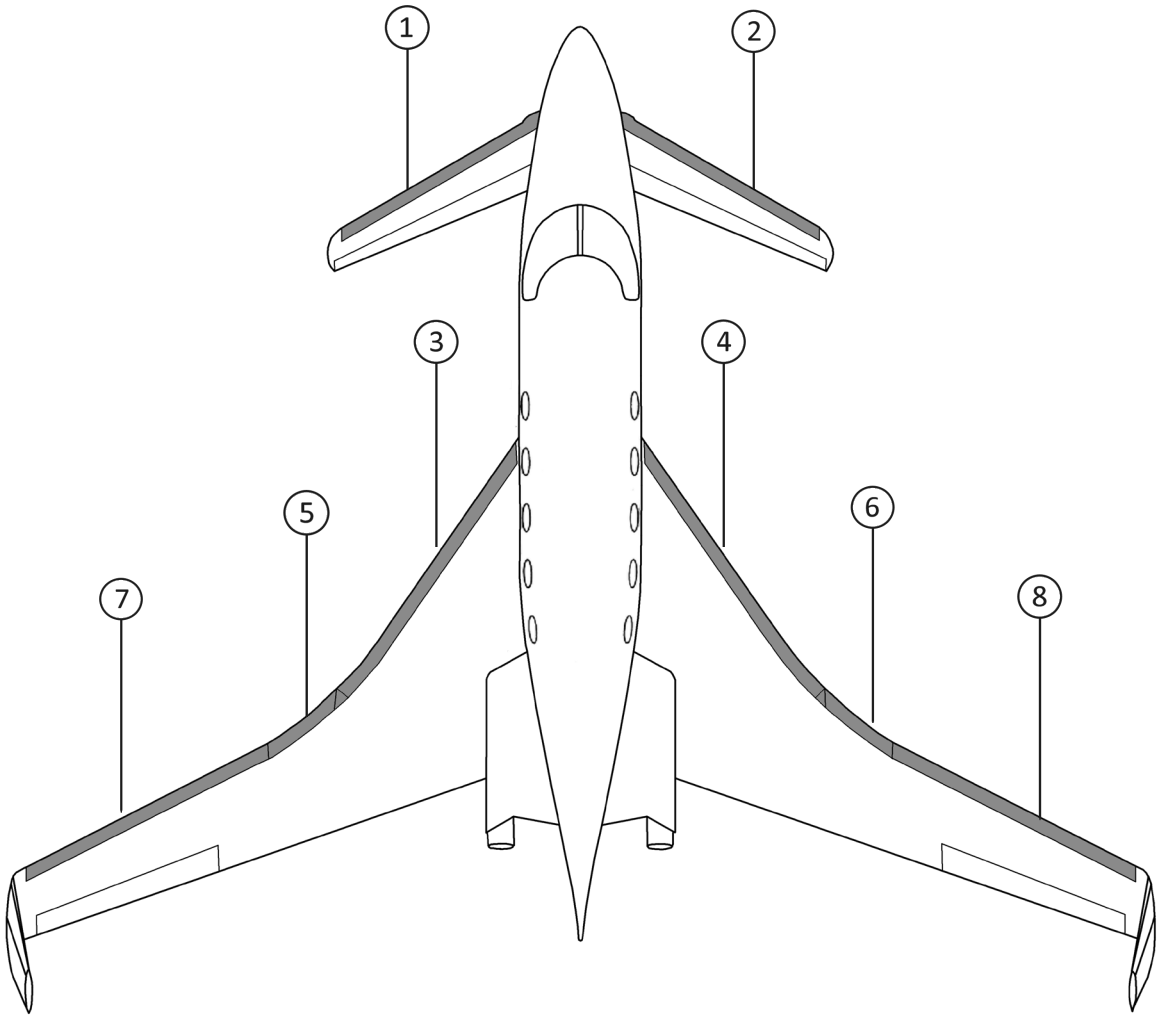

De-ice boot care products

DE-ICER PATCHES AND PIN HOLE KITS ALSO AVAILABLE

Aerospace Protectant™ (32 fl. oz.) P/N 74-451-237-32

Goodrich® Aerospace Protectant™

- Approved for use on all Goodrich de-icers
- Near 100 percent prevention of UV-caused slow fade
- Resistance to dust, soiling and staining
- Water-based formula is environmentally friendly
- Apply as needed – no surface stripping required

Aerospace Cleaner™ (32 fl. oz.) P/N 74-451-238-32

Goodrich® Aerospace Cleaner™

- Approved for use on all Goodrich de-icers
- Can be used on all water-safe materials
- Water-based formula is environmentally friendly
- Apply as needed – no surface stripping required
- Great for removing dirt, grime and bugs

AgeMaster® #1 P/N 74-451-127

AgeMaster® #1

- Rubber preservative that protects against weathering, ozone and ultraviolet rays
- Apply six months after new de-icer is installed
- Reapply every 150 flight hours (twice yearly)
- One quart covers approximately 90 sq. ft. (8.3 sq. m.)

ICEX®II - 6oz
ICEX®II - Pump
ICEX®II - Quart

ICEX®II

- Ice adhesion inhibitor that enhances de-icer performance
- Apply every 50 flight hours during icing season
- One quart covers approximately 400 sq. ft. (37 sq. m)

ShineMaster™ Prep P/N 74-451-179
ShineMaster™ P/N 74-451-178

ShineMaster™

- Cosmetic coating that provides a high-luster shine
- Clean de-icer with ShineMaster Prep before applying 2-3 light coats
- One pint covers approximately 200 sq. ft. (18.6 sq. m)
- Reapply as desired

Specifications subject to change without notice.

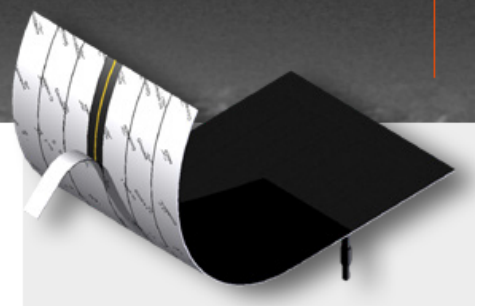

GOODRICH FASTBOOT® PNEUMATIC DE-ICERS

PROVEN PERFORMANCE

Over 20 years experience manufacturing and installing Pressure Sensitive Adhesive (PSA) de-icers

Collins Aerospace manufactures Goodrich pneumatic de-icing boots with our patented FASTboot adhesive system, which saves you time and improves aircraft readiness.

Goodrich FASTboot pneumatic de-icers take the guess work out of de-icer installation. The pre-applied adhesive provides a smooth and consistent de-icer bond at a fraction of the time needed for application of standard de-icers. Simply add the primer to the clean leading-edge surface and allow a five-minute dry time. Following the approved installation procedure, peel and stick the pneumatic de-icer to the leading edge of your aircraft.

KEY BENEFITS/FEATURES

- Reduces installation time
- FASTboot de-icers can be flown immediately
- De-icers can be inflated two hours after installation
- Reduces hazardous waste through pre-applied adhesive
- Initial installation guarantee

Collins Aerospace

collinsaerospace.com/deicing

COMPARISON OF STANDARD AND GOODRICH FASTBOOT® PNEUMATIC DE-ICERS

	Goodrich FASTboot de-icers	Standard de-icers
Installation Materials	Primer	Cement / solvent
Installation Labor	2-3 coats primer / peel and stick	2 coats adhesive / reactivate
Installation Time	5 minute dry time for primer	2 coats adhesive with 1 hour dry time between coats
Turn Time	1 hour set time	24-48 hour set time prior to de-ice inflation
Final Finish	Edge sealant	Edge sealant
Environmental Impact	Clean primer brush	Hazardous waste includes adhesive, solvents and rags

FASTboot Primer P/N 74-451-207

Goodrich® FASTboot Primer

- 1/2 pint covers approximately 15 sq. ft.
- No shelf life - on condition
- Easy application

CESSNA 208 (CARAVAN)

STANDARD DE-ICE BOOTS

POSITION ID	GOODRICH PART NUMBER	AIRCRAFT OEM P/N	DESCRIPTION	QTY PER AIRCRAFT	WT
1	25S-7D5175-01		INBOARD WING LH DE-ICE BOOT	1	5.6
2	25S-7D5175-02		INBOARD WING RH DE-ICE BOOT	1	5.6
3	25S-7D5175-11		OUTBOARD WING LH DE-ICE BOOT	1	3.8
4	25S-7D5175-12		OUTBOARD WING RH DE-ICE BOOT	1	3.8
5	25S-7D5175-09		STRUT LH/RH DE-ICE BOOT	2	1.5
6	25S-7D5175-05		HORIZONTAL STABILIZER LH/RH DE-ICE BOOT	2	2.8
7	25S-7D5175-07		VERTICAL STABILIZER DE-ICE BOOT	1	1.4
9	35S-7D5175-21		MLG FAIRING LH DE-ICE BOOT	1	0.4
10	35S-7D5175-22		MLG FAIRING RH DE-ICE BOOT	1	0.4

OPTIONAL STANDARD DE-ICE BOOTS

POSITION ID	GOODRICH PART NUMBER	AIRCRAFT OEM P/N	DESCRIPTION	QTY PER AIRCRAFT	WT
1	29S-7D5175-23*		INBOARD WING LH DE-ICE BOOT	1	6.3
2	29S-7D5175-24*		INBOARD WING RH DE-ICE BOOT	1	6.3
5	29S-7D5175-31*		STRUT LH/RH DE-ICE BOOT	2	1.7
6	29S-7D5175-27*		HORIZONTAL STABILIZER LH/RH DE-ICE BOOT	2	3.1
7	29S-7D5175-29*		VERTICAL STABILIZER DE-ICE BOOT	1	1.5
8	29S-7D5175-15		CARGO BOX DE-ICE BOOT	1	3.1

*(P)29S-7D5175 DE-ICERS ARE INTERCHANGABLE WITH EQUIVALENT (P)25S-7D5175 DE-ICERS

FASTboot® DE-ICE BOOTS

POSITION ID	GOODRICH PART NUMBER	AIRCRAFT OEM P/N	DESCRIPTION	QTY PER AIRCRAFT	WT
1	P25S-7D5175-01		FASTBOOT® INBOARD WING LH DE-ICE BOOT	1	5.6
2	P25S-7D5175-02		FASTBOOT® INBOARD WING RH DE-ICE BOOT	1	5.6
3	P25S-7D5175-11		FASTBOOT® OUTBOARD WING LH DE-ICE BOOT	1	3.8
4	P25S-7D5175-12		FASTBOOT® OUTBOARD WING RH DE-ICE BOOT	1	3.8
5	P25S-7D5175-09		FASTBOOT® STRUT LH/RH DE-ICE BOOT	2	1.5
6	P25S-7D5175-05		FASTBOOT® HORIZONTAL STABILIZER LH/RH DE-ICE BOOT	2	2.8
7	P25S-7D5175-07		FASTBOOT® VERTICAL STABILIZER DE-ICE BOOT	1	1.4

OPTIONAL FASTboot® DE-ICE BOOTS

POSITION ID	GOODRICH PART NUMBER	AIRCRAFT OEM P/N	DESCRIPTION	QTY PER AIRCRAFT	WT
1	P29S-7D5175-23*		FASTBOOT® INBOARD WING LH DE-ICE BOOT	1	6.3

(CONTINUED ON PAGE 148)

CESSNA 208 (CARAVAN)

OPTIONAL FASTboot® DE-ICE BOOTS (CONTINUED)

POSITION ID	GOODRICH PART NUMBER	AIRCRAFT OEM P/N	DESCRIPTION	QTY PER AIRCRAFT	WT
2	P29S-7D5175-24*		FASTBOOT® INBOARD WING RH DE-ICE BOOT	1	6.3
5	P29S-7D5175-31*		FASTBOOT® STRUT LH/RH DE-ICE BOOT	2	1.7
6	P29S-7D5175-27*		FASTBOOT® HORIZONTAL STABILIZER LH/RH DE-ICE BOOT	2	3.1
7	P29S-7D5175-29*		FASTBOOT® VERTICAL STABILIZER DE-ICE BOOT	1	1.5

* (P)29S-7D5175 DE-ICERS ARE INTERCHANGABLE WITH EQUIVALENT (P)25S-7D5175 DE-ICERS

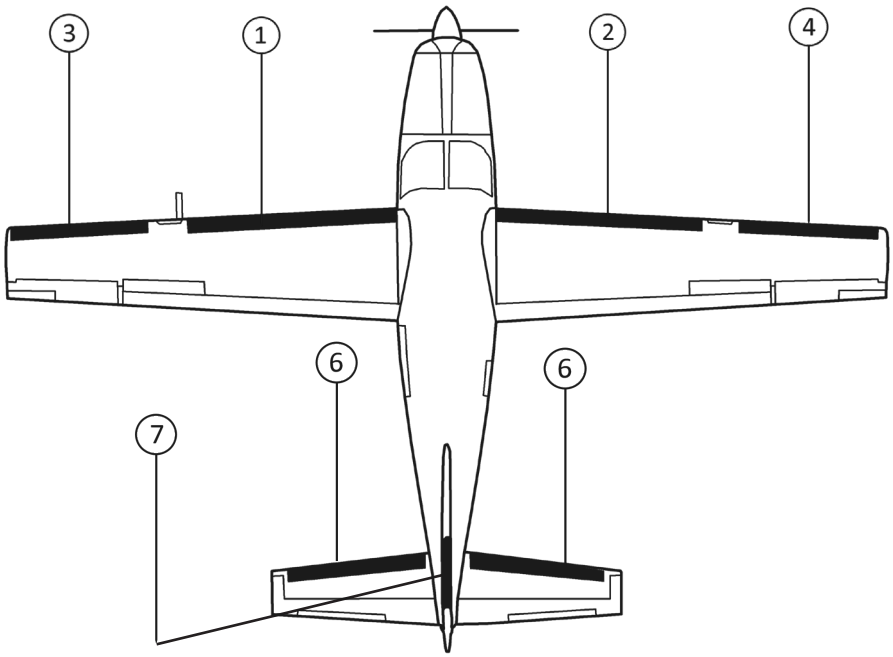

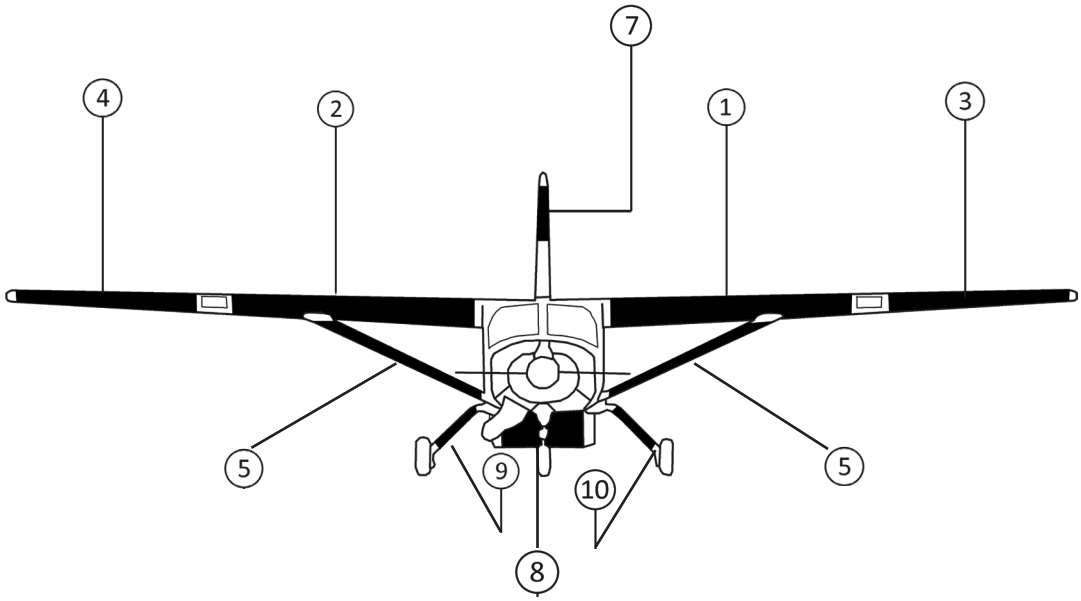

CESSNA 208A (CARAVAN)

STANDARD DE-ICE BOOTS

POSITION ID	GOODRICH PART NUMBER	AIRCRAFT OEM P/N	DESCRIPTION	QTY PER AIRCRAFT	WT
1	25S-7D5175-01		INBOARD WING LH DE-ICE BOOT	1	5.6
2	25S-7D5175-02		INBOARD WING RH DE-ICE BOOT	1	5.6
3	25S-7D5175-11		OUTBOARD WING LH DE-ICE BOOT	1	3.8
4	25S-7D5175-12		OUTBOARD WING RH DE-ICE BOOT	1	3.8
5	25S-7D5175-09		STRUT LH/RH DE-ICE BOOT	2	1.5
6	25S-7D5175-05		HORIZONTAL STABILIZER LH/RH DE-ICE BOOT	2	2.8
7	25S-7D5175-13		VERTICAL STABILIZER DE-ICE BOOT	1	1.8
9	35S-7D5175-21		MLG FAIRING LH DE-ICE BOOT	1	0.4
10	35S-7D5175-22		MLG FAIRING RH DE-ICE BOOT	1	0.4

OPTIONAL STANDARD DE-ICE BOOTS

POSITION ID	GOODRICH PART NUMBER	AIRCRAFT OEM P/N	DESCRIPTION	QTY PER AIRCRAFT	WT
1	29S-7D5175-23*		INBOARD WING LH DE-ICE BOOT	1	6.3
2	29S-7D5175-24*		INBOARD WING RH DE-ICE BOOT	1	6.3
3	29S-7D5175-25*		OUTBOARD WING LH DE-ICE BOOT	1	4.3
4	29S-7D5175-26*		OUTBOARD WING RH DE-ICE BOOT	1	4.3
5	29S-7D5175-31*		STRUT LH/RH DE-ICE BOOT	2	1.7
6	29S-7D5175-27*		HORIZONTAL STABILIZER LH/RH DE-ICE BOOT	2	3.1
7	29S-7D5175-29*		VERTICAL STABILIZER DE-ICE BOOT	1	1.5
8	29S-7D5175-15		CARGO BOX DE-ICE BOOT	1	3.1
8	29S-7D5175-20		CARGO BOX (ESTANE®) DE-ICE BOOT	1	3.1

ESTANE® DE-ICERS HAVE A SURFACE PLY RESISTANT TO DIESTER TYPE ENGINE OIL

*(P)29S-7D5175 DE-ICERS ARE INTERCHANGABLE WITH EQUIVALENT (P)25S-7D5175 DE-ICERS

FASTboot® DE-ICE BOOTS

POSITION ID	GOODRICH PART NUMBER	AIRCRAFT OEM P/N	DESCRIPTION	QTY PER AIRCRAFT	WT
1	P25S-7D5175-01		FASTBOOT® INBOARD WING LH DE-ICE BOOT (ALTERNATE P/N 29S-7D5175-23)	1	5.6
2	P25S-7D5175-02		FASTBOOT® INBOARD WING RH DE-ICE BOOT (ALTERNATE P/N 29S-7D5175-24)	1	5.6
3	P25S-7D5175-11		FASTBOOT® OUTBOARD WING LH DE-ICE BOOT (REPLACES 25S-7D5175-03 - ALTERNATE P/N 29S-7D5175-25)	1	3.8
4	P25S-7D5175-12		FASTBOOT® OUTBOARD WING RH DE-ICE BOOT (REPLACES 25S-7D5175-04 - ALTERNATE P/N 29S-7D5175-26)	1	3.8
5	P25S-7D5175-09		FASTBOOT® STRUT DE-ICE BOOT (ALTERNATE P/N 29S-7D5175-31)	2	1.5

(CONTINUED ON PAGE 151)

CESSNA 208A (CARAVAN)

CESSNA 208A (CARAVAN)

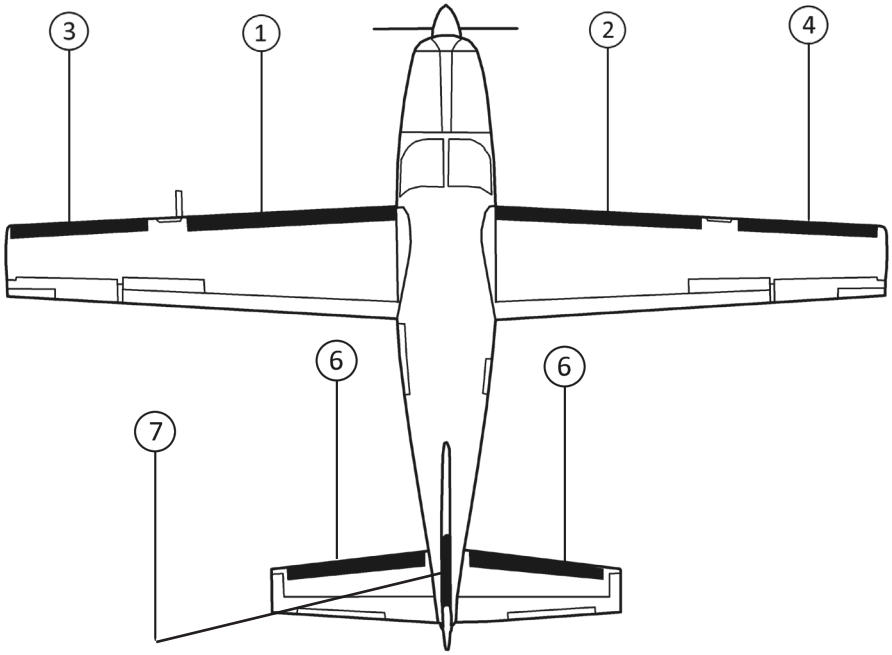

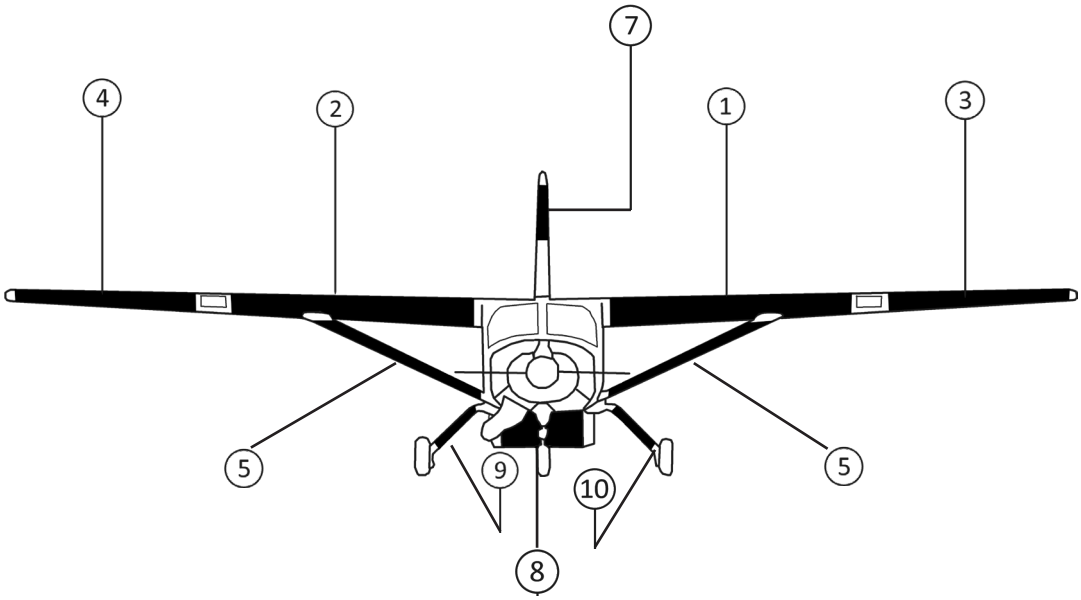

CESSNA 208A (CARAVAN)

FASTboot® DE-ICE BOOTS (CONTINUED)

POSITION ID	GOODRICH PART NUMBER	AIRCRAFT OEM P/N	DESCRIPTION	QTY PER AIRCRAFT	WT
6	P25S-7D5175-05		FASTBOOT® HORIZONTAL STABILIZER LH/RH DE-ICE BOOT (ALTERNATE P/N 29S-7D5175-27)	2	2.8
7	P25S-7D5175-13		FASTBOOT® VERTICAL STABILIZER DE-ICE BOOT	1	1.8
9	P35S-7D5175-21		FASTBOOT® MLG FAIRING DE-ICE BOOT	1	0.4
10	P35S-7D5175-22		FASTBOOT® MLG FAIRING DE-ICE BOOT	1	0.4

*(P)29S-7D5175 DE-ICERS ARE INTERCHANGABLE WITH EQUIVALENT (P)25S-7D5175 DE-ICERS

OPTIONAL FASTboot® DE-ICE BOOTS

POSITION ID	GOODRICH PART NUMBER	AIRCRAFT OEM P/N	DESCRIPTION	QTY PER AIRCRAFT	WT
1	P29S-7D5175-23*		FASTBOOT® INBOARD WING LH DE-ICE BOOT (ALTERNATE P/N 25S-7D5175-01)	1	6.3
2	P29S-7D5175-24*		FASTBOOT® INBOARD WING RH DE-ICE BOOT (ALTERNATE P/N 25S-7D5175-01)	1	6.3
3	P29S-7D5175-25*		FASTBOOT® OUTBOARD WING LH DE-ICE BOOT (REPLACES 25S-7D5175-03 - ALTERNATE P/N 29S-7D5175-11)	1	4.3
4	P29S-7D5175-26*		FASTBOOT® OUTBOARD WING RH DE-ICE BOOT (REPLACES 25S-7D5175-04 - ALTERNATE P/N 29S-7D5175-12)	1	4.3
6	P29S-7D5175-27*		FASTBOOT® HORIZONTAL STABILIZER LH/RH DE-ICE BOOT (ALTERNATE P/N 25S-7D5175-05)	2	3.1
7	P29S-7D5175-29*		FASTBOOT® VERTICAL FIN DE-ICE BOOT (ALTERNATE P/N 25S-7D5175-07)	1	1.5
5	P29S-7D5175-31*		FASTBOOT® STRUT DE-ICE BOOT (ALTERNATE P/N 25S-7D5175-09)	2	1.7

* (P)29S-7D5175 DE-ICERS ARE INTERCHANGABLE WITH EQUIVALENT (P)25S-7D5175 DE-ICERS

CESSNA 208A (CARAVAN)

CESSNA 208A (CARAVAN)

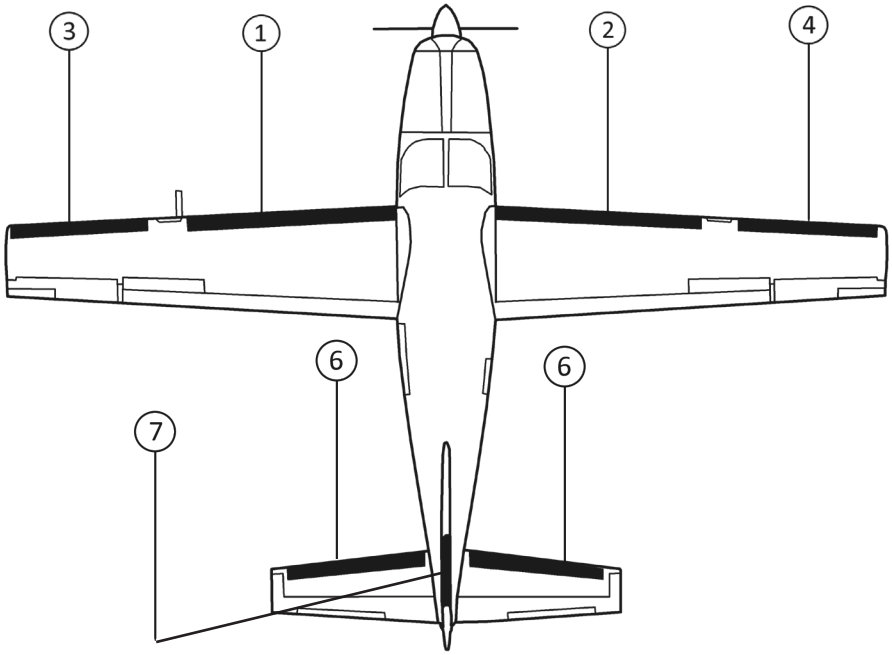

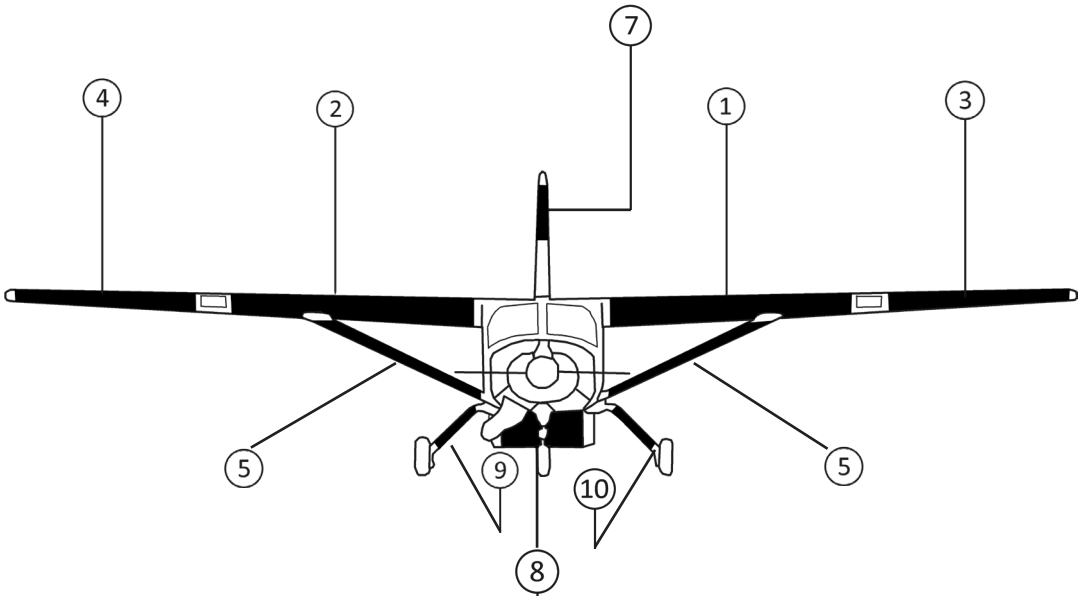

CESSNA 208B (GRAND CARAVAN)

STANDARD DE-ICE BOOTS

POSITION ID	GOODRICH PART NUMBER	AIRCRAFT OEM P/N	DESCRIPTION	QTY PER AIRCRAFT	WT
1	25S-7D5175-01		INBOARD WING LH DE-ICE BOOT	1	5.6
2	25S-7D5175-02		INBOARD WING RH DE-ICE BOOT	1	5.6
3	25S-7D5175-11		OUTBOARD WING LH DE-ICE BOOT	1	3.8
4	25S-7D5175-12		OUTBOARD WING RH DE-ICE BOOT	1	3.8
5	25S-7D5175-09		STRUT LH/RH DE-ICE BOOT	2	1.5
6	25S-7D5175-05		HORIZONTAL STABILIZER LH/RH DE-ICE BOOT	2	2.8
7	25S-7D5175-13		VERTICAL STABILIZER DE-ICE BOOT	1	1.8
9	35S-7D5175-21		MLG FAIRING LH DE-ICE BOOT	1	0.4
10	35S-7D5175-22		MLG FAIRING RH DE-ICE BOOT	1	0.4

OPTIONAL STANDARD DE-ICE BOOTS

POSITION ID	GOODRICH PART NUMBER	AIRCRAFT OEM P/N	DESCRIPTION	QTY PER AIRCRAFT	WT
1	29S-7D5175-23*		INBOARD WING LH DE-ICE BOOT	1	6.3
2	29S-7D5175-24*		INBOARD WING RH DE-ICE BOOT	1	6.3
3	29S-7D5175-25*		OUTBOARD WING LH DE-ICE BOOT	1	4.3
4	29S-7D5175-26*		OUTBOARD WING RH DE-ICE BOOT	1	4.3
5	29S-7D5175-31*		STRUT LH/RH DE-ICE BOOT	2	1.7
6	29S-7D5175-27*		HORIZONTAL STABILIZER LH/RH DE-ICE BOOT	2	3.1
7	29S-7D5175-29*		VERTICAL STABILIZER DE-ICE BOOT	1	1.5
8	29S-7D5175-15		CARGO BOX DE-ICE BOOT	1	3.1
8	29S-7D5175-20		CARGO BOX (ESTANE®) DE-ICE BOOT	1	3.1

ESTANE® DE-ICERS HAVE A SURFACE PLY RESISTANT TO DIESTER TYPE ENGINE OIL

*(P) 29S-7D5175 DE-ICERS ARE INTERCHANGABLE WITH EQUIVALENT (P) 25S-7D5175 DE-ICERS

FASTboot® DE-ICE BOOTS

POSITION ID	GOODRICH PART NUMBER	AIRCRAFT OEM P/N	DESCRIPTION	QTY PER AIRCRAFT	WT
1	P25S-7D5175-01		FASTBOOT® INBOARD WING LH DE-ICE BOOT	1	5.6
2	P25S-7D5175-02		FASTBOOT® INBOARD WING RH DE-ICE BOOT	1	5.6
3	P25S-7D5175-11		FASTBOOT® OUTBOARD WING LH DE-ICE BOOT	1	3.8
4	P25S-7D5175-12		FASTBOOT® OUTBOARD WING RH DE-ICE BOOT	1	3.8
5	P25S-7D5175-09		FASTBOOT® STRUT LH/RH DE-ICE BOOT	2	1.5
6	P25S-7D5175-05		FASTBOOT® HORIZONTAL STABILIZER LH/RH DE-ICE BOOT	2	2.8
7	P25S-7D5175-07		FASTBOOT® VERTICAL STABILIZER DE-ICE BOOT	1	1.4

*(P) 29S-7D5175 DE-ICERS ARE INTERCHANGABLE WITH EQUIVALENT (P) 25S-7D5175 DE-ICERS

(CONTINUED ON PAGE 155)

CESSNA 208B (GRAND CARAVAN)

CESSNA 208B (GRAND CARAVAN)

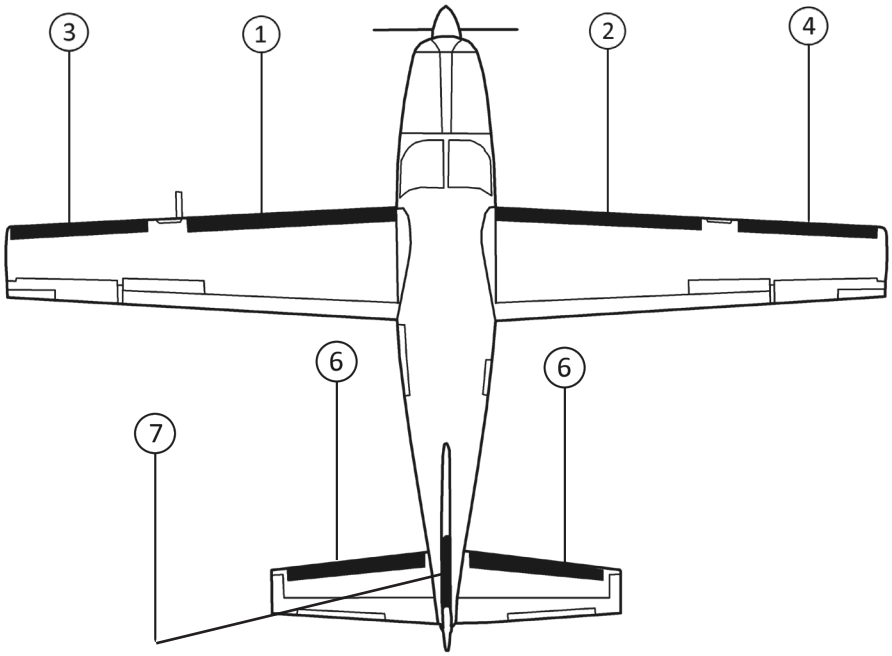

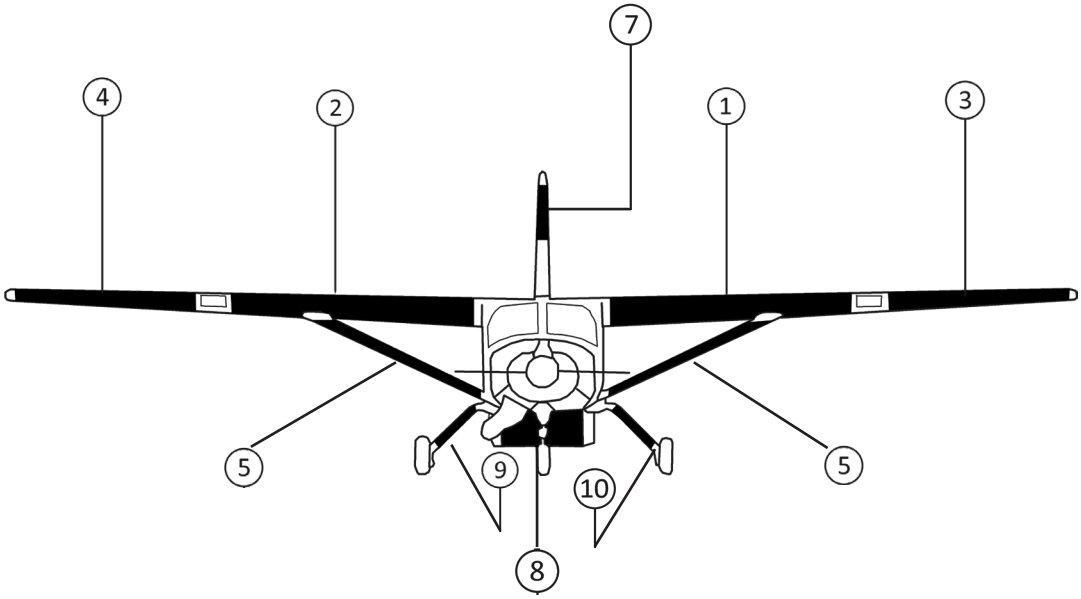

CESSNA 208B (GRAND CARAVAN)

OPTIONAL FASTboot® DE-ICE BOOTS

POSITION ID	GOODRICH PART NUMBER	AIRCRAFT OEM P/N	DESCRIPTION	QTY PER AIRCRAFT	WT
1	P29S-7D5175-23*		FASTBOOT® INBOARD WING LH DE-ICE BOOT	1	6.3
2	P29S-7D5175-24*		FASTBOOT® INBOARD WING RH DE-ICE BOOT	1	6.3
3	P29S-7D5175-25*		FASTBOOT® OUTBOARD WING LH DE-ICE BOOT (REPLACES 25S-7D5175-03 - ALTERNATE P/N 29S-7D5175-11)	1	4.3
4	P29S-7D5175-26*		FASTBOOT® OUTBOARD WING RH DE-ICE BOOT (REPLACES 25S-7D5175-04 - ALTERNATE P/N 29S-7D5175-12)	1	4.3
5	P29S-7D5175-31*		FASTBOOT® STRUT LH/RH DE-ICE BOOT	2	1.7
6	P29S-7D5175-27*		FASTBOOT® HORIZONTAL STABILIZER LH/RH DE-ICE BOOT	2	3.1
7	P29S-7D5175-29*		FASTBOOT® VERTICAL STABILIZER DE-ICE BOOT	1	1.5

*(P) 29S-7D5175 DE-ICERS ARE INTERCHANGABLE WITH EQUIVALENT (P) 25S-7D5175 DE-ICERS

CESSNA 208B (GRAND CARAVAN)

CESSNA 208B (GRAND CARAVAN)

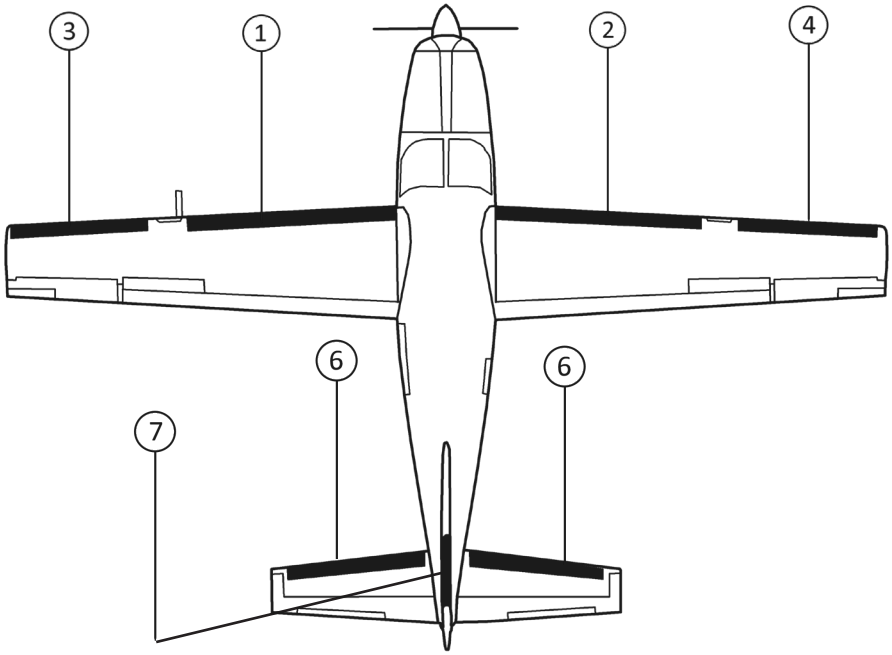

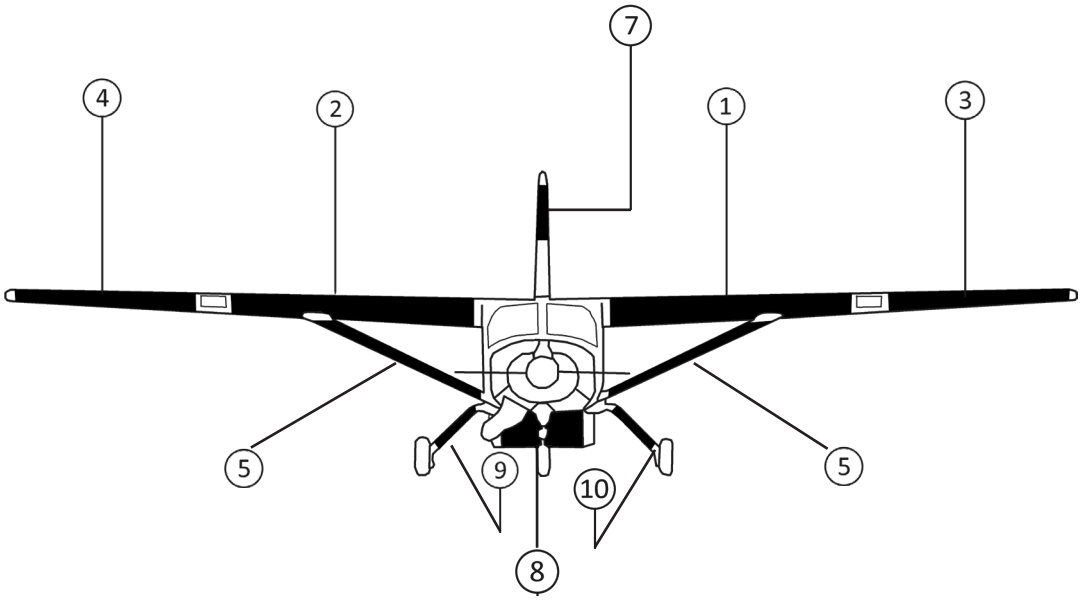

CESSNA 210 (CENTURION)

STANDARD DE-ICE BOOTS

POSITION ID	GOODRICH PART NUMBER	AIRCRAFT OEM P/N	DESCRIPTION	QTY PER AIRCRAFT	WT
1	23S-2038-6-1		WING LH DE-ICE BOOT	1	4.7
2	23S-2038-5-2		WING RH DE-ICE BOOT	1	4.8
3	23S-2038-3-1		HORIZONTAL STABILIZER LH/RH DE-ICE BOOT	2	1.5

OPTIONAL STANDARD DE-ICE BOOTS

POSITION ID	GOODRICH PART NUMBER	AIRCRAFT OEM P/N	DESCRIPTION	QTY PER AIRCRAFT	WT
1	23S-2038-5-1*		WING LH DE-ICE BOOT	1	4.3

*23S-2038-5-1 IS SHORTER TO ACCOMMODATE LANDING LIGHT OPTION

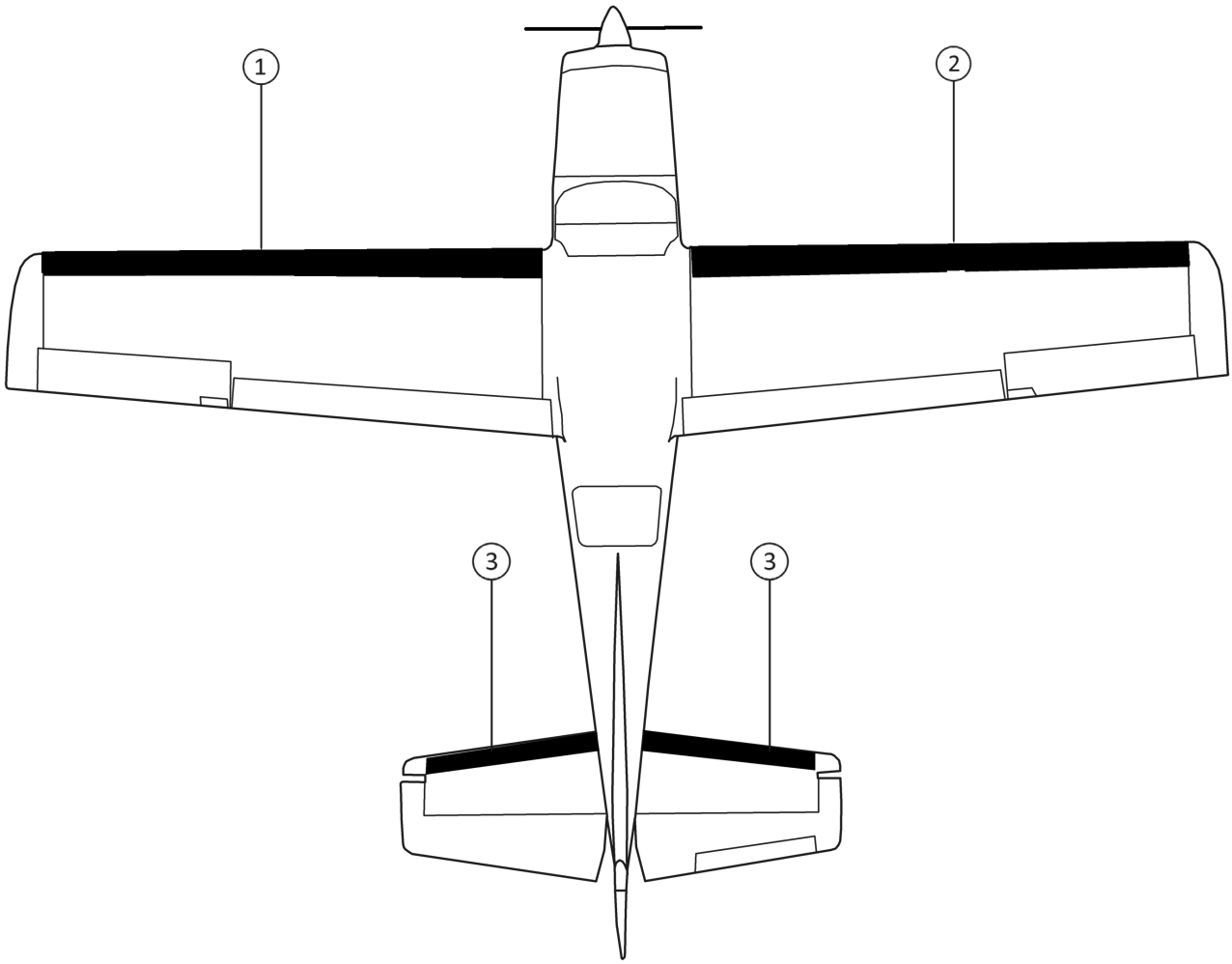

CESSNA 210A (CENTURION)

STANDARD DE-ICE BOOTS

POSITION ID	GOODRICH PART NUMBER	AIRCRAFT OEM P/N	DESCRIPTION	QTY PER AIRCRAFT	WT
1	23S-2038-6-1		WING LH DE-ICE BOOT	1	4.7
2	23S-2038-5-2		WING RH DE-ICE BOOT	1	4.8
3	23S-2038-3-1		HORIZONTAL STABILIZER LH/RH DE-ICE BOOT	2	1.5

OPTIONAL STANDARD DE-ICE BOOTS

POSITION ID	GOODRICH PART NUMBER	AIRCRAFT OEM P/N	DESCRIPTION	QTY PER AIRCRAFT	WT
1	23S-2038-5-1*		WING LH DE-ICE BOOT	1	4.3

*23S-2038-5-1 IS SHORTER TO ACCOMMODATE LANDING LIGHT OPTION

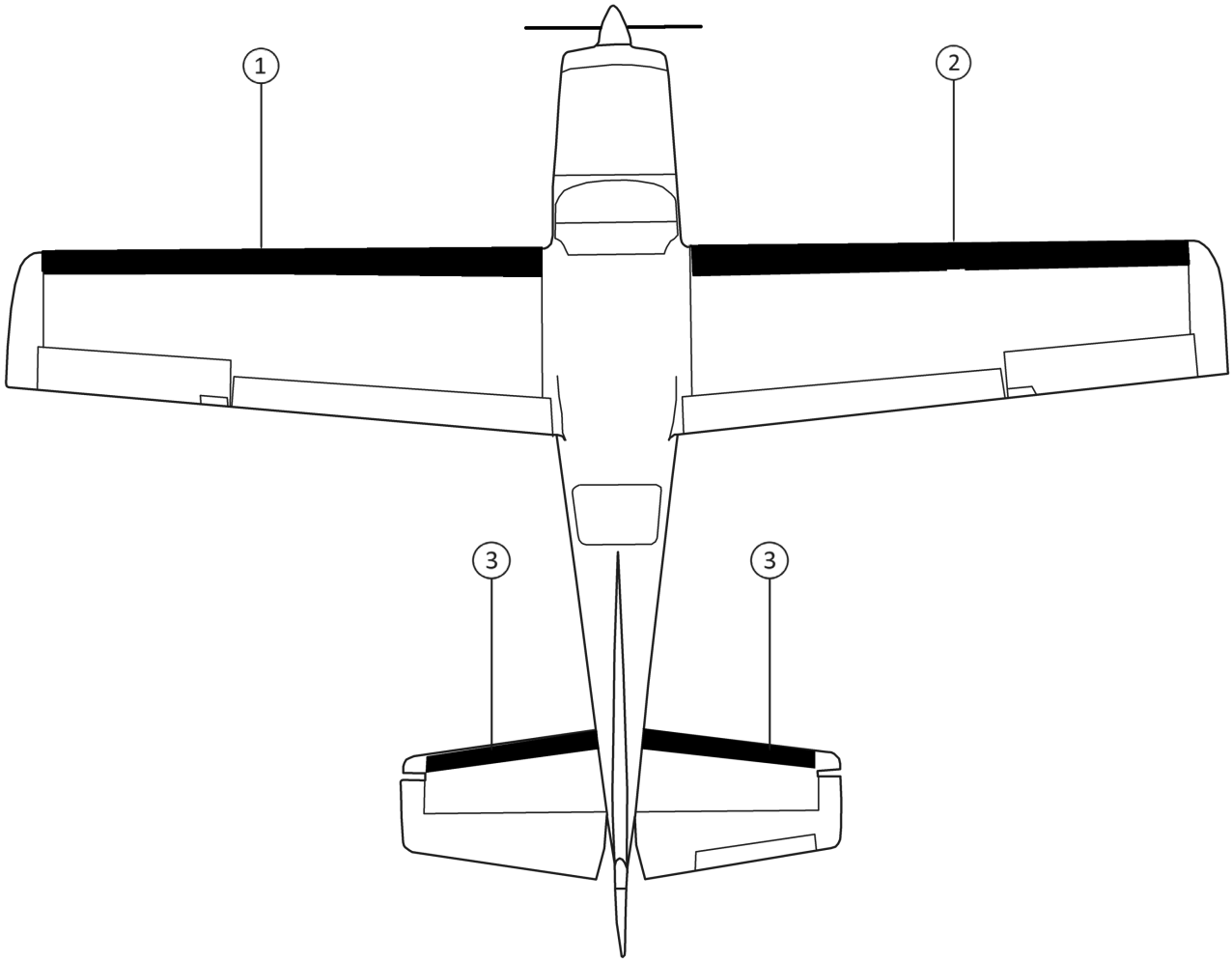

CESSNA 210H (CENTURION)

STANDARD DE-ICE BOOTS

POSITION ID	GOODRICH PART NUMBER	AIRCRAFT OEM P/N	DESCRIPTION	QTY PER AIRCRAFT	WT
1	23S-2038-6-1		WING LH DE-ICE BOOT	1	4.7
2	23S-2038-5-2		WING RH DE-ICE BOOT	1	4.8
3	23S-2038-3-1		HORIZONTAL STABILIZER LH/RH DE-ICE BOOT	2	1.5

OPTIONAL STANDARD DE-ICE BOOTS

POSITION ID	GOODRICH PART NUMBER	AIRCRAFT OEM P/N	DESCRIPTION	QTY PER AIRCRAFT	WT
1	23S-2038-5-1*		WING LH DE-ICE BOOT	1	4.3

*23S-2038-5-1 IS SHORTER TO ACCOMMODATE LANDING LIGHT OPTION

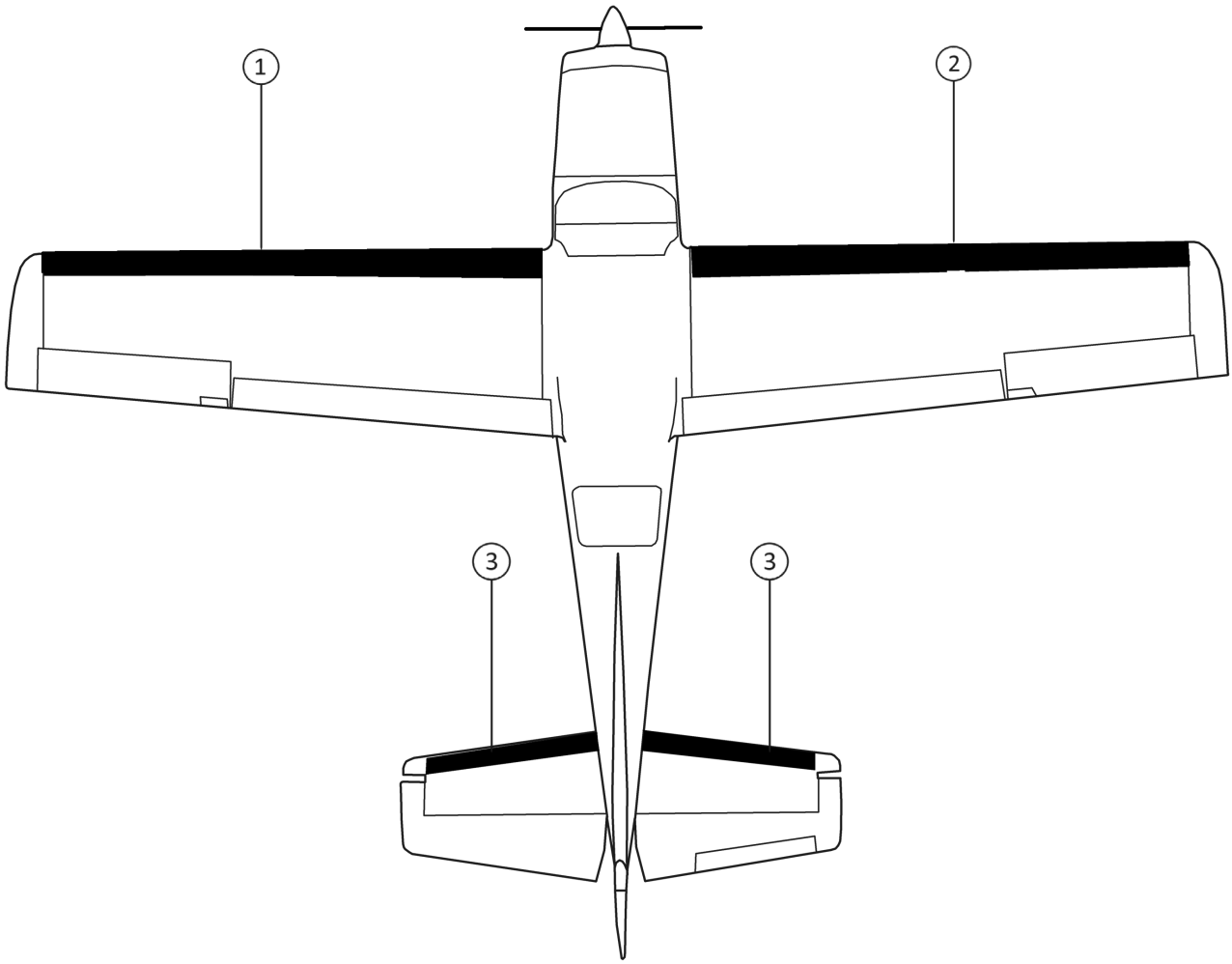

CESSNA 210J (CENTURION)

STANDARD DE-ICE BOOTS

POSITION ID	GOODRICH PART NUMBER	AIRCRAFT OEM P/N	DESCRIPTION	QTY PER AIRCRAFT	WT
1	23S-2038-6-1		WING LH DE-ICE BOOT	1	4.7
2	23S-2038-5-2		WING RH DE-ICE BOOT	1	4.8
3	23S-2038-3-1		HORIZONTAL STABILIZER LH/RH DE-ICE BOOT	2	1.5

OPTIONAL STANDARD DE-ICE BOOTS

POSITION ID	GOODRICH PART NUMBER	AIRCRAFT OEM P/N	DESCRIPTION	QTY PER AIRCRAFT	WT
1	23S-2038-5-1*		WING LH DE-ICE BOOT	1	4.3

*23S-2038-5-1 IS SHORTER TO ACCOMMODATE LANDING LIGHT OPTION

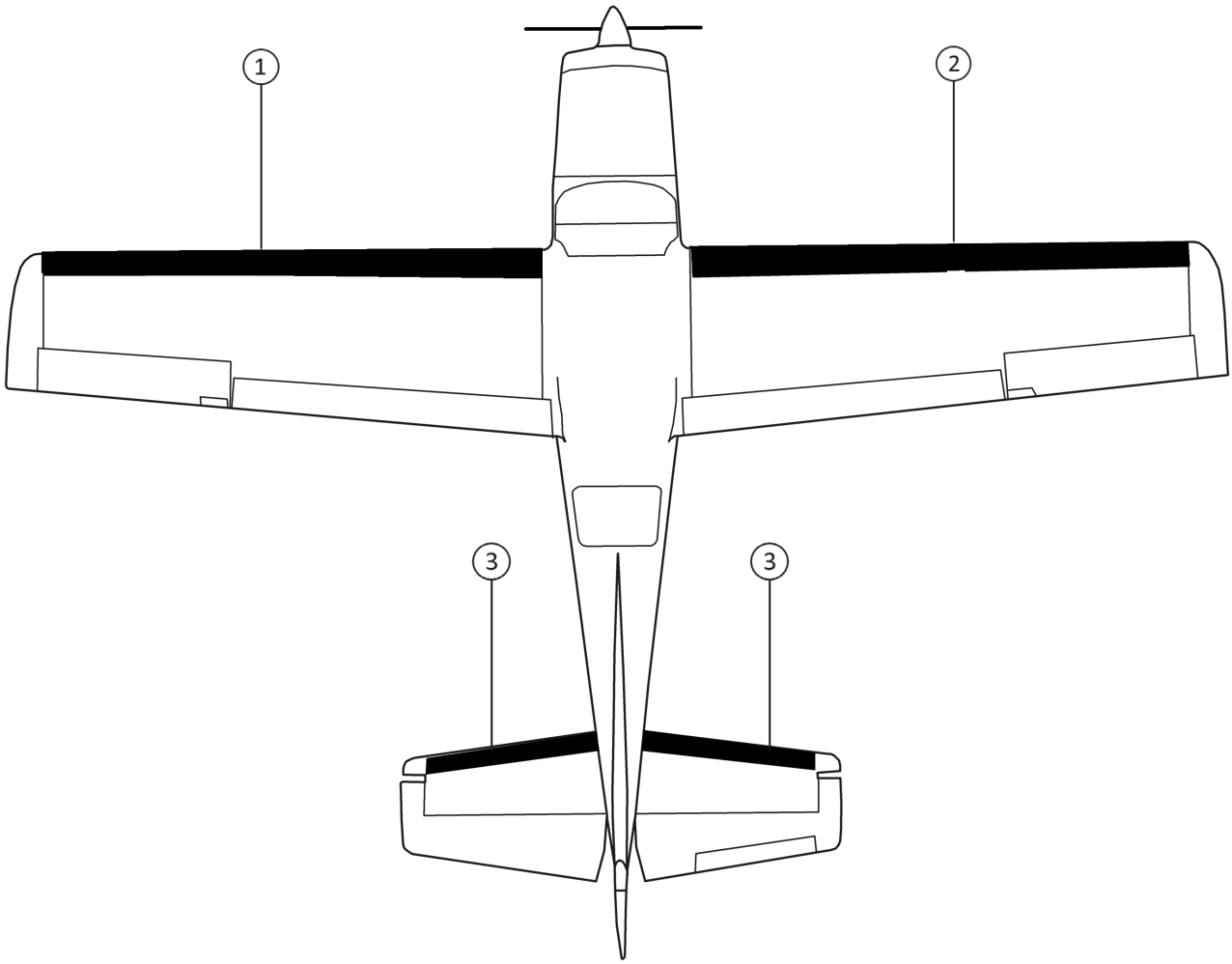

CESSNA 210K (CENTURION)

STANDARD DE-ICE BOOTS

POSITION ID	GOODRICH PART NUMBER	AIRCRAFT OEM P/N	DESCRIPTION	QTY PER AIRCRAFT	WT
1	23S-2038-6-1		WING LH DE-ICE BOOT	1	4.7
2	23S-2038-5-2		WING RH DE-ICE BOOT	1	4.8
3	23S-2038-3-1		HORIZONTAL STABILIZER LH/RH DE-ICE BOOT	2	1.5

OPTIONAL STANDARD DE-ICE BOOTS

POSITION ID	GOODRICH PART NUMBER	AIRCRAFT OEM P/N	DESCRIPTION	QTY PER AIRCRAFT	WT
1	23S-2038-5-1*		WING LH DE-ICE BOOT	1	4.3

*23S-2038-5-1 IS SHORTER TO ACCOMMODATE LANDING LIGHT OPTION

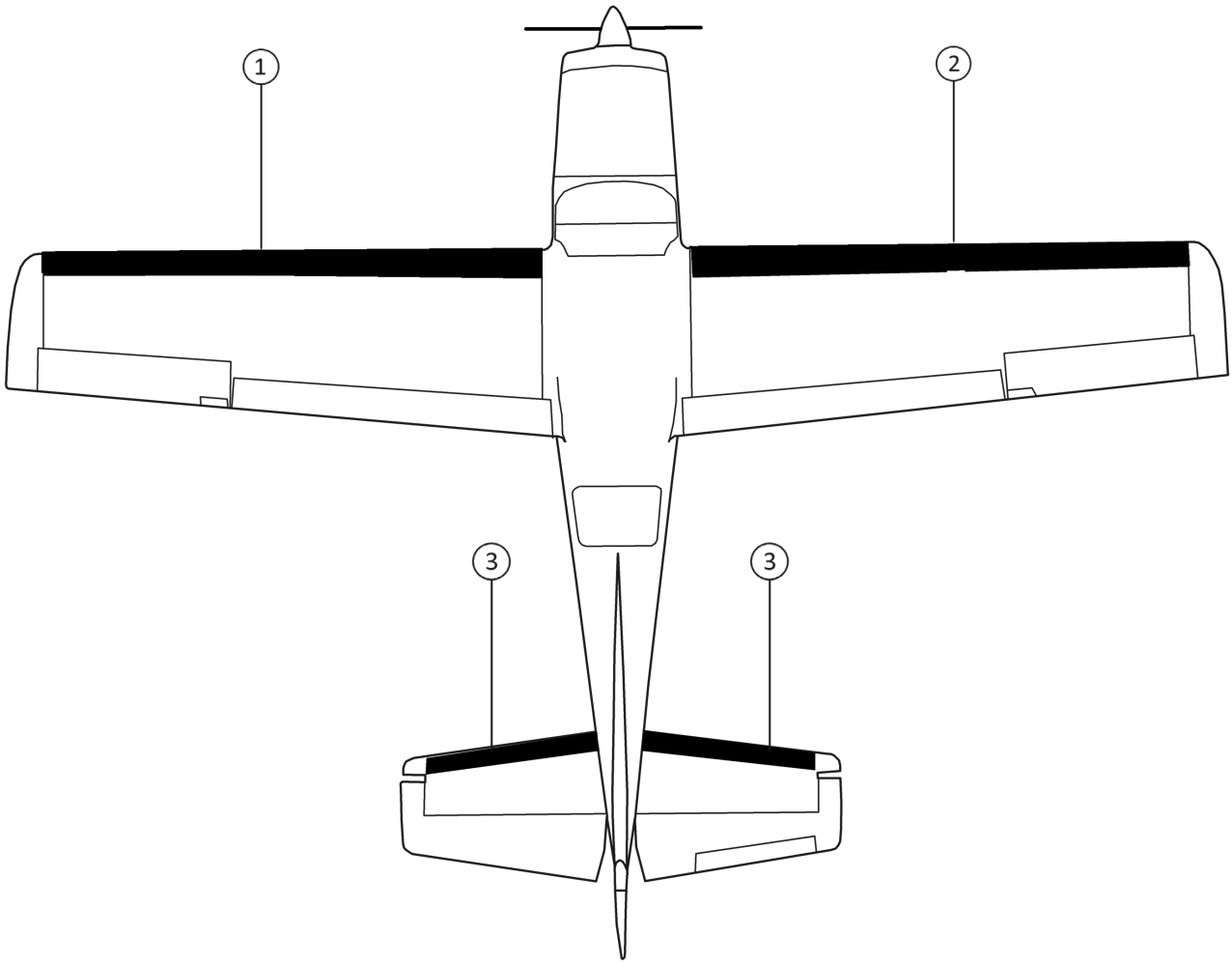

CESSNA 210L (CENTURION)

STANDARD DE-ICE BOOTS

POSITION ID	GOODRICH PART NUMBER	AIRCRAFT OEM P/N	DESCRIPTION	QTY PER AIRCRAFT	WT
1	23S-2038-6-1		WING LH DE-ICE BOOT	1	4.7
2	23S-2038-5-2		WING RH DE-ICE BOOT	1	4.8
3	23S-2038-3-1		HORIZONTAL STABILIZER LH/RH DE-ICE BOOT	2	1.5

OPTIONAL STANDARD DE-ICE BOOTS

POSITION ID	GOODRICH PART NUMBER	AIRCRAFT OEM P/N	DESCRIPTION	QTY PER AIRCRAFT	WT
1	23S-2038-5-1*		WING LH DE-ICE BOOT	1	4.3

*23S-2038-5-1 IS SHORTER TO ACCOMMODATE LANDING LIGHT OPTION

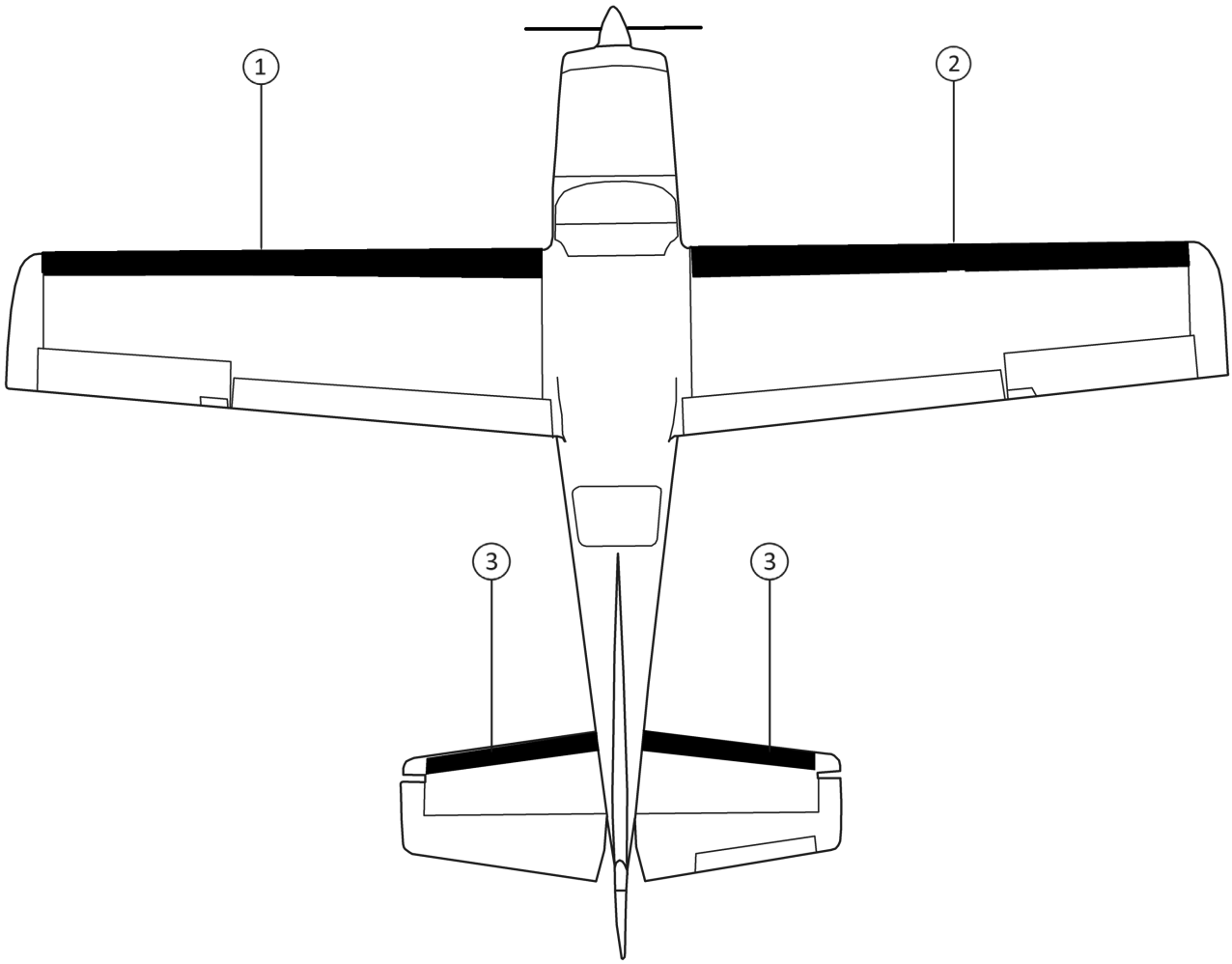

CESSNA 210M (CENTURION) S/N TO 21062968

STANDARD DE-ICE BOOTS

POSITION ID	GOODRICH PART NUMBER	AIRCRAFT OEM P/N	DESCRIPTION	QTY PER AIRCRAFT	WT
1	23S-2038-6-1		WING LH DE-ICE BOOT	1	4.7
2	23S-2038-5-2		WING RH DE-ICE BOOT	1	4.8
3	23S-2038-3-1		HORIZONTAL STABILIZER LH/RH DE-ICE BOOT	2	1.5

OPTIONAL STANDARD DE-ICE BOOTS

POSITION ID	GOODRICH PART NUMBER	AIRCRAFT OEM P/N	DESCRIPTION	QTY PER AIRCRAFT	WT
1	23S-2038-5-1*		WING LH DE-ICE BOOT	1	4.3

*23S-2038-5-1 IS SHORTER TO ACCOMMODATE LANDING LIGHT OPTION

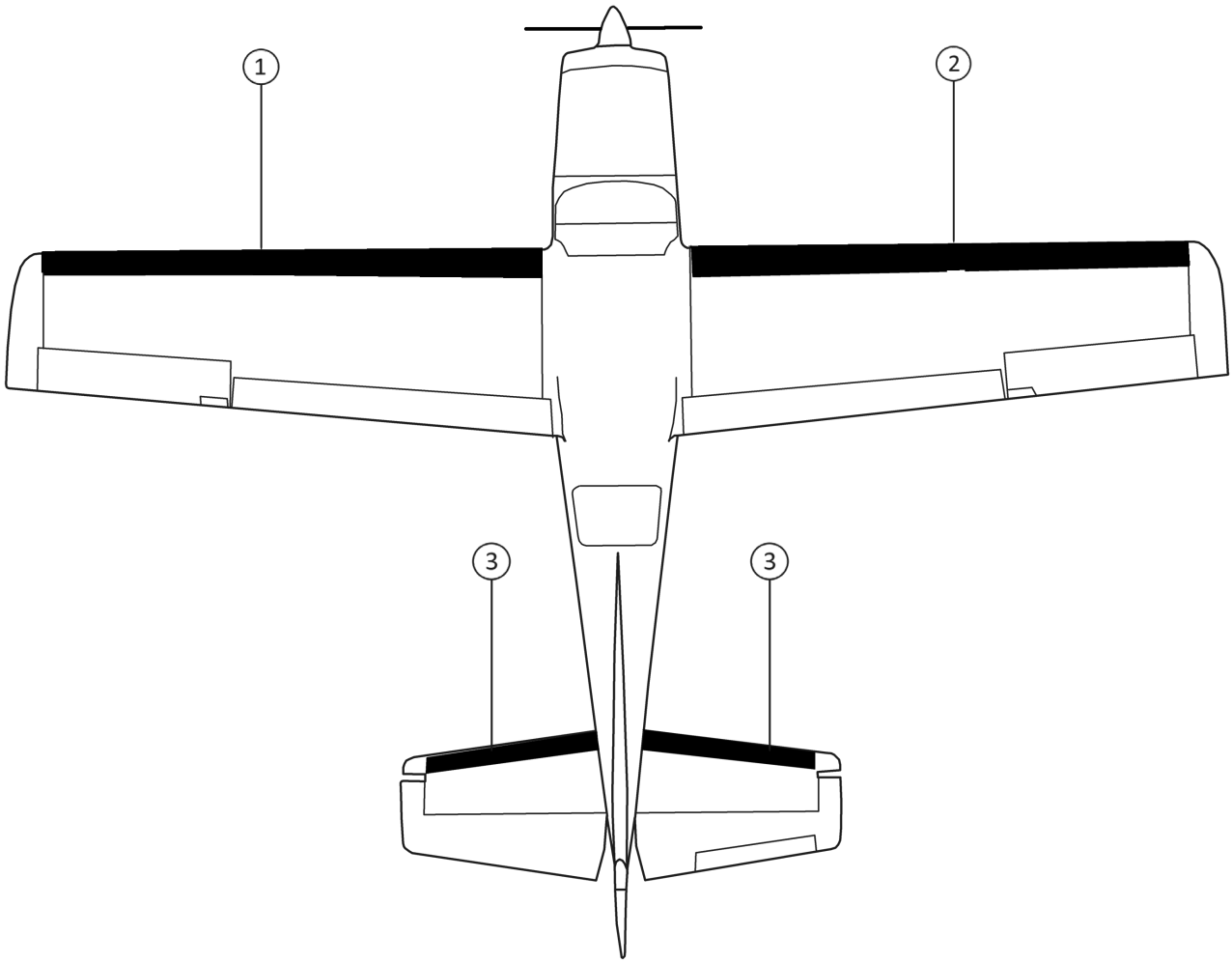

CESSNA 210N (CENTURION) S/N 21062969 THRU 21064772

STANDARD DE-ICE BOOTS

POSITION ID	GOODRICH PART NUMBER	AIRCRAFT OEM P/N	DESCRIPTION	QTY PER AIRCRAFT	WT
1	25S-5D5101-01		WING LH DE-ICE BOOT	1	4.3
2	25S-5D5101-02		WING RH DE-ICE BOOT	1	4.3
3	25S-5D5101-03		HORIZONTAL STABILIZER LH DE-ICE BOOT	1	1.3
4	25S-5D5101-04		HORIZONTAL STABILIZER RH DE-ICE BOOT	1	1.3
5	25S-5D5101-05		VERTICAL STABILIZER DE-ICE BOOT	1	0.6

FASTboot® DE-ICE BOOTS

POSITION ID	GOODRICH PART NUMBER	AIRCRAFT OEM P/N	DESCRIPTION	QTY PER AIRCRAFT	WT
1	P25S-5D5101-01		FASTBOOT® WING LH DE-ICE BOOT	1	4.3
2	P25S-5D5101-02		FASTBOOT® WING RH DE-ICE BOOT	1	4.3
3	P25S-5D5101-03		FASTBOOT® HORIZONTAL STABILIZER LH DE-ICE BOOT	1	1.3
4	P25S-5D5101-04		FASTBOOT® HORIZONTAL STABILIZER RH DE-ICE BOOT	1	1.3
5	P25S-5D5101-05		FASTBOOT® VERTICAL STABILIZER DE-ICE BOOT	1	0.6

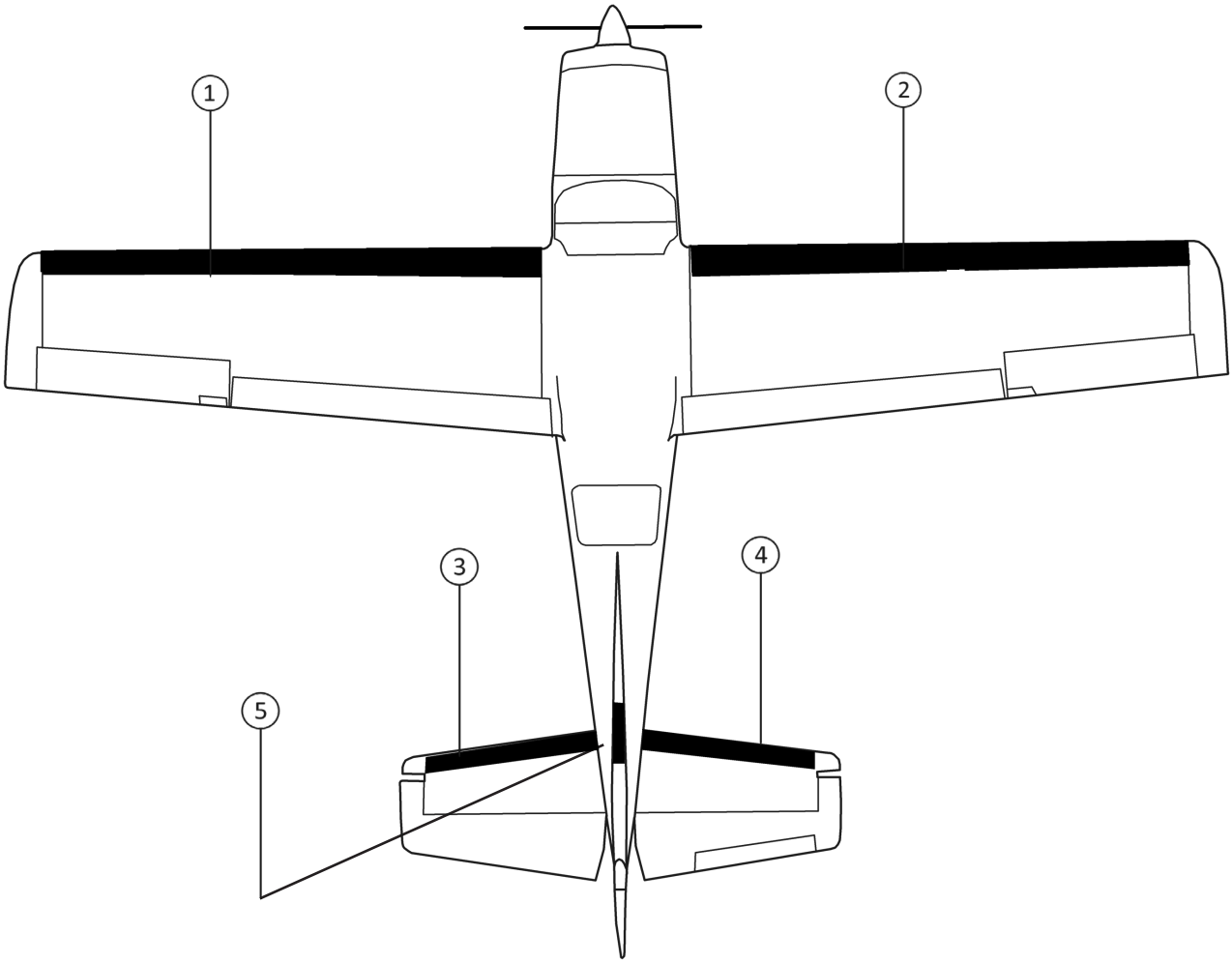

CESSNA 210R (CENTURION)

STANDARD DE-ICE BOOTS

POSITION ID	GOODRICH PART NUMBER	AIRCRAFT OEM P/N	DESCRIPTION	QTY PER AIRCRAFT	WT
1	25S-5D5170-01		WING LH DE-ICE BOOT	1	4.4
2	25S-5D5170-02		WING RH DE-ICE BOOT	1	4.4
3	25S-5D5170-07		WING TIP LH DE-ICE BOOT	1	0.3
4	25S-5D5170-08		WING TIP RH DE-ICE BOOT	1	0.3
5	25S-5D5170-03		HORIZONTAL STABILIZER LH DE-ICE BOOT	1	1.9
6	25S-5D5170-04		HORIZONTAL STABILIZER RH DE-ICE BOOT	1	1.9
7	25S-5D5101-05		VERTICAL STABILIZER DE-ICE BOOT	1	1.6

FASTboot® DE-ICE BOOTS

POSITION ID	GOODRICH PART NUMBER	AIRCRAFT OEM P/N	DESCRIPTION	QTY PER AIRCRAFT	WT
1	P25S-5D5170-01		FASTBOOT® WING LH DE-ICE BOOT	1	4.4
2	P25S-5D5170-02		FASTBOOT® WING RH DE-ICE BOOT	1	4.4
3	P25S-5D5170-07		FASTBOOT® WING TIP LH DE-ICE BOOT	1	0.3
4	P25S-5D5170-08		FASTBOOT® WING TIP RH DE-ICE BOOT	1	0.3
5	P25S-5D5170-03		FASTBOOT® HORIZONTAL STABILIZER LH DE-ICE BOOT	1	1.9
6	P25S-5D5170-04		FASTBOOT® HORIZONTAL STABILIZER RH DE-ICE BOOT	1	1.9
7	P25S-5D5101-05		FASTBOOT® VERTICAL STABILIZER DE-ICE BOOT	1	1.6

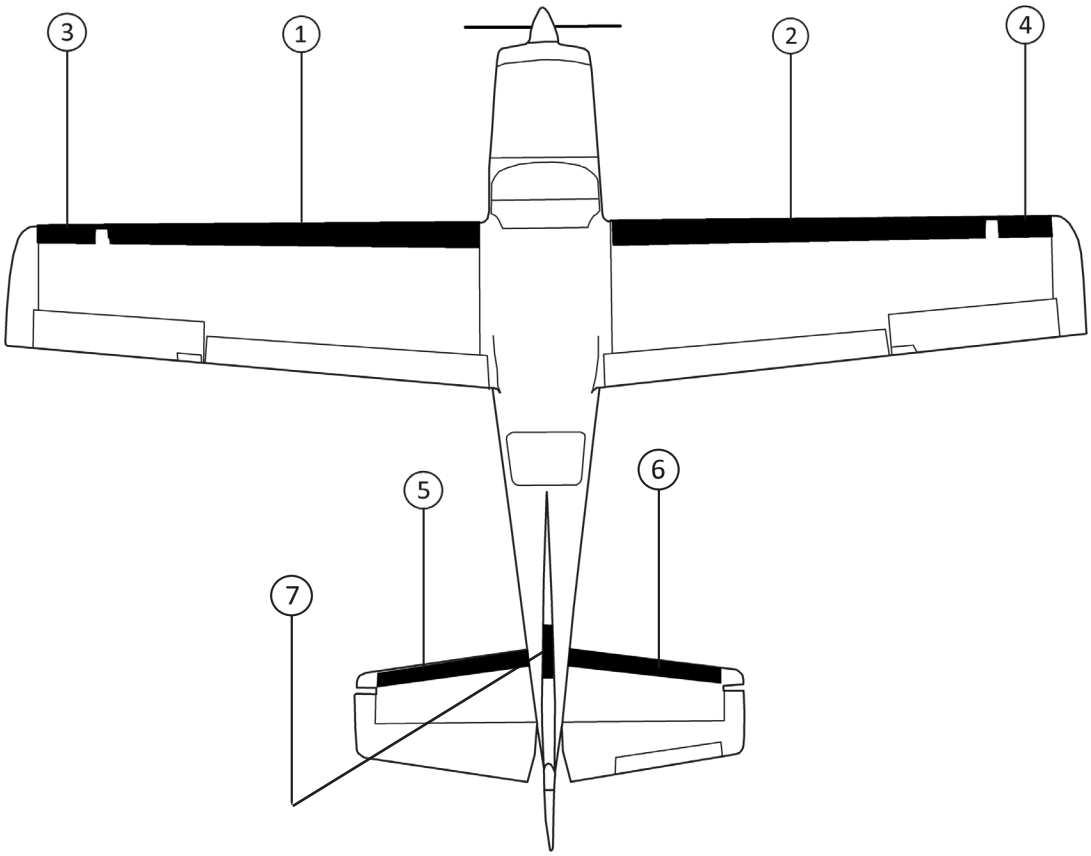

CESSNA P210N (PRESSURIZED CENTURION) S/N P21000001 THRU P21000120

STANDARD DE-ICE BOOTS

POSITION ID	GOODRICH PART NUMBER	AIRCRAFT OEM P/N	DESCRIPTION	QTY PER AIRCRAFT	WT
1	23S-2038-6-1		WING LH DE-ICE BOOT	1	4.7
2	23S-2038-5-2		WING RH DE-ICE BOOT	1	4.8
3	23S-2038-3-1		HORIZONTAL STABILIZER LH/RH DE-ICE BOOT	2	1.5

OPTIONAL STANDARD DE-ICE BOOTS

POSITION ID	GOODRICH PART NUMBER	AIRCRAFT OEM P/N	DESCRIPTION	QTY PER AIRCRAFT	WT
1	23S-2038-5-1*		WING LH DE-ICE BOOT	1	4.3

*23S-2038-5-1 IS SHORTER TO ACCOMMODATE LANDING LIGHT OPTION

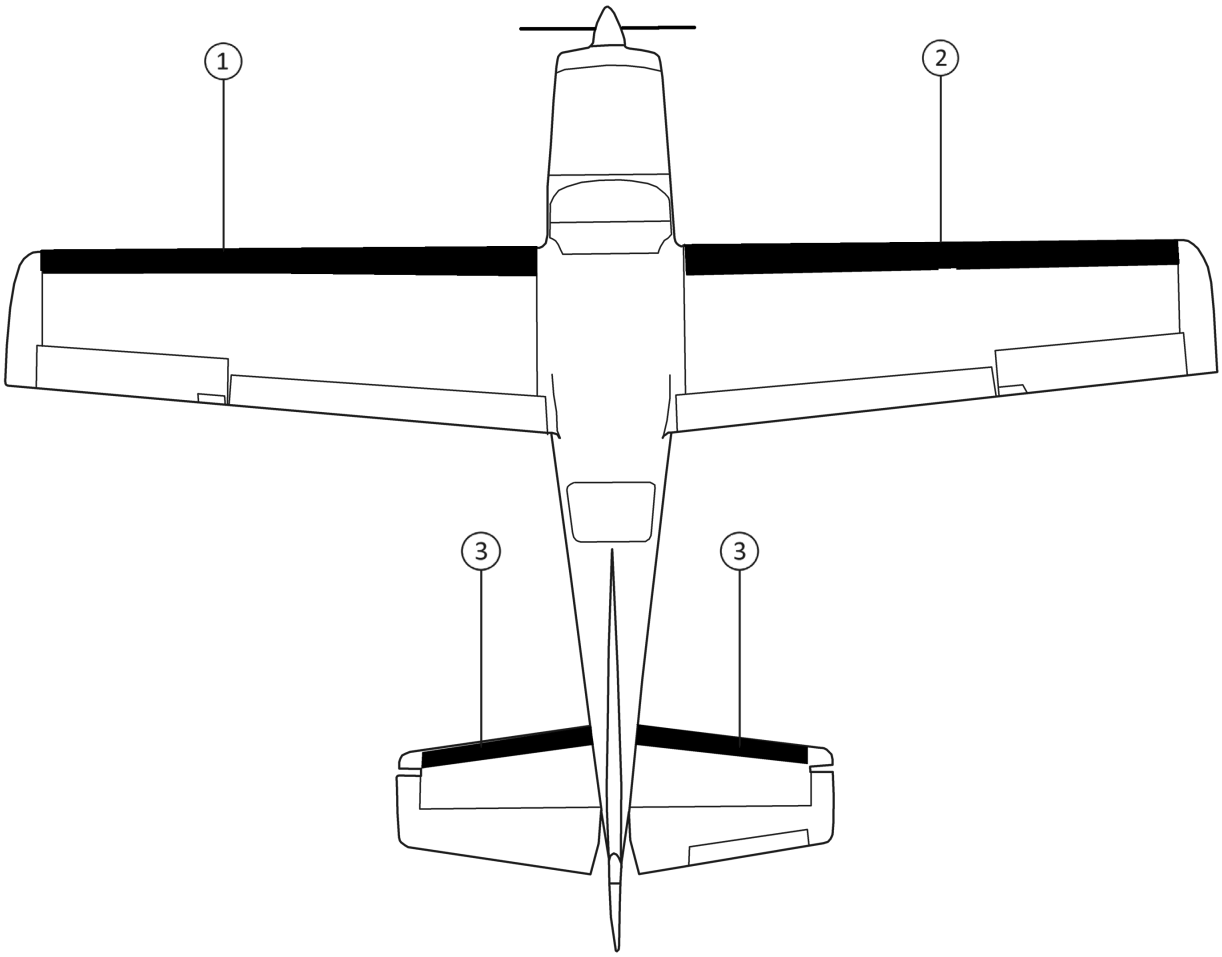

CESSNA P210N (PRESSURIZED CENTURION) S/N P21000121 THRU P21000834

STANDARD DE-ICE BOOTS

POSITION ID	GOODRICH PART NUMBER	AIRCRAFT OEM P/N	DESCRIPTION	QTY PER AIRCRAFT	WT
1	25S-5D5101-01		WING LH DE-ICE BOOT	1	4.3
2	25S-5D5101-02		WING RH DE-ICE BOOT	1	4.3
3	25S-5D5101-03		HORIZONTAL STABILIZER LH DE-ICE BOOT	1	1.3
4	25S-5D5101-04		HORIZONTAL STABILIZER RH DE-ICE BOOT	1	1.3
5	25S-5D5101-05		VERTICAL STABILIZER DE-ICE BOOT	1	0.6

FASTboot® DE-ICE BOOTS

POSITION ID	GOODRICH PART NUMBER	AIRCRAFT OEM P/N	DESCRIPTION	QTY PER AIRCRAFT	WT
1	P25S-5D5101-01		FASTBOOT® WING LH DE-ICE BOOT	1	4.3
2	P25S-5D5101-02		FASTBOOT® WING RH DE-ICE BOOT	1	4.3
3	P25S-5D5101-03		FASTBOOT® HORIZONTAL STABILIZER LH DE-ICE BOOT	1	1.3
4	P25S-5D5101-04		FASTBOOT® HORIZONTAL STABILIZER RH DE-ICE BOOT	1	1.3
5	P25S-5D5101-05		FASTBOOT® VERTICAL STABILIZER DE-ICE BOOT	1	0.6

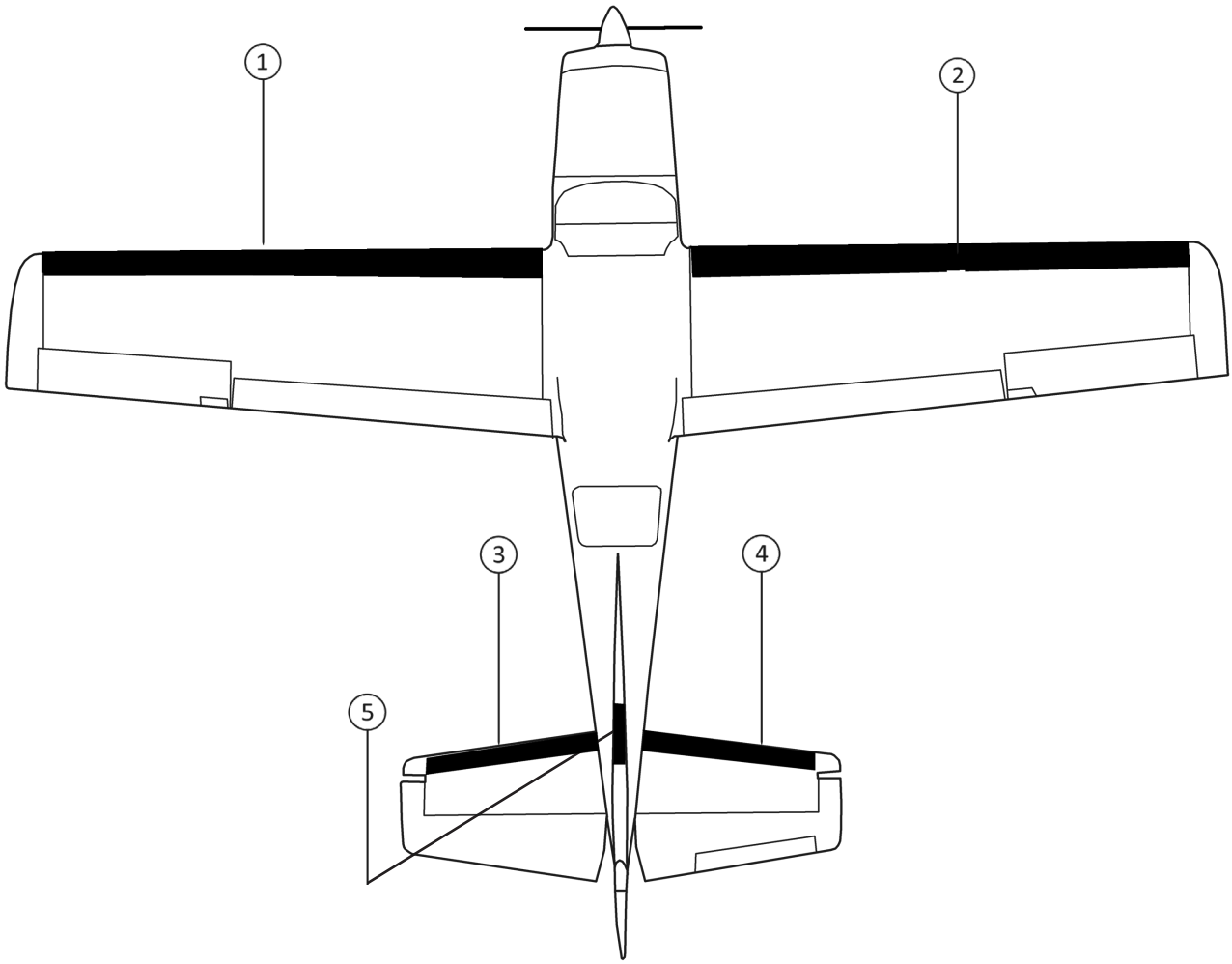

CESSNA P210R (PRESSURIZED CENTURION)

STANDARD DE-ICE BOOTS

POSITION ID	GOODRICH PART NUMBER	AIRCRAFT OEM P/N	DESCRIPTION	QTY PER AIRCRAFT	WT
1	25S-5D5170-01		WING LH DE-ICE BOOT	1	4.4
2	25S-5D5170-02		WING RH DE-ICE BOOT	1	4.4
3	25S-5D5170-07		WING TIP LH DE-ICE BOOT	1	0.3
4	25S-5D5170-08		WING TIP RH DE-ICE BOOT	1	0.3
5	25S-5D5170-03		HORIZONTAL STABILIZER LH DE-ICE BOOT	1	1.9
6	25S-5D5170-04		HORIZONTAL STABILIZER RH DE-ICE BOOT	1	1.9
7	25S-5D5101-05		VERTICAL STABILIZER DE-ICE BOOT	1	0.6

FASTboot® DE-ICE BOOTS

POSITION ID	GOODRICH PART NUMBER	AIRCRAFT OEM P/N	DESCRIPTION	QTY PER AIRCRAFT	WT
1	P25S-5D5170-01		FASTBOOT® WING LH DE-ICE BOOT	1	4.4
2	P25S-5D5170-02		FASTBOOT® WING RH DE-ICE BOOT	1	4.4
3	P25S-5D5170-07		FASTBOOT® WING TIP LH DE-ICE BOOT	1	0.3
4	P25S-5D5170-08		FASTBOOT® WING TIP RH DE-ICE BOOT	1	0.3
5	P25S-5D5170-03		FASTBOOT® HORIZONTAL STABILIZER LH DE-ICE BOOT	1	1.9
6	P25S-5D5170-04		FASTBOOT® HORIZONTAL STABILIZER RH DE-ICE BOOT	1	1.9
7	P25S-5D5101-05		FASTBOOT® VERTICAL STABILIZER DE-ICE BOOT	1	0.6

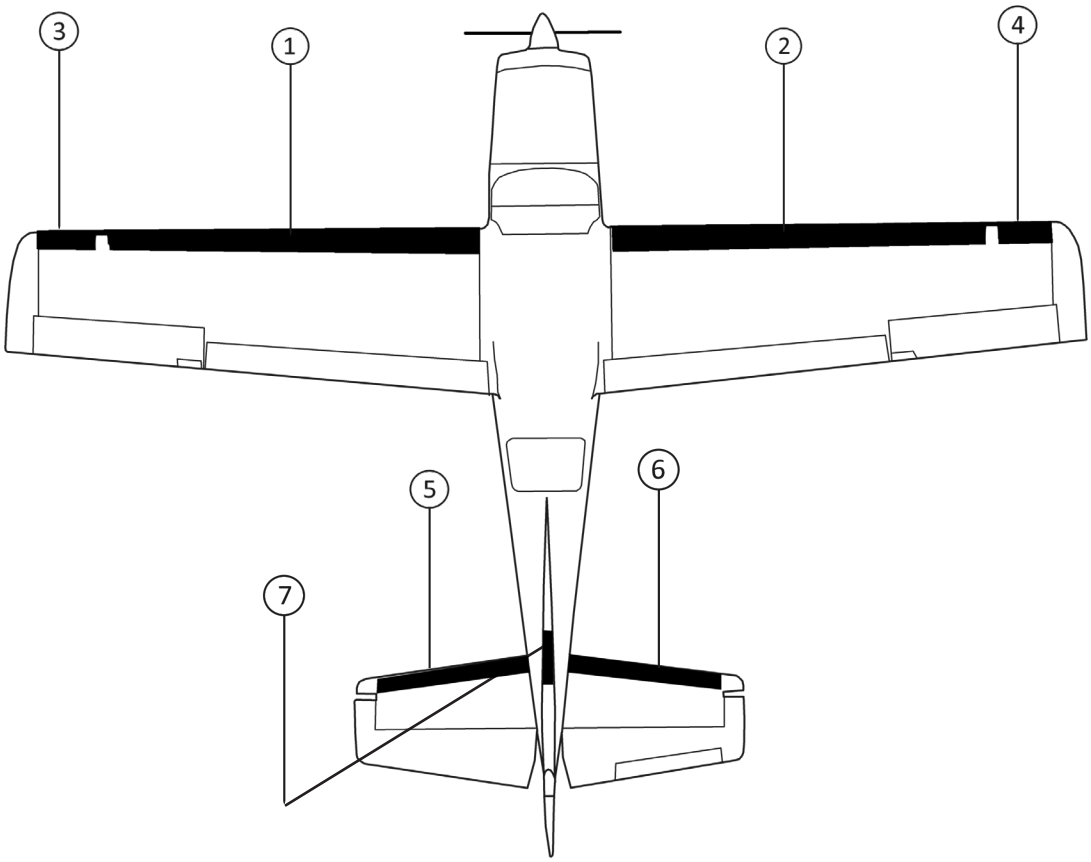

CESSNA T210F (TURBO CENTURION)

STANDARD DE-ICE BOOTS

POSITION ID	GOODRICH PART NUMBER	AIRCRAFT OEM P/N	DESCRIPTION	QTY PER AIRCRAFT	WT
1	23S-2038-6-1		WING LH DE-ICE BOOT	1	4.7
2	23S-2038-5-2		WING RH DE-ICE BOOT	1	4.8
3	23S-2038-3-1		HORIZONTAL STABILIZER LH/RH DE-ICE BOOT	2	1.5

OPTIONAL STANDARD DE-ICE BOOTS

POSITION ID	GOODRICH PART NUMBER	AIRCRAFT OEM P/N	DESCRIPTION	QTY PER AIRCRAFT	WT
1	23S-2038-5-1*		WING LH DE-ICE BOOT	1	4.3

*23S-2038-5-1 IS SHORTER TO ACCOMMODATE LANDING LIGHT OPTION

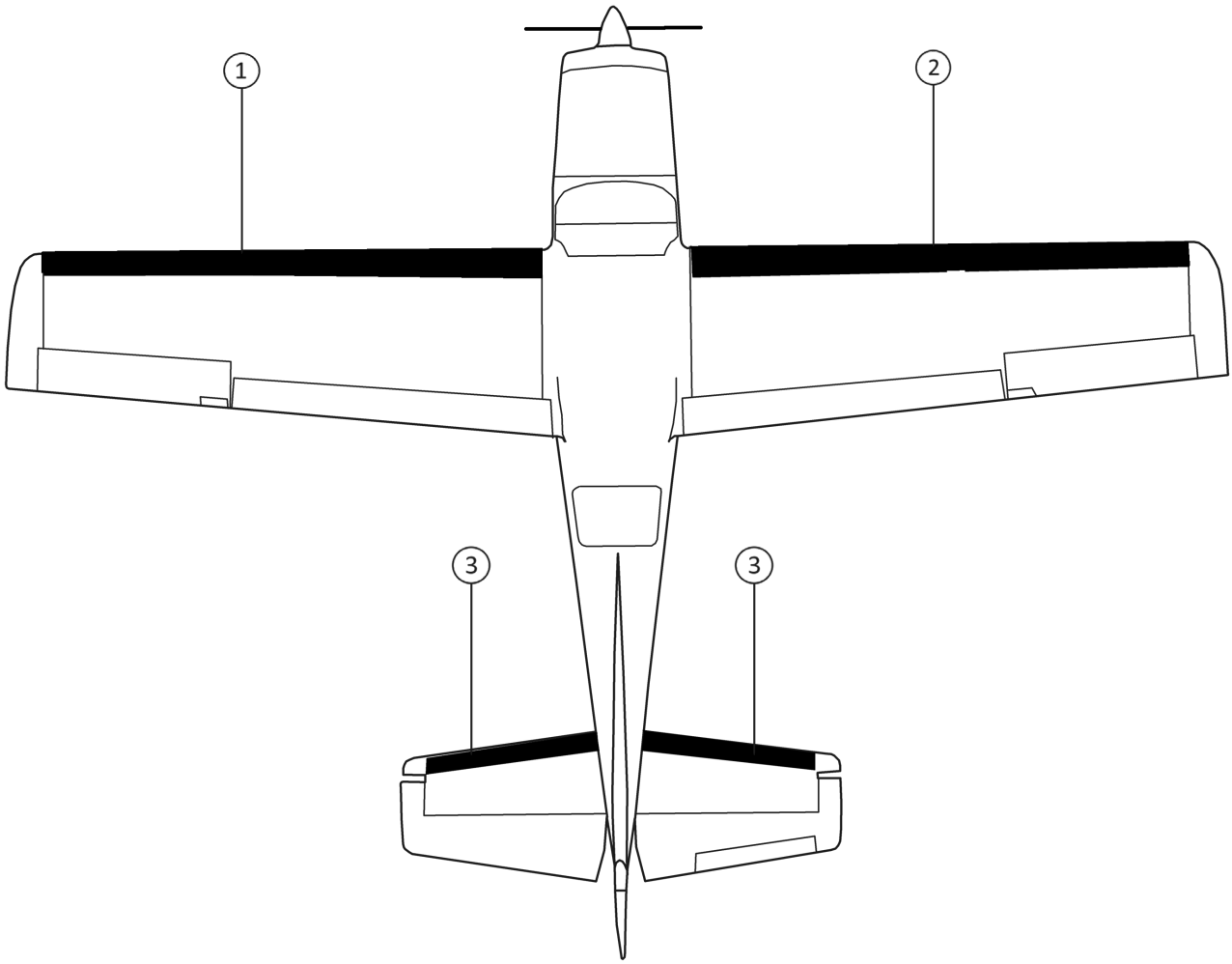

CESSNA T210G (TURBO CENTURION)

STANDARD DE-ICE BOOTS

POSITION ID	GOODRICH PART NUMBER	AIRCRAFT OEM P/N	DESCRIPTION	QTY PER AIRCRAFT	WT
1	23S-2038-6-1		WING LH DE-ICE BOOT	1	4.7
2	23S-2038-5-2		WING RH DE-ICE BOOT	1	4.8
3	23S-2038-3-1		HORIZONTAL STABILIZER LH/RH DE-ICE BOOT	2	1.5

OPTIONAL STANDARD DE-ICE BOOTS

POSITION ID	GOODRICH PART NUMBER	AIRCRAFT OEM P/N	DESCRIPTION	QTY PER AIRCRAFT	WT
1	23S-2038-5-1*		WING LH DE-ICE BOOT	1	4.3

*23S-2038-5-1 IS SHORTER TO ACCOMMODATE LANDING LIGHT OPTION

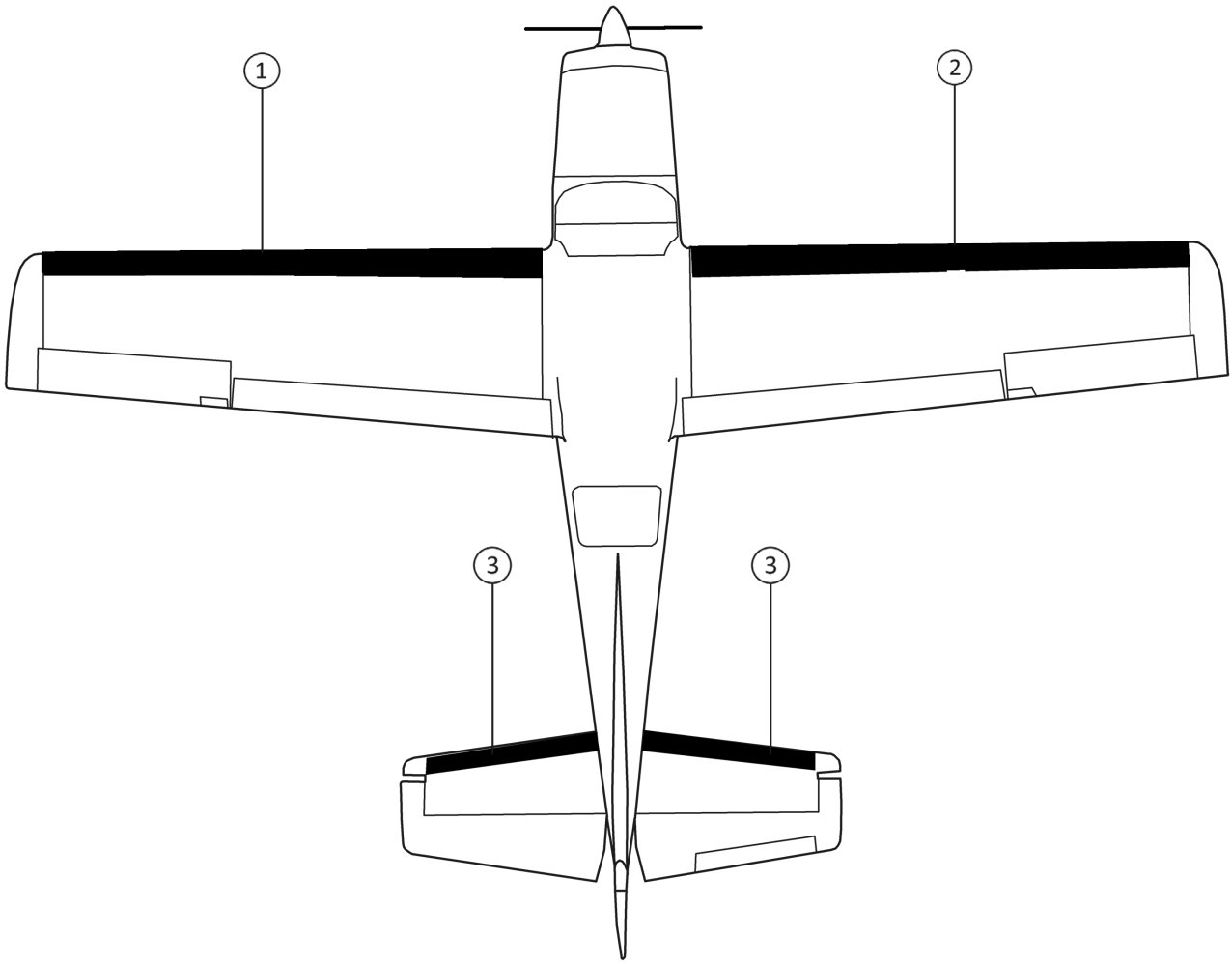

CESSNA T210H (TURBO CENTURION)

STANDARD DE-ICE BOOTS

POSITION ID	GOODRICH PART NUMBER	AIRCRAFT OEM P/N	DESCRIPTION	QTY PER AIRCRAFT	WT
1	23S-2038-6-1		WING LH DE-ICE BOOT	1	4.7
2	23S-2038-5-2		WING RH DE-ICE BOOT	1	4.8
3	23S-2038-3-1		HORIZONTAL STABILIZER LH/RH DE-ICE BOOT	2	1.5

OPTIONAL STANDARD DE-ICE BOOTS

POSITION ID	GOODRICH PART NUMBER	AIRCRAFT OEM P/N	DESCRIPTION	QTY PER AIRCRAFT	WT
1	23S-2038-5-1*		WING LH DE-ICE BOOT	1	4.3

*23S-2038-5-1 IS SHORTER TO ACCOMMODATE LANDING LIGHT OPTION

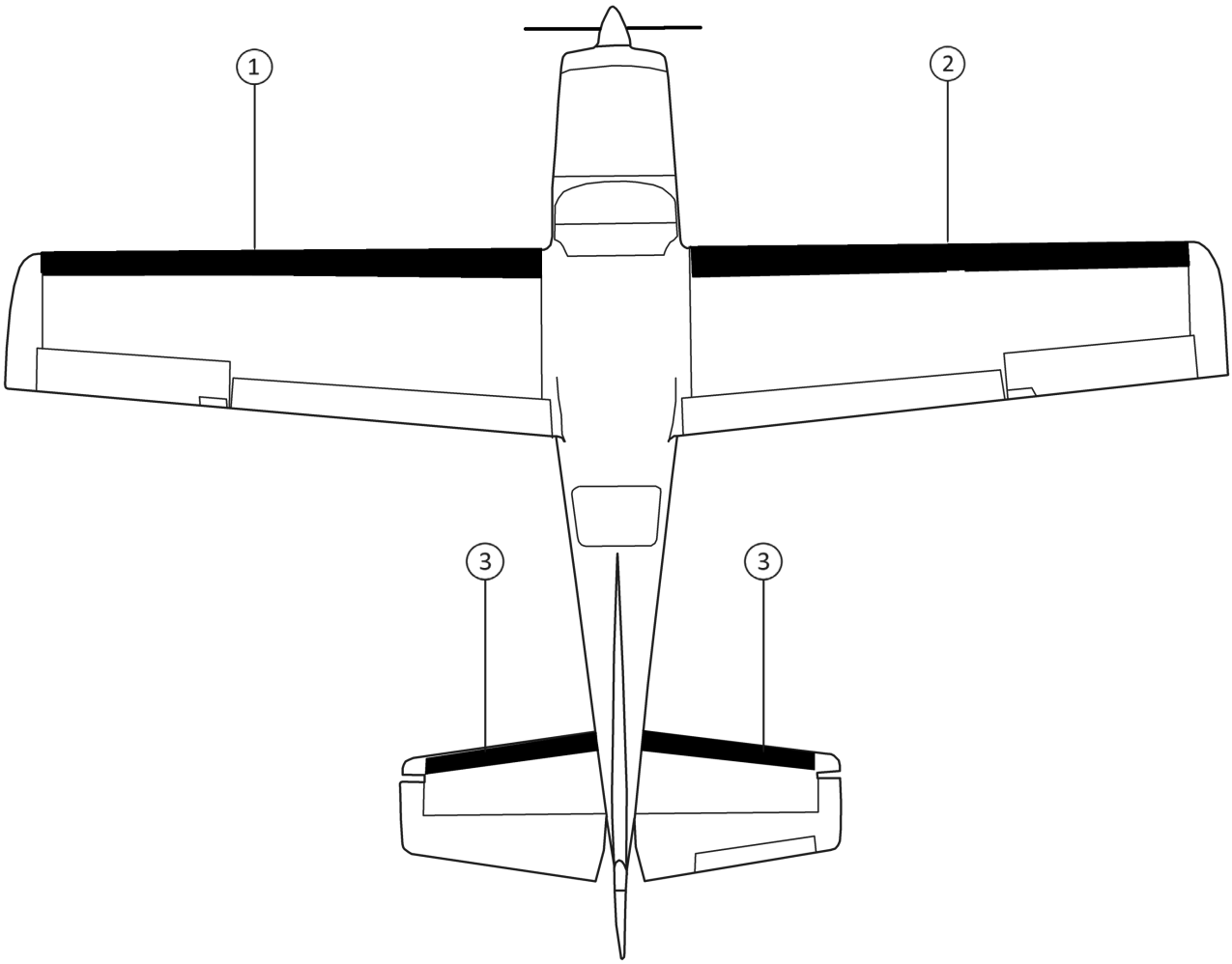

CESSNA T210J (TURBO CENTURION)

STANDARD DE-ICE BOOTS

POSITION ID	GOODRICH PART NUMBER	AIRCRAFT OEM P/N	DESCRIPTION	QTY PER AIRCRAFT	WT
1	23S-2038-6-1		WING LH DE-ICE BOOT	1	4.7
2	23S-2038-5-2		WING RH DE-ICE BOOT	1	4.8
3	23S-2038-3-1		HORIZONTAL STABILIZER LH/RH DE-ICE BOOT	2	1.5

OPTIONAL STANDARD DE-ICE BOOTS

POSITION ID	GOODRICH PART NUMBER	AIRCRAFT OEM P/N	DESCRIPTION	QTY PER AIRCRAFT	WT
1	23S-2038-5-1*		WING LH DE-ICE BOOT	1	4.3

*23S-2038-5-1 IS SHORTER TO ACCOMMODATE LANDING LIGHT OPTION

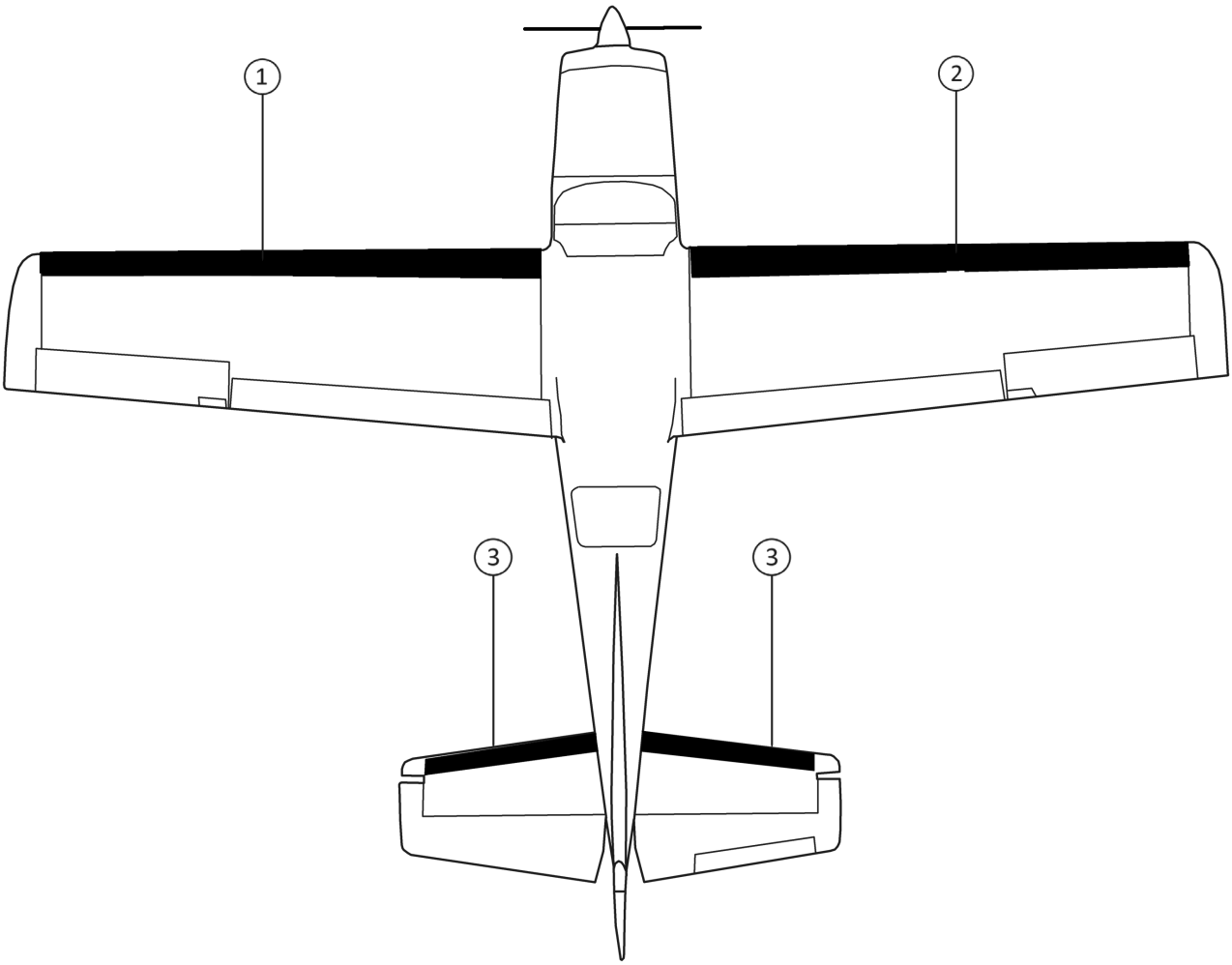

CESSNA T210K (TURBO CENTURION)

STANDARD DE-ICE BOOTS

POSITION ID	GOODRICH PART NUMBER	AIRCRAFT OEM P/N	DESCRIPTION	QTY PER AIRCRAFT	WT
1	23S-2038-6-1		WING LH DE-ICE BOOT	1	4.7
2	23S-2038-5-2		WING RH DE-ICE BOOT	1	4.8
3	23S-2038-3-1		HORIZONTAL STABILIZER LH/RH DE-ICE BOOT	2	1.5

OPTIONAL STANDARD DE-ICE BOOTS

POSITION ID	GOODRICH PART NUMBER	AIRCRAFT OEM P/N	DESCRIPTION	QTY PER AIRCRAFT	WT
1	23S-2038-5-1*		WING LH DE-ICE BOOT	1	4.3

*23S-2038-5-1 IS SHORTER TO ACCOMMODATE LANDING LIGHT OPTION

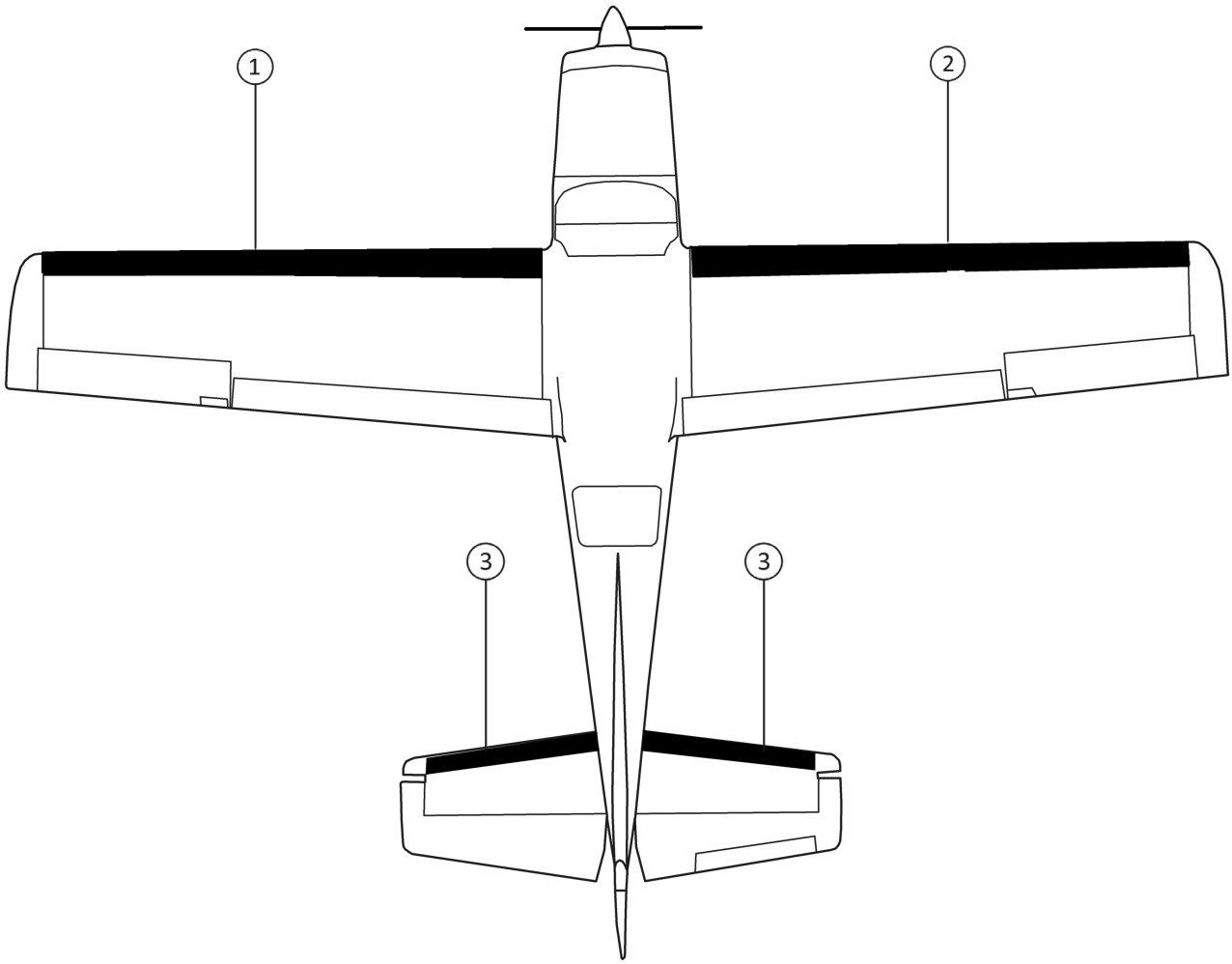

CESSNA T210L (TURBO CENTURION)

STANDARD DE-ICE BOOTS

POSITION ID	GOODRICH PART NUMBER	AIRCRAFT OEM P/N	DESCRIPTION	QTY PER AIRCRAFT	WT
1	23S-2038-6-1		WING LH DE-ICE BOOT	1	4.7
2	23S-2038-5-2		WING RH DE-ICE BOOT	1	4.8
3	23S-2038-3-1		HORIZONTAL STABILIZER LH/RH DE-ICE BOOT	2	1.5

OPTIONAL STANDARD DE-ICE BOOTS

POSITION ID	GOODRICH PART NUMBER	AIRCRAFT OEM P/N	DESCRIPTION	QTY PER AIRCRAFT	WT
1	23S-2038-5-1*		WING LH DE-ICE BOOT	1	4.3

*23S-2038-5-1 IS SHORTER TO ACCOMMODATE LANDING LIGHT OPTION

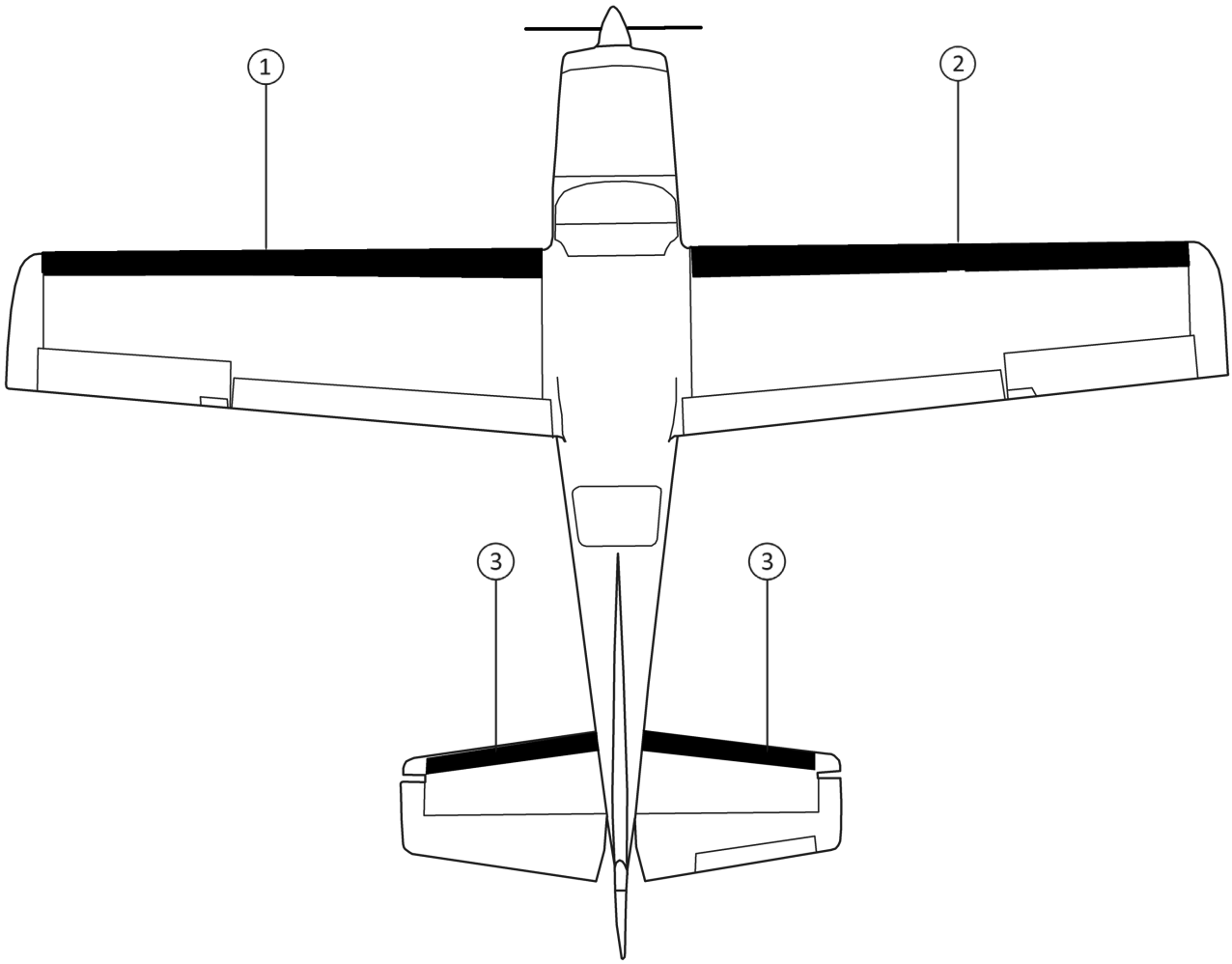

CESSNA T210M (TURBO CENTURION)

STANDARD DE-ICE BOOTS

POSITION ID	GOODRICH PART NUMBER	AIRCRAFT OEM P/N	DESCRIPTION	QTY PER AIRCRAFT	WT
1	23S-2038-6-1		WING LH DE-ICE BOOT	1	4.7
2	23S-2038-5-2		WING RH DE-ICE BOOT	1	4.8
3	23S-2038-3-1		HORIZONTAL STABILIZER LH/RH DE-ICE BOOT	2	1.5

OPTIONAL STANDARD DE-ICE BOOTS

POSITION ID	GOODRICH PART NUMBER	AIRCRAFT OEM P/N	DESCRIPTION	QTY PER AIRCRAFT	WT
1	23S-2038-5-1*		WING LH DE-ICE BOOT	1	4.3

*23S-2038-5-1 IS SHORTER TO ACCOMMODATE LANDING LIGHT OPTION

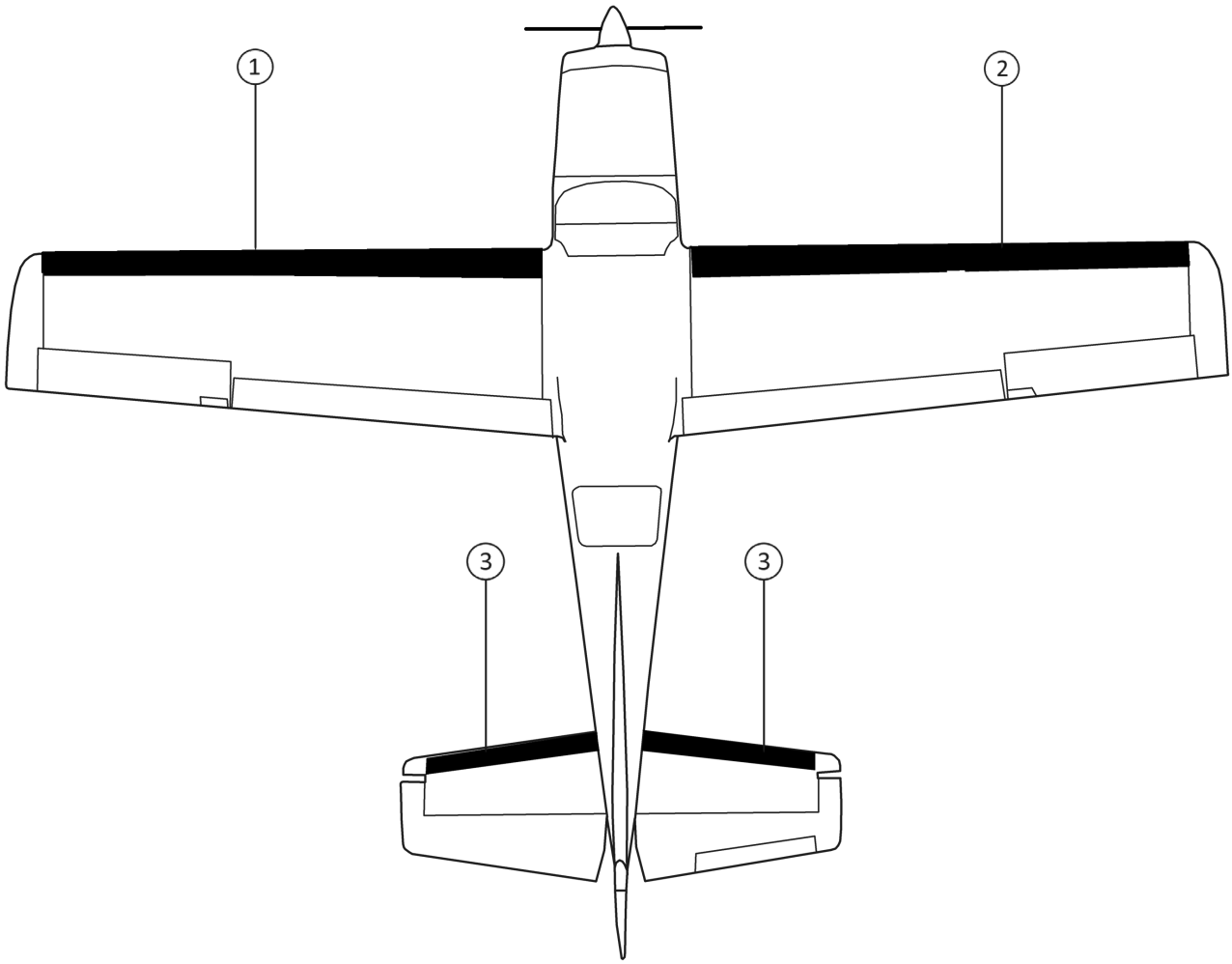

CESSNA T210M (TURBO CENTURION) S/N TO 21062968

STANDARD DE-ICE BOOTS

POSITION ID	GOODRICH PART NUMBER	AIRCRAFT OEM P/N	DESCRIPTION	QTY PER AIRCRAFT	WT
1	23S-2038-6-1		WING LH DE-ICE BOOT	1	4.7
2	23S-2038-5-2		WING RH DE-ICE BOOT	1	4.8
3	23S-2038-3-1		HORIZONTAL STABILIZER LH/RH DE-ICE BOOT	2	1.5

OPTIONAL STANDARD DE-ICE BOOTS

POSITION ID	GOODRICH PART NUMBER	AIRCRAFT OEM P/N	DESCRIPTION	QTY PER AIRCRAFT	WT
1	23S-2038-5-1*		WING LH DE-ICE BOOT	1	4.3

*23S-2038-5-1 IS SHORTER TO ACCOMMODATE LANDING LIGHT OPTION

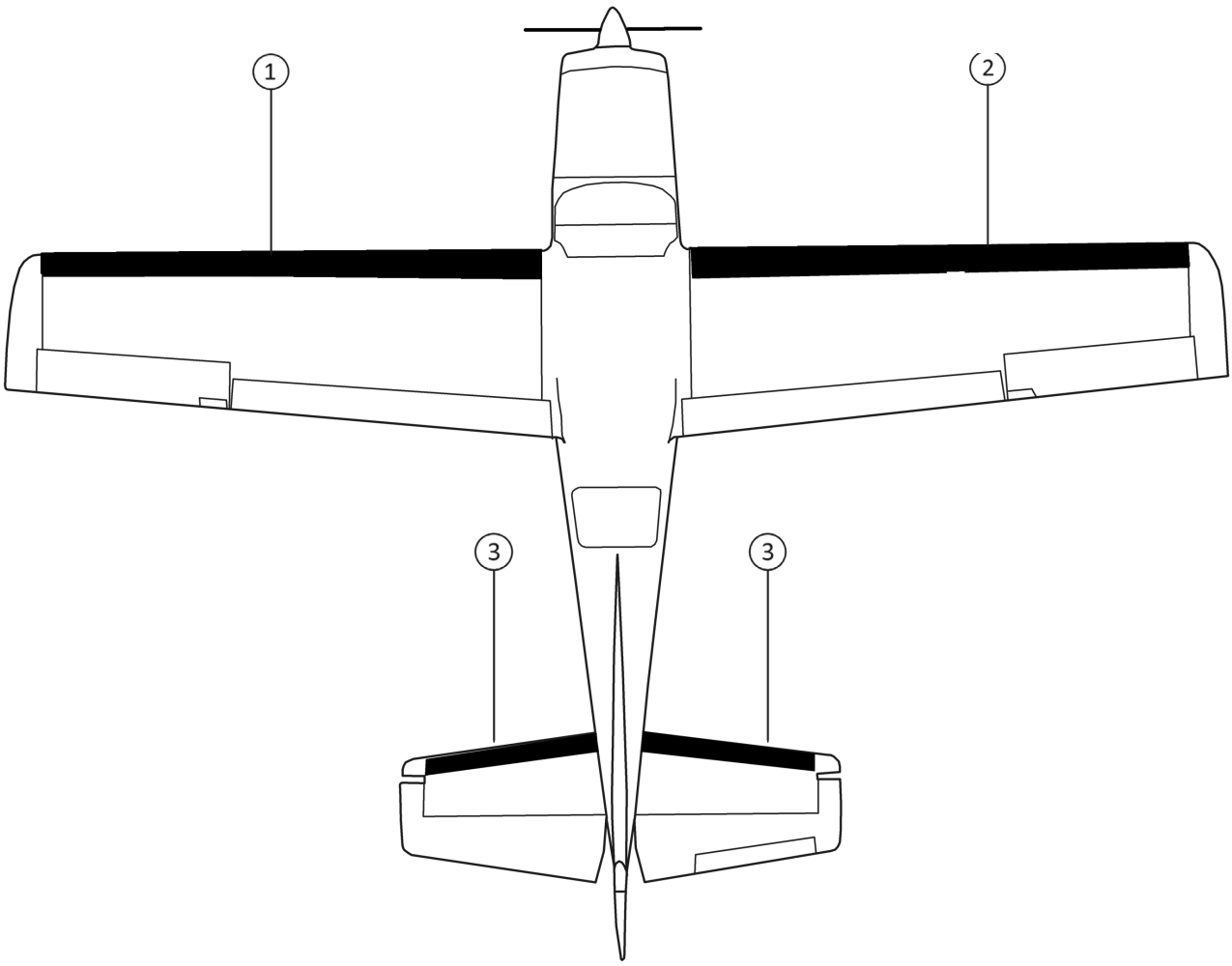

CESSNA T210M (TURBO CENTURION) S/N TO 21062968

CESSNA T210N (TURBO CENTURION)

STANDARD DE-ICE BOOTS

POSITION ID	GOODRICH PART NUMBER	AIRCRAFT OEM P/N	DESCRIPTION	QTY PER AIRCRAFT	WT
1	25S-5D5101-01		WING LH DE-ICE BOOT	1	4.3
2	25S-5D5101-02		WING RH DE-ICE BOOT	1	4.3
3	25S-5D5101-03		HORIZONTAL STABILIZER LH DE-ICE BOOT	1	1.3
4	25S-5D5101-04		HORIZONTAL STABILIZER RH DE-ICE BOOT	1	1.3
5	25S-5D5101-05		VERTICAL STABILIZER DE-ICE BOOT	1	0.6

FASTboot® DE-ICE BOOTS

POSITION ID	GOODRICH PART NUMBER	AIRCRAFT OEM P/N	DESCRIPTION	QTY PER AIRCRAFT	WT
1	P25S-5D5101-01		FASTBOOT® WING LH DE-ICE BOOT	1	4.3
2	P25S-5D5101-02		FASTBOOT® WING RH DE-ICE BOOT	1	4.3
3	P25S-5D5101-03		FASTBOOT® HORIZONTAL STABILIZER LH DE-ICE BOOT	1	1.3
4	P25S-5D5101-04		FASTBOOT® HORIZONTAL STABILIZER RH DE-ICE BOOT	1	1.3
5	P25S-5D5101-05		FASTBOOT® VERTICAL STABILIZER DE-ICE BOOT	1	0.6

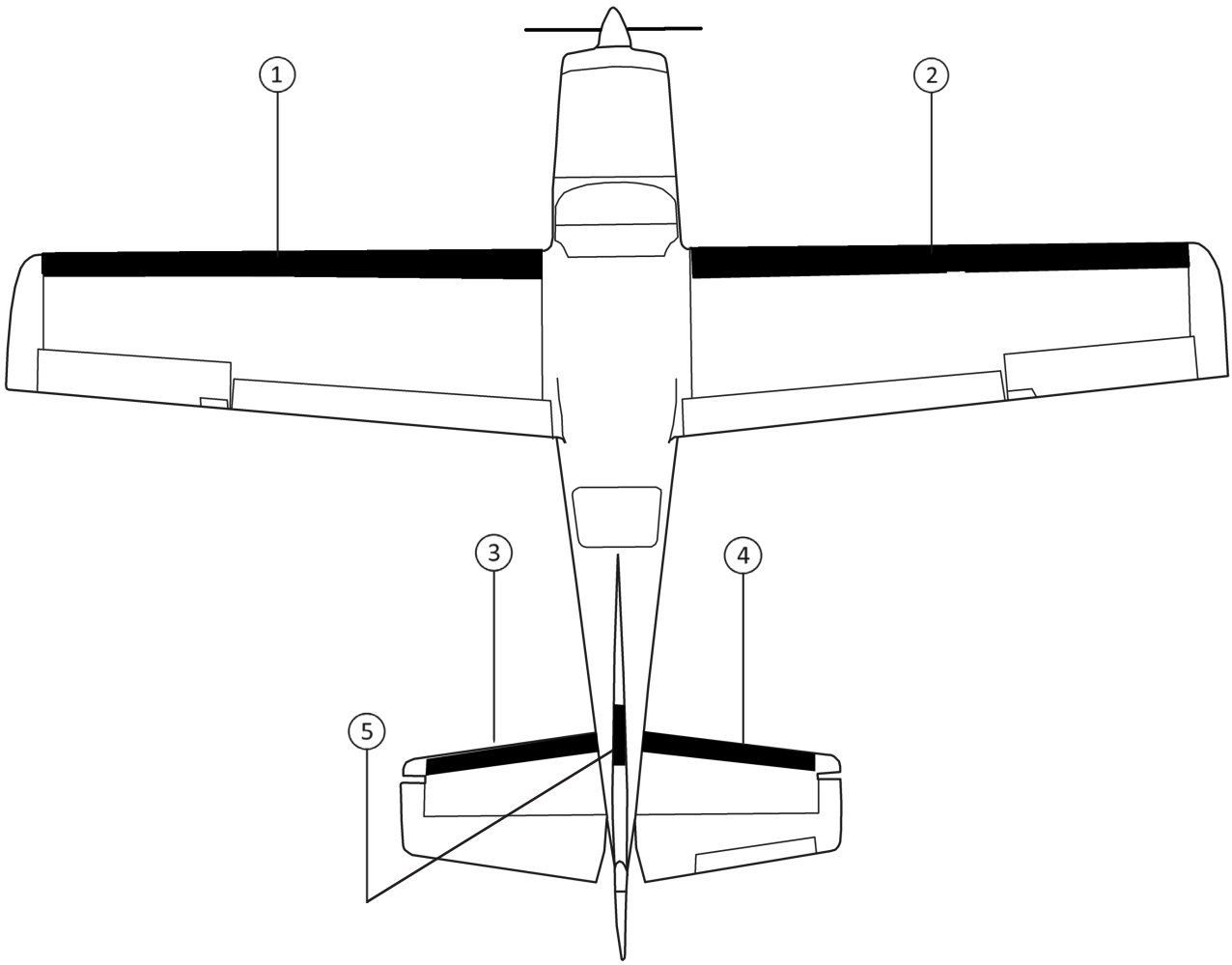

CESSNA T210R (TURBO CENTURION)

STANDARD DE-ICE BOOTS

POSITION ID	GOODRICH PART NUMBER	AIRCRAFT OEM P/N	DESCRIPTION	QTY PER AIRCRAFT	WT
1	25S-5D5170-01		WING LH DE-ICE BOOT	1	4.4
2	25S-5D5170-02		WING RH DE-ICE BOOT	1	4.4
3	25S-5D5170-07		WING TIP LH DE-ICE BOOT	1	0.3
4	25S-5D5170-08		WING TIP RH DE-ICE BOOT	1	0.3
5	25S-5D5170-03		HORIZONTAL STABILIZER LH DE-ICE BOOT	1	1.9
6	25S-5D5170-04		HORIZONTAL STABILIZER RH DE-ICE BOOT	1	1.9
7	25S-5D5101-05		VERTICAL STABILIZER DE-ICE BOOT	1	0.6

FASTboot® DE-ICE BOOTS

POSITION ID	GOODRICH PART NUMBER	AIRCRAFT OEM P/N	DESCRIPTION	QTY PER AIRCRAFT	WT
1	P25S-5D5170-01		FASTBOOT® WING LH DE-ICE BOOT	1	4.4
2	P25S-5D5170-02		FASTBOOT® WING RH DE-ICE BOOT	1	4.4
3	P25S-5D5170-07		FASTBOOT® WING TIP LH DE-ICE BOOT	1	0.3
4	P25S-5D5170-08		FASTBOOT® WING TIP RH DE-ICE BOOT	1	0.3
5	P25S-5D5170-03		FASTBOOT® HORIZONTAL STABILIZER LH DE-ICE BOOT	1	1.9
6	P25S-5D5170-04		FASTBOOT® HORIZONTAL STABILIZER RH DE-ICE BOOT	1	1.9
7	P25S-5D5101-05		FASTBOOT® VERTICAL STABILIZER DE-ICE BOOT	1	0.6

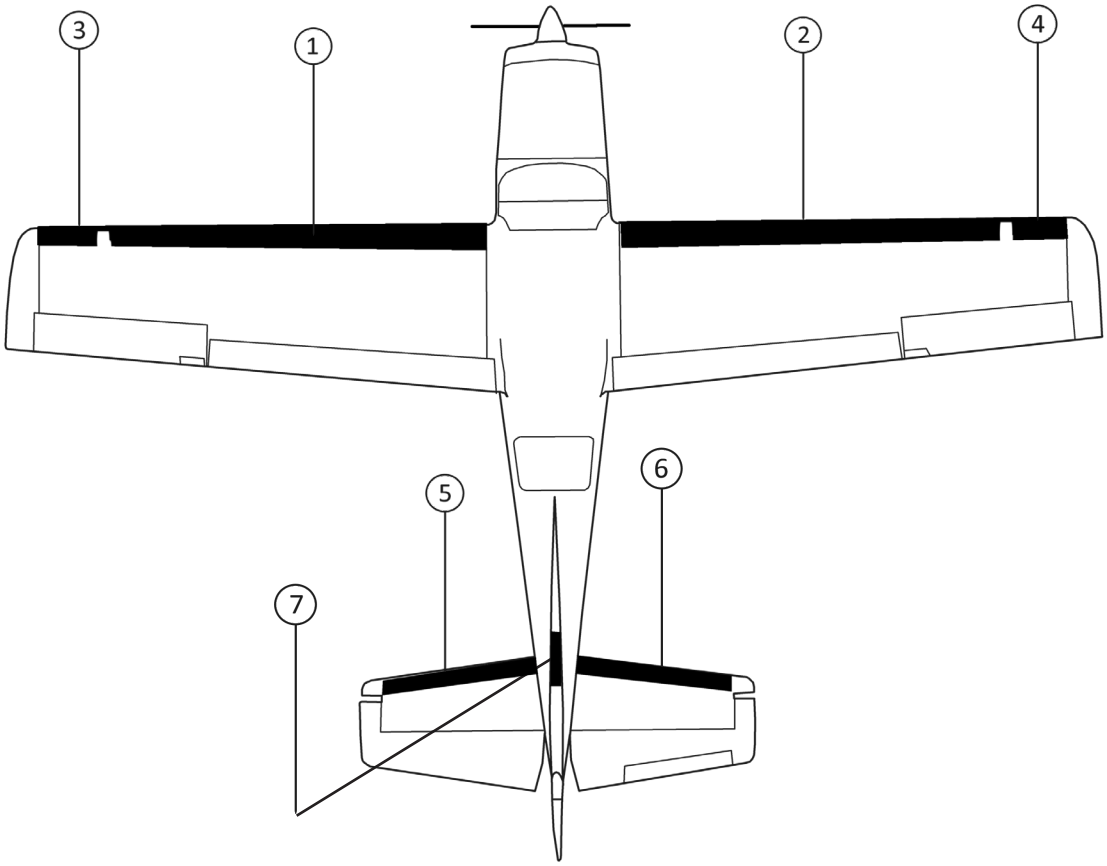

CESSNA T303 (CRUSADER)

STANDARD DE-ICE BOOTS

POSITION ID	GOODRICH PART NUMBER	AIRCRAFT OEM P/N	DESCRIPTION	QTY PER AIRCRAFT	WT
1	25S-5D5124-01		INBOARD WING LH DE-ICE BOOT	1	1.3
2	25S-5D5124-02		INBOARD WING RH DE-ICE BOOT	1	1.3
3	25S-5D5124-03		OUTBOARD WING LH DE-ICE BOOT	1	4.0
4	25S-5D5124-04		OUTBOARD WING RH DE-ICE BOOT	1	4.0
5	25S-5D5124-05		HORIZONTAL STABILIZER LH DE-ICE BOOT	1	2.2
6	25S-5D5124-06		HORIZONTAL STABILIZER RH DE-ICE BOOT	1	2.2
7	25S-5D5124-07		VERTICAL STABILIZER DE-ICE BOOT	1	1.3

FASTboot® DE-ICE BOOTS

POSITION ID	GOODRICH PART NUMBER	AIRCRAFT OEM P/N	DESCRIPTION	QTY PER AIRCRAFT	WT
1	P25S-5D5124-01		FASTBOOT® INBOARD WING LH DE-ICE BOOT	1	1.3
2	P25S-5D5124-02		FASTBOOT® INBOARD WING RH DE-ICE BOOT	1	1.3
3	P25S-5D5124-03		FASTBOOT® OUTBOARD WING LH DE-ICE BOOT	1	4.0
4	P25S-5D5124-04		FASTBOOT® OUTBOARD WING RH DE-ICE BOOT	1	4.0
5	P25S-5D5124-05		FASTBOOT® HORIZONTAL STABILIZER LH DE-ICE BOOT	1	2.2
6	P25S-5D5124-06		FASTBOOT® HORIZONTAL STABILIZER RH DE-ICE BOOT	1	2.2
7	P25S-5D5124-07		FASTBOOT® VERTICAL STABILIZER DE-ICE BOOT	1	1.3

CESSNA T303 (CRUSADER)

CESSNA T303 (CRUSADER)

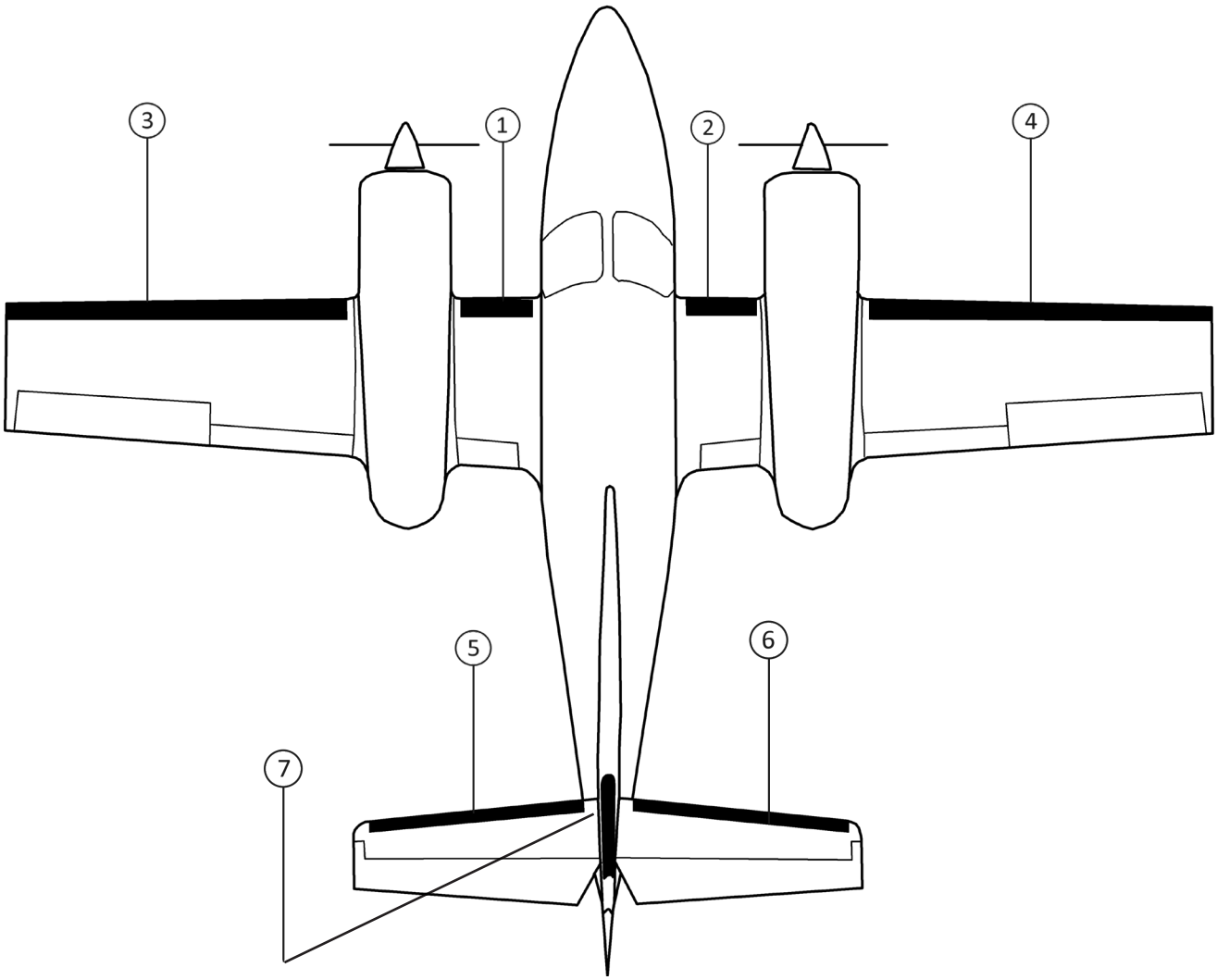

CESSNA 310

STANDARD DE-ICE BOOTS

POSITION ID	GOODRICH PART NUMBER	AIRCRAFT OEM P/N	DESCRIPTION	QTY PER AIRCRAFT	WT
1	29S5D2010-1-1		NACELLE-TIP LH TTS DE-ICE BOOT	1	4.3
2	29S5D2010-1-2		NACELLE-TIP RH TTS DE-ICE BOOT	1	4.4
2	29S5D2010-3-2*		NACELLE-TIP RH TTS DE-ICE BOOT	1	4.4
3	29S5D2010-2-1		HORIZONTAL STABILIZER LH/RH TTS DE-ICE BOOT	2	3.6

TYPE 29 SEWN DE-ICER PROVIDES HIGHER DURABILITY THAN TYPE 23 TUBE TYPE DESIGN
*29S5D2010-3-2 HAS CUTOUT FOR LIFT TRANSDUCER

SUPERSEDED STANDARD DE-ICE BOOTS

POSITION ID	GOODRICH PART NUMBER	AIRCRAFT OEM P/N	DESCRIPTION	QTY PER AIRCRAFT	WT
1	23S-2010-1-1	0820517-9	NACELLE-TIP LH DE-ICE BOOT (SUPERSEDED BY P/N 29S5D2010-1-1)	1	4.6
2	23S-2010-1-2	0820517-10	NACELLE-TIP RH DE-ICE BOOT (SUPERSEDED BY P/N 29S5D2010-1-2)	1	4.7
3	23S-2010-2-1	0820517-11	HORIZONTAL STABILIZER LH/RH DE-ICE BOOT (SUPERSEDED BY P/N 29S5D2010-2-1)	2	3.7

FASTboot® DE-ICE BOOTS

POSITION ID	GOODRICH PART NUMBER	AIRCRAFT OEM P/N	DESCRIPTION	QTY PER AIRCRAFT	WT
1	P29S5D2010-1-1		FASTBOOT® NACELLE-TIP LH TTS DE-ICE BOOT	1	4.3
2	P29S5D2010-1-2		FASTBOOT® NACELLE-TIP RH TTS DE-ICE BOOT	1	4.4
2	P29S5D2010-3-2*		FASTBOOT® NACELLE-TIP RH TTS DE-ICE BOOT	1	4.4
3	P29S5D2010-2-1		FASTBOOT® HORIZONTAL STABILIZER LH/RH TTS DE-ICE BOOT	2	3.6

TYPE 29 SEWN DE-ICER PROVIDES HIGHER DURABILITY THAN TYPE 23 TUBE TYPE DESIGN
*P29S5D2010-3-2 HAS CUTOUT FOR LIFT TRANSDUCER

CESSNA 310

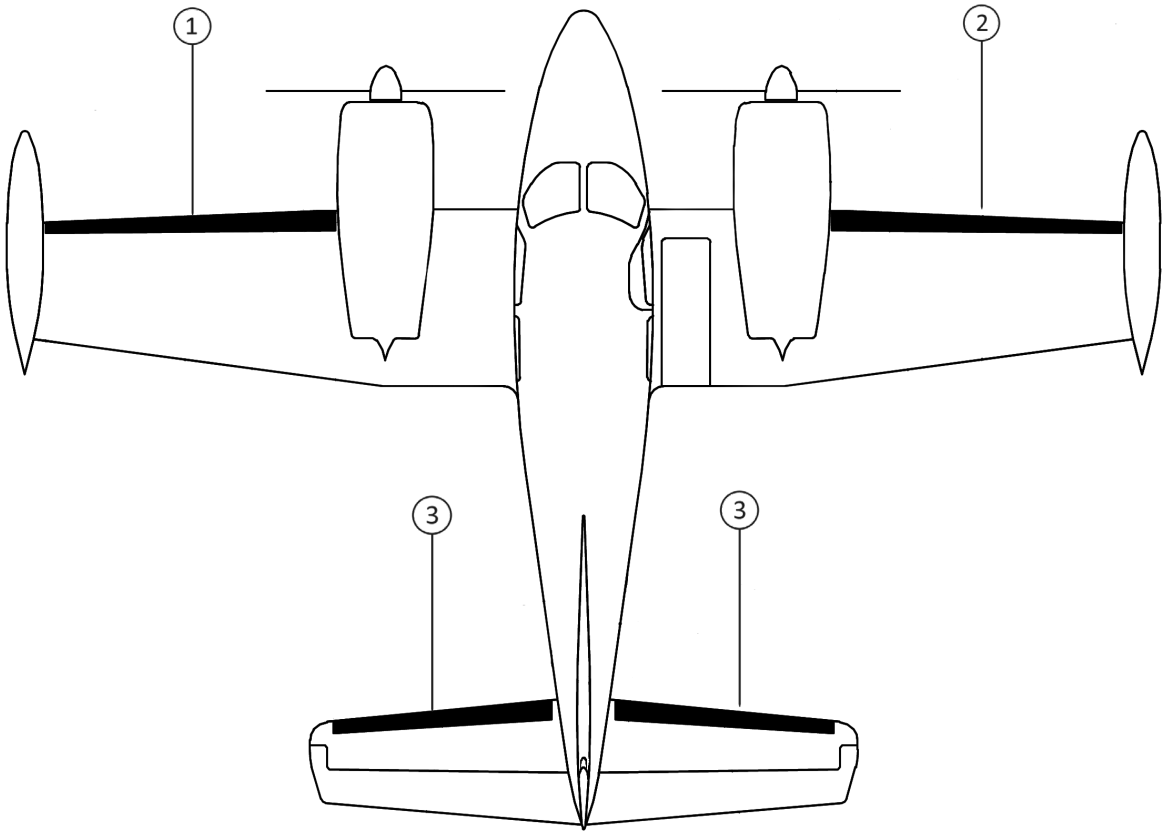

CESSNA 310A (MILITARY DESIGNATION U-3A)

STANDARD DE-ICE BOOTS

POSITION ID	GOODRICH PART NUMBER	AIRCRAFT OEM P/N	DESCRIPTION	QTY PER AIRCRAFT	WT
1	29S5D2010-1-1		NACELLE-TIP LH TTS DE-ICE BOOT	1	4.3
2	29S5D2010-1-2		NACELLE-TIP RH TTS DE-ICE BOOT	1	4.4
2	29S5D2010-3-2*		NACELLE-TIP RH TTS DE-ICE BOOT	1	4.4
3	29S5D2010-2-1		HORIZONTAL STABILIZER LH/RH TTS DE-ICE BOOT	2	3.6

TYPE 29 SEWN DE-ICER PROVIDES HIGHER DURABILITY THAN TYPE 23 TUBE TYPE DESIGN
*29S5D2010-3-2 HAS CUTOUT FOR LIFT TRANSDUCER

SUPERSEDED STANDARD DE-ICE BOOTS

POSITION ID	GOODRICH PART NUMBER	AIRCRAFT OEM P/N	DESCRIPTION	QTY PER AIRCRAFT	WT
1	23S-2010-1-1	0820517-9	NACELLE-TIP LH DE-ICE BOOT (SUPERSEDED BY P/N 29S5D2010-1-1)	1	4.6
2	23S-2010-1-2	0820517-10	NACELLE-TIP RH DE-ICE BOOT (SUPERSEDED BY P/N 29S5D2010-1-2)	1	4.7
3	23S-2010-2-1	0820517-11	HORIZONTAL STABILIZER LH/RH DE-ICE BOOT (SUPERSEDED BY P/N 29S5D2010-2-1)	2	3.7

FASTboot® DE-ICE BOOTS

POSITION ID	GOODRICH PART NUMBER	AIRCRAFT OEM P/N	DESCRIPTION	QTY PER AIRCRAFT	WT
1	P29S5D2010-1-1		FASTBOOT® NACELLE-TIP LH TTS DE-ICE BOOT	1	4.3
2	P29S5D2010-1-2		FASTBOOT® NACELLE-TIP RH TTS DE-ICE BOOT	1	4.4
2	P29S5D2010-3-2*		FASTBOOT® NACELLE-TIP RH TTS DE-ICE BOOT	1	4.4
3	P29S5D2010-2-1		FASTBOOT® HORIZONTAL STABILIZER LH/RH TTS DE-ICE BOOT	2	3.6

TYPE 29 SEWN DE-ICER PROVIDES HIGHER DURABILITY THAN TYPE 23 TUBE TYPE DESIGN
*P29S5D2010-3-2 HAS CUTOUT FOR LIFT TRANSDUCER

CESSNA 310A (MILITARY DESIGNATION U-3A)

CESSNA 310A (MILITARY DESIGNATION U-3A)

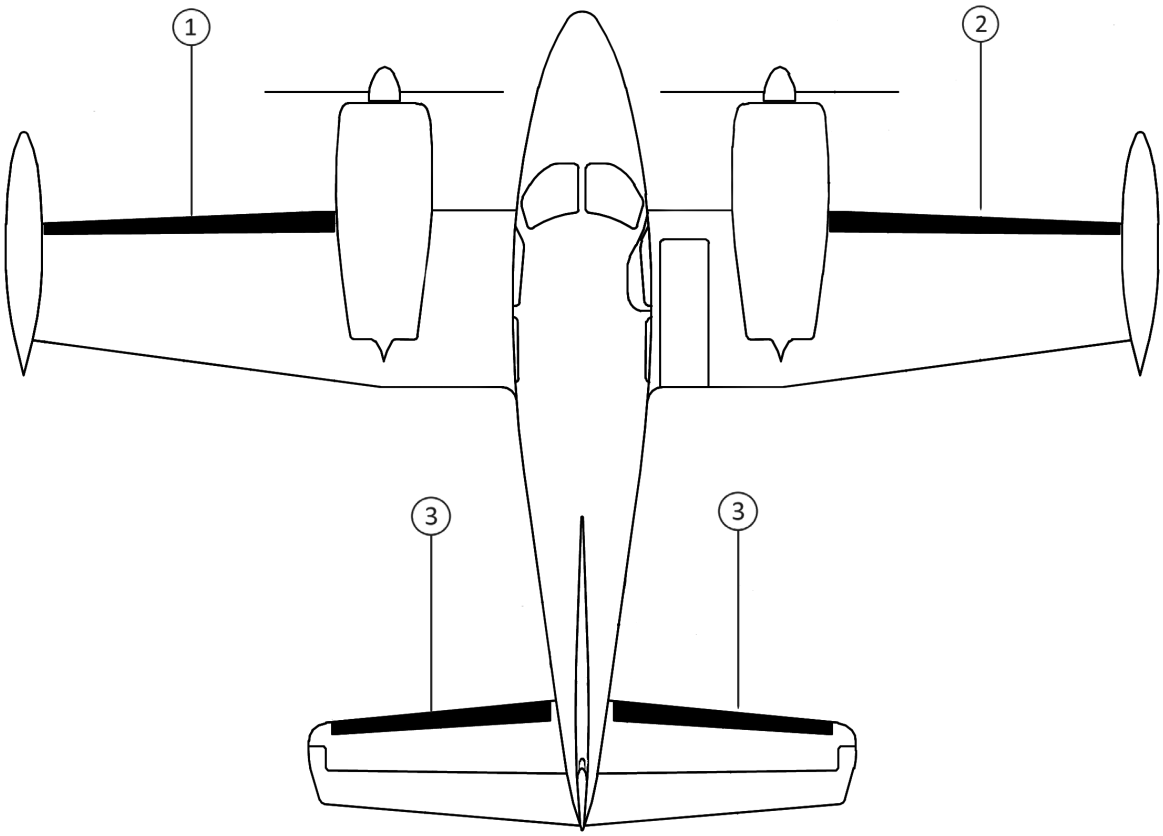

CESSNA 310B

STANDARD DE-ICE BOOTS

POSITION ID	GOODRICH PART NUMBER	AIRCRAFT OEM P/N	DESCRIPTION	QTY PER AIRCRAFT	WT
1	29S5D2010-1-1		NACELLE-TIP LH TTS DE-ICE BOOT	1	4.3
2	29S5D2010-1-2		NACELLE-TIP RH TTS DE-ICE BOOT	1	4.4
2	29S5D2010-3-2*		NACELLE-TIP RH TTS DE-ICE BOOT	1	4.4
3	29S5D2010-2-1		HORIZONTAL STABILIZER LH/RH TTS DE-ICE BOOT	2	3.6

TYPE 29 SEWN DE-ICER PROVIDES HIGHER DURABILITY THAN TYPE 23 TUBE TYPE DESIGN
*29S5D2010-3-2 HAS CUTOUT FOR LIFT TRANSDUCER

SUPERSEDED STANDARD DE-ICE BOOTS

POSITION ID	GOODRICH PART NUMBER	AIRCRAFT OEM P/N	DESCRIPTION	QTY PER AIRCRAFT	WT
1	23S-2010-1-1	0820517-9	NACELLE-TIP LH DE-ICE BOOT (SUPERSEDED BY P/N 29S5D2010-1-1)	1	4.6
2	23S-2010-1-2	0820517-10	NACELLE-TIP RH DE-ICE BOOT (SUPERSEDED BY P/N 29S5D2010-1-2)	1	4.7
3	23S-2010-2-1	0820517-11	HORIZONTAL STABILIZER LH/RH DE-ICE BOOT (SUPERSEDED BY P/N 29S5D2010-2-1)	2	3.7

FASTboot® DE-ICE BOOTS

POSITION ID	GOODRICH PART NUMBER	AIRCRAFT OEM P/N	DESCRIPTION	QTY PER AIRCRAFT	WT
1	P29S5D2010-1-1		FASTBOOT® NACELLE-TIP LH TTS DE-ICE BOOT	1	4.3
2	P29S5D2010-1-2		FASTBOOT® NACELLE-TIP RH TTS DE-ICE BOOT	1	4.4
2	P29S5D2010-3-2*		FASTBOOT® NACELLE-TIP RH TTS DE-ICE BOOT	1	4.4
3	P29S5D2010-2-1		FASTBOOT® HORIZONTAL STABILIZER LH/RH TTS DE-ICE BOOT	2	3.6

TYPE 29 SEWN DE-ICER PROVIDES HIGHER DURABILITY THAN TYPE 23 TUBE TYPE DESIGN
*P29S5D2010-3-2 HAS CUTOUT FOR LIFT TRANSDUCER

CESSNA 310B

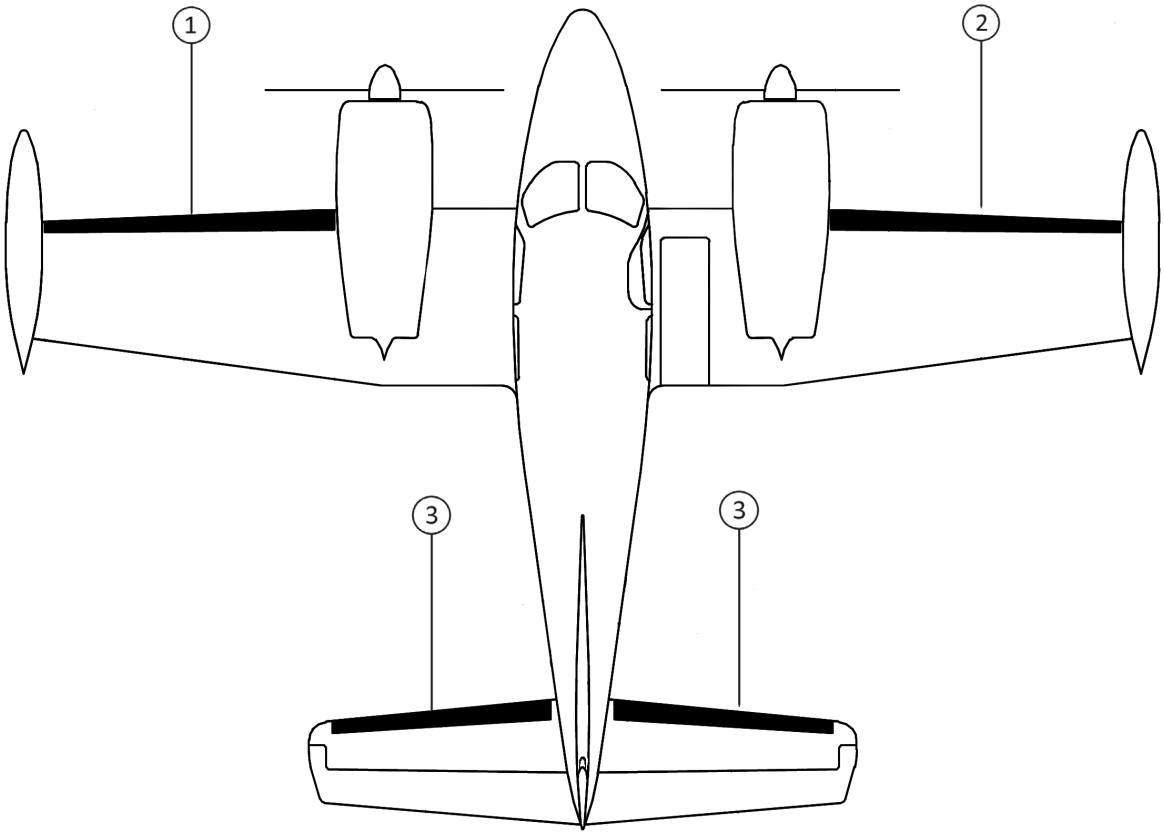

CESSNA 310C

STANDARD DE-ICE BOOTS

POSITION ID	GOODRICH PART NUMBER	AIRCRAFT OEM P/N	DESCRIPTION	QTY PER AIRCRAFT	WT
1	29S5D2010-1-1		NACELLE-TIP LH TTS DE-ICE BOOT	1	4.3
2	29S5D2010-1-2		NACELLE-TIP RH TTS DE-ICE BOOT	1	4.4
2	29S5D2010-3-2*		NACELLE-TIP RH TTS DE-ICE BOOT	1	4.4
3	29S5D2010-2-1		HORIZONTAL STABILIZER LH/RH TTS DE-ICE BOOT	2	3.6

TYPE 29 SEWN DE-ICER PROVIDES HIGHER DURABILITY THAN TYPE 23 TUBE TYPE DESIGN
*29S5D2010-3-2 HAS CUTOUT FOR LIFT TRANSDUCER

SUPERSEDED STANDARD DE-ICE BOOTS

POSITION ID	GOODRICH PART NUMBER	AIRCRAFT OEM P/N	DESCRIPTION	QTY PER AIRCRAFT	WT
1	23S-2010-1-1	0820517-9	NACELLE-TIP LH DE-ICE BOOT (SUPERSEDED BY P/N 29S5D2010-1-1)	1	4.6
2	23S-2010-1-2	0820517-10	NACELLE-TIP RH DE-ICE BOOT (SUPERSEDED BY P/N 29S5D2010-1-2)	1	4.7
3	23S-2010-2-1	0820517-11	HORIZONTAL STABILIZER LH/RH DE-ICE BOOT (SUPERSEDED BY P/N 29S5D2010-2-1)	2	3.7

FASTboot® DE-ICE BOOTS

POSITION ID	GOODRICH PART NUMBER	AIRCRAFT OEM P/N	DESCRIPTION	QTY PER AIRCRAFT	WT
1	P29S5D2010-1-1		FASTBOOT® NACELLE-TIP LH TTS DE-ICE BOOT	1	4.3
2	P29S5D2010-1-2		FASTBOOT® NACELLE-TIP RH TTS DE-ICE BOOT	1	4.4
2	P29S5D2010-3-2*		FASTBOOT® NACELLE-TIP RH TTS DE-ICE BOOT	1	4.4
3	P29S5D2010-2-1		FASTBOOT® HORIZONTAL STABILIZER LH/RH TTS DE-ICE BOOT	2	3.6

TYPE 29 SEWN DE-ICER PROVIDES HIGHER DURABILITY THAN TYPE 23 TUBE TYPE DESIGN
*P29S5D2010-3-2 HAS CUTOUT FOR LIFT TRANSDUCER

CESSNA 310C

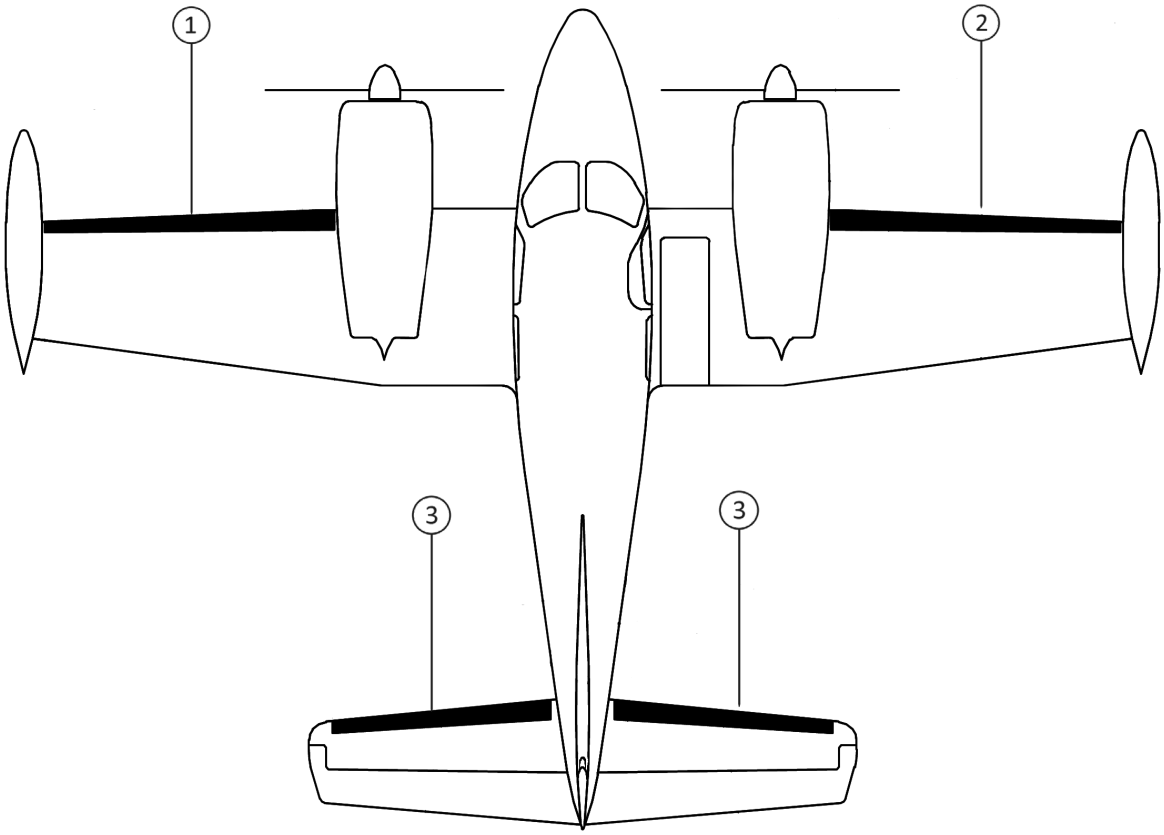

CESSNA 310D

STANDARD DE-ICE BOOTS

POSITION ID	GOODRICH PART NUMBER	AIRCRAFT OEM P/N	DESCRIPTION	QTY PER AIRCRAFT	WT
1	29S5D2010-1-1		NACELLE-TIP LH TTSDE-ICE BOOT	1	4.3
2	29S5D2010-1-2		NACELLE-TIP RH TTS DE-ICE BOOT	1	4.4
2	29S5D2010-3-2*		NACELLE-TIP RH TTS DE-ICE BOOT	1	4.4
3	29S5D2010-2-1		HORIZONTAL STABILIZER LH/RH TTS DE-ICE BOOT	2	3.6

TYPE 29 SEWN DE-ICER PROVIDES HIGHER DURABILITY THAN TYPE 23 TUBE TYPE DESIGN
*29S5D2010-3-2 HAS CUTOUT FOR LIFT TRANSDUCER

SUPERSEDED STANDARD DE-ICE BOOTS

POSITION ID	GOODRICH PART NUMBER	AIRCRAFT OEM P/N	DESCRIPTION	QTY PER AIRCRAFT	WT
1	23S-2010-1-1	0820517-9	NACELLE-TIP LH DE-ICE BOOT (SUPERSEDED BY P/N 29S5D2010-1-1)	1	4.6
2	23S-2010-1-2	0820517-10	NACELLE-TIP RH DE-ICE BOOT (SUPERSEDED BY P/N 29S5D2010-1-2)	1	4.7
3	23S-2010-2-1	0820517-11	HORIZONTAL STABILIZER LH/RH DE-ICE BOOT (SUPERSEDED BY P/N 29S5D2010-2-1)	2	3.7

FASTboot® DE-ICE BOOTS

POSITION ID	GOODRICH PART NUMBER	AIRCRAFT OEM P/N	DESCRIPTION	QTY PER AIRCRAFT	WT
1	P29S5D2010-1-1		FASTBOOT® NACELLE-TIP LH TTS DE-ICE BOOT	1	4.3
2	P29S5D2010-1-2		FASTBOOT® NACELLE-TIP RH TTS DE-ICE BOOT	1	4.4
2	P29S5D2010-3-2*		FASTBOOT® NACELLE-TIP RH TTS DE-ICE BOOT	1	4.4
3	P29S5D2010-2-1		FASTBOOT® HORIZONTAL STABILIZER LH/RH TTS DE-ICE BOOT	2	3.6

TYPE 29 SEWN DE-ICER PROVIDES HIGHER DURABILITY THAN TYPE 23 TUBE TYPE DESIGN
*P29S5D2010-3-2 HAS CUTOUT FOR LIFT TRANSDUCER

CESSNA 310D

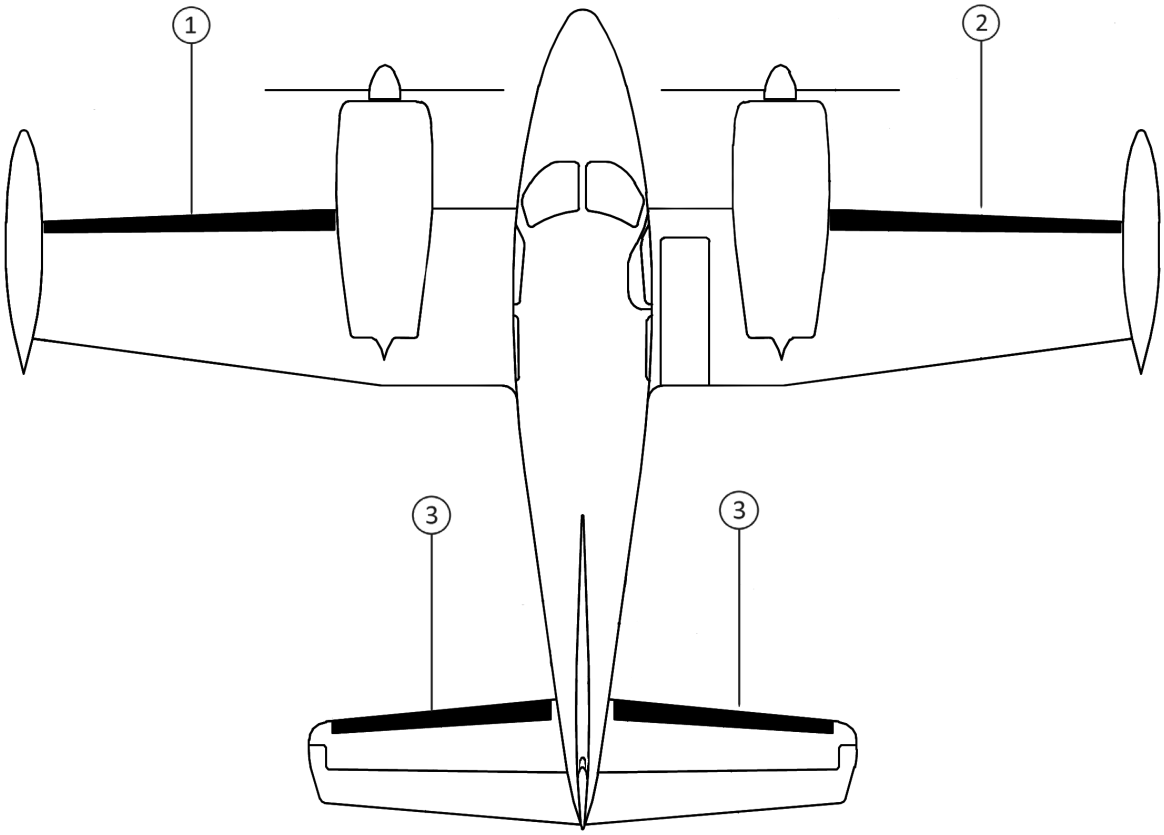

CESSNA 310E (MILITARY DESIGNATION U-3B)

STANDARD DE-ICE BOOTS

POSITION ID	GOODRICH PART NUMBER	AIRCRAFT OEM P/N	DESCRIPTION	QTY PER AIRCRAFT	WT
1	29S5D2010-1-1		NACELLE-TIP LH TTS DE-ICE BOOT	1	4.3
2	29S5D2010-1-2		NACELLE-TIP RH TTS DE-ICE BOOT	1	4.4
2	29S5D2010-3-2*		NACELLE-TIP RH TTS DE-ICE BOOT	1	4.4
3	29S5D2010-2-1		HORIZONTAL STABILIZER LH/RH TTS DE-ICE BOOT	2	3.6

TYPE 29 SEWN DE-ICER PROVIDES HIGHER DURABILITY THAN TYPE 23 TUBE TYPE DESIGN
*29S5D2010-3-2 HAS CUTOUT FOR LIFT TRANSDUCER

SUPERSEDED STANDARD DE-ICE BOOTS

POSITION ID	GOODRICH PART NUMBER	AIRCRAFT OEM P/N	DESCRIPTION	QTY PER AIRCRAFT	WT
1	23S-2010-1-1	0820517-9	NACELLE-TIP LH DE-ICE BOOT (SUPERSEDED BY P/N 29S5D2010-1-1)	1	4.6
2	23S-2010-1-2	0820517-10	NACELLE-TIP RH DE-ICE BOOT (SUPERSEDED BY P/N 29S5D2010-1-2)	1	4.7
3	23S-2010-2-1	0820517-11	HORIZONTAL STABILIZER LH/RH DE-ICE BOOT (SUPERSEDED BY P/N 29S5D2010-2-1)	2	3.7

FASTboot® DE-ICE BOOTS

POSITION ID	GOODRICH PART NUMBER	AIRCRAFT OEM P/N	DESCRIPTION	QTY PER AIRCRAFT	WT
1	P29S5D2010-1-1		FASTBOOT® NACELLE-TIP LH TTS DE-ICE BOOT	1	4.3
2	P29S5D2010-1-2		FASTBOOT® NACELLE-TIP RH TTS DE-ICE BOOT	1	4.4
2	P29S5D2010-3-2*		FASTBOOT® NACELLE-TIP RH TTS DE-ICE BOOT	1	4.4
3	P29S5D2010-2-1		FASTBOOT® HORIZONTAL STABILIZER LH/RH TTS DE-ICE BOOT	2	3.6

TYPE 29 SEWN DE-ICER PROVIDES HIGHER DURABILITY THAN TYPE 23 TUBE TYPE DESIGN
*P29S5D2010-3-2 HAS CUTOUT FOR LIFT TRANSDUCER

CESSNA 310E (MILITARY DESIGNATION U-3B)

CESSNA 310E (MILITARY DESIGNATION U-3B)

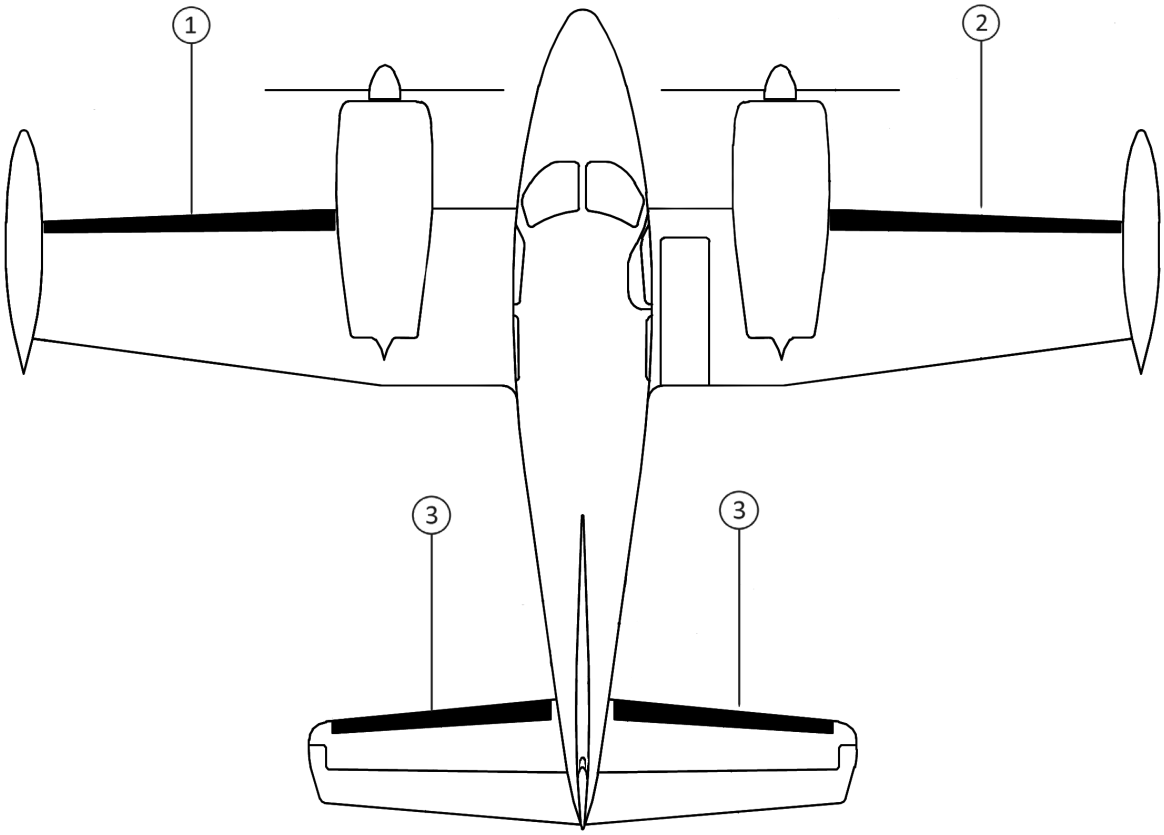

CESSNA 310F

STANDARD DE-ICE BOOTS

POSITION ID	GOODRICH PART NUMBER	AIRCRAFT OEM P/N	DESCRIPTION	QTY PER AIRCRAFT	WT
1	29S5D2010-1-1		NACELLE-TIP LH TTS DE-ICE BOOT	1	4.3
2	29S5D2010-1-2		NACELLE-TIP RH TTS DE-ICE BOOT	1	4.4
2	29S5D2010-3-2*		NACELLE-TIP RH TTS DE-ICE BOOT	1	4.4
3	29S5D2010-2-1		HORIZONTAL STABILIZER LH/RH TTS DE-ICE BOOT	2	3.6

TYPE 29 SEWN DE-ICER PROVIDES HIGHER DURABILITY THAN TYPE 23 TUBE TYPE DESIGN
*29S5D2010-3-2 HAS CUTOUT FOR LIFT TRANSDUCER

SUPERSEDED STANDARD DE-ICE BOOTS

POSITION ID	GOODRICH PART NUMBER	AIRCRAFT OEM P/N	DESCRIPTION	QTY PER AIRCRAFT	WT
1	23S-2010-1-1	0820517-9	NACELLE-TIP LH DE-ICE BOOT (SUPERSEDED BY P/N 29S5D2010-1-1)	1	4.6
2	23S-2010-1-2	0820517-10	NACELLE-TIP RH DE-ICE BOOT (SUPERSEDED BY P/N 29S5D2010-1-2)	1	4.7
3	23S-2010-2-1	0820517-11	HORIZONTAL STABILIZER LH/RH DE-ICE BOOT (SUPERSEDED BY P/N 29S5D2010-2-1)	2	3.7

FASTboot® DE-ICE BOOTS

POSITION ID	GOODRICH PART NUMBER	AIRCRAFT OEM P/N	DESCRIPTION	QTY PER AIRCRAFT	WT
1	P29S5D2010-1-1		FASTBOOT® NACELLE-TIP LH TTS DE-ICE BOOT	1	4.3
2	P29S5D2010-1-2		FASTBOOT® NACELLE-TIP RH TTS DE-ICE BOOT	1	4.4
2	P29S5D2010-3-2*		FASTBOOT® NACELLE-TIP RH TTS DE-ICE BOOT	1	4.4
3	P29S5D2010-2-1		FASTBOOT® HORIZONTAL STABILIZER LH/RH TTS DE-ICE BOOT	2	3.6

TYPE 29 SEWN DE-ICER PROVIDES HIGHER DURABILITY THAN TYPE 23 TUBE TYPE DESIGN
*P29S5D2010-3-2 HAS CUTOUT FOR LIFT TRANSDUCER

CESSNA 310F

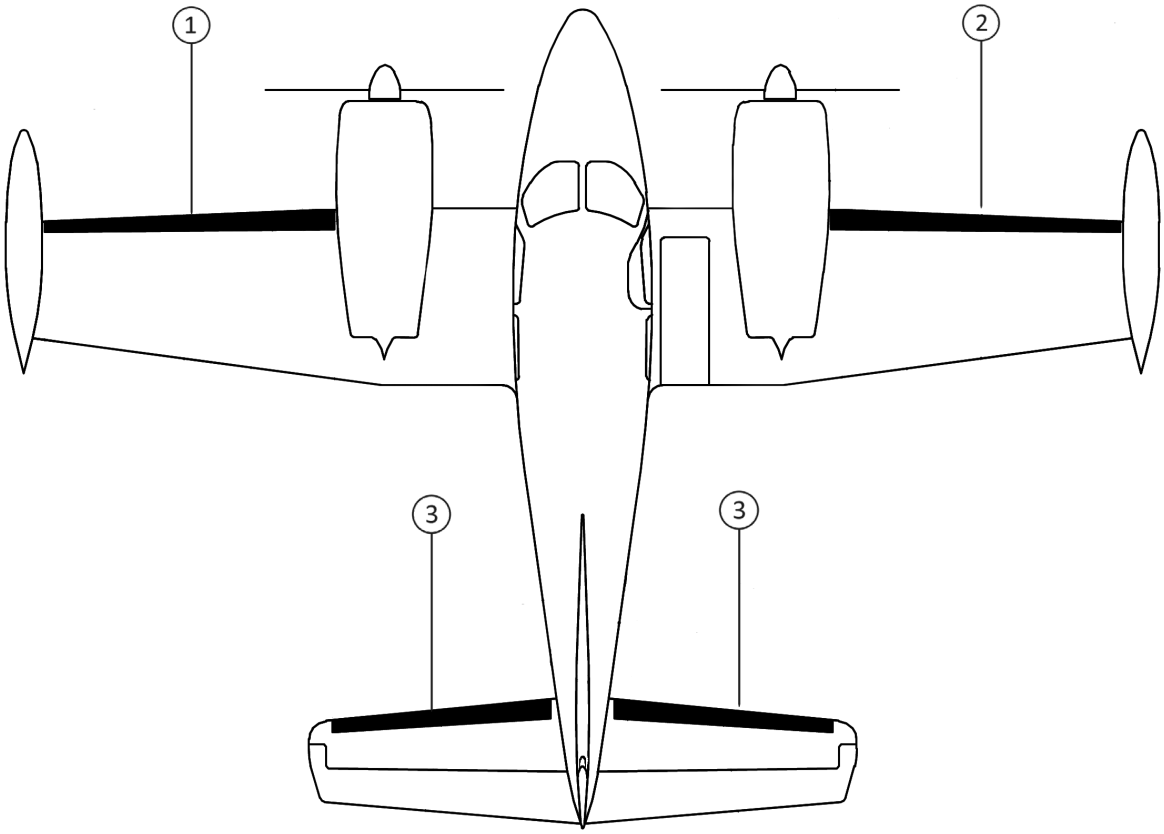

CESSNA 310G

STANDARD DE-ICE BOOTS

POSITION ID	GOODRICH PART NUMBER	AIRCRAFT OEM P/N	DESCRIPTION	QTY PER AIRCRAFT	WT
1	29S5D2010-1-1		NACELLE-TIP LH TTS DE-ICE BOOT	1	4.3
2	29S5D2010-1-2		NACELLE-TIP RH TTS DE-ICE BOOT	1	4.4
2	29S5D2010-3-2*		NACELLE-TIP RH TTS DE-ICE BOOT	1	4.4
3	29S5D2010-2-1		HORIZONTAL STABILIZER LH/RH TTS DE-ICE BOOT	2	3.6

TYPE 29 SEWN DE-ICER PROVIDES HIGHER DURABILITY THAN TYPE 23 TUBE TYPE DESIGN
*29S5D2010-3-2 HAS CUTOUT FOR LIFT TRANSDUCER

SUPERSEDED STANDARD DE-ICE BOOTS

POSITION ID	GOODRICH PART NUMBER	AIRCRAFT OEM P/N	DESCRIPTION	QTY PER AIRCRAFT	WT
1	23S-2010-1-1	0820517-9	NACELLE-TIP LH DE-ICE BOOT (SUPERSEDED BY P/N 29S5D2010-1-1)	1	4.6
2	23S-2010-1-2	0820517-10	NACELLE-TIP RH DE-ICE BOOT (SUPERSEDED BY P/N 29S5D2010-1-2)	1	4.7
3	23S-2010-2-1	0820517-11	HORIZONTAL STABILIZER LH/RH DE-ICE BOOT (SUPERSEDED BY P/N 29S5D2010-2-1)	2	3.7

FASTboot® DE-ICE BOOTS

POSITION ID	GOODRICH PART NUMBER	AIRCRAFT OEM P/N	DESCRIPTION	QTY PER AIRCRAFT	WT
1	P29S5D2010-1-1		FASTBOOT® NACELLE-TIP LH TTS DE-ICE BOOT	1	4.3
2	P29S5D2010-1-2		FASTBOOT® NACELLE-TIP RH TTS DE-ICE BOOT	1	4.4
2	P29S5D2010-3-2*		FASTBOOT® NACELLE-TIP RH TTS DE-ICE BOOT	1	4.4
3	P29S5D2010-2-1		FASTBOOT® HORIZONTAL STABILIZER LH/RH TTS DE-ICE BOOT	2	3.6

TYPE 29 SEWN DE-ICER PROVIDES HIGHER DURABILITY THAN TYPE 23 TUBE TYPE DESIGN
*P29S5D2010-3-2 HAS CUTOUT FOR LIFT TRANSDUCER

CESSNA 310G

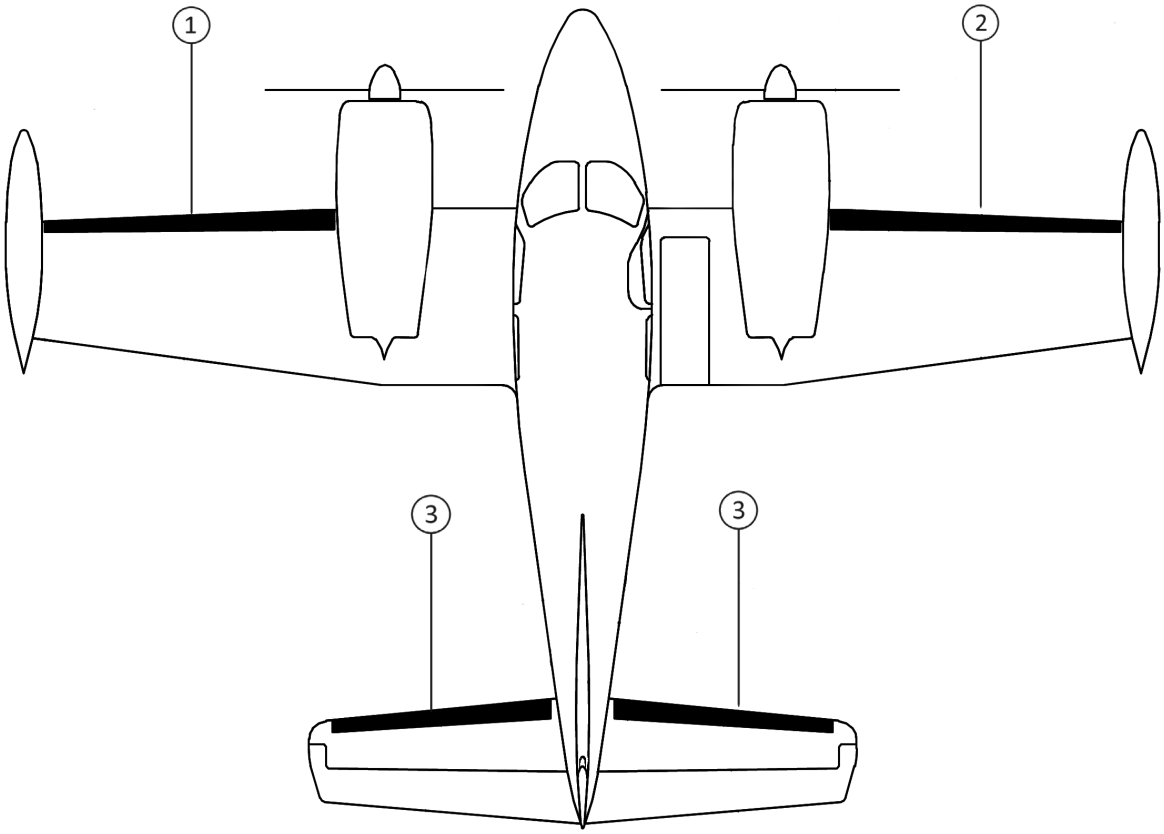

CESSNA 310H

STANDARD DE-ICE BOOTS

POSITION ID	GOODRICH PART NUMBER	AIRCRAFT OEM P/N	DESCRIPTION	QTY PER AIRCRAFT	WT
1	29S5D2010-1-1		NACELLE-TIP LH TTS DE-ICE BOOT	1	4.3
2	29S5D2010-1-2		NACELLE-TIP RH TTS DE-ICE BOOT	1	4.4
2	29S5D2010-3-2*		NACELLE-TIP RH TTS DE-ICE BOOT	1	4.4
3	29S5D2010-2-1		HORIZONTAL STABILIZER LH/RH TTS DE-ICE BOOT	2	3.6

TYPE 29 SEWN DE-ICER PROVIDES HIGHER DURABILITY THAN TYPE 23 TUBE TYPE DESIGN
*29S5D2010-3-2 HAS CUTOUT FOR LIFT TRANSDUCER

SUPERSEDED STANDARD DE-ICE BOOTS

POSITION ID	GOODRICH PART NUMBER	AIRCRAFT OEM P/N	DESCRIPTION	QTY PER AIRCRAFT	WT
1	23S-2010-1-1	0820517-9	NACELLE-TIP LH DE-ICE BOOT (SUPERSEDED BY P/N 29S5D2010-1-1)	1	4.6
2	23S-2010-1-2	0820517-10	NACELLE-TIP RH DE-ICE BOOT (SUPERSEDED BY P/N 29S5D2010-1-2)	1	4.7
3	23S-2010-2-1	0820517-11	HORIZONTAL STABILIZER LH/RH DE-ICE BOOT (SUPERSEDED BY P/N 29S5D2010-2-1)	2	3.7

FASTboot® DE-ICE BOOTS

POSITION ID	GOODRICH PART NUMBER	AIRCRAFT OEM P/N	DESCRIPTION	QTY PER AIRCRAFT	WT
1	P29S5D2010-1-1		FASTBOOT® NACELLE-TIP LH TTS DE-ICE BOOT	1	4.3
2	P29S5D2010-1-2		FASTBOOT® NACELLE-TIP RH TTS DE-ICE BOOT	1	4.4
2	P29S5D2010-3-2*		FASTBOOT® NACELLE-TIP RH TTS DE-ICE BOOT	1	4.4
3	P29S5D2010-2-1		FASTBOOT® HORIZONTAL STABILIZER LH/RH TTS DE-ICE BOOT	2	3.6

TYPE 29 SEWN DE-ICER PROVIDES HIGHER DURABILITY THAN TYPE 23 TUBE TYPE DESIGN
*P29S5D2010-3-2 HAS CUTOUT FOR LIFT TRANSDUCER

CESSNA 310H

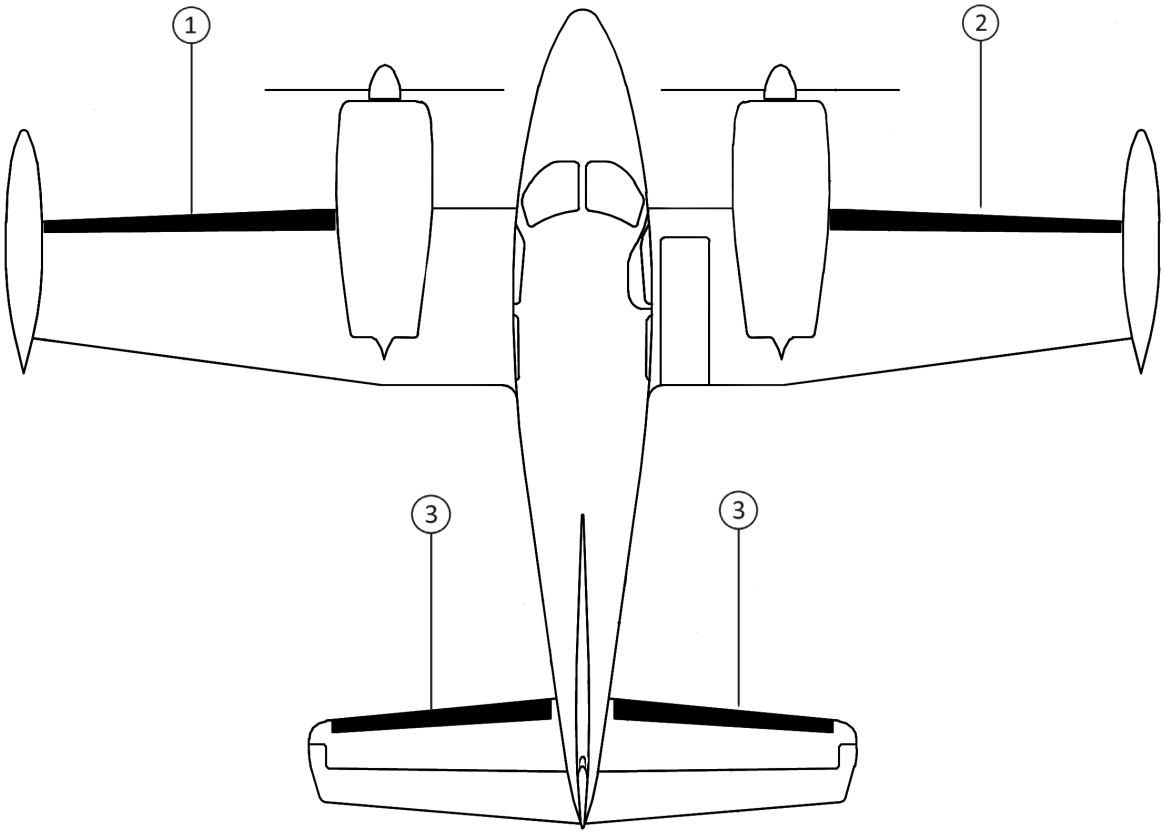

CESSNA 310I

STANDARD DE-ICE BOOTS

POSITION ID	GOODRICH PART NUMBER	AIRCRAFT OEM P/N	DESCRIPTION	QTY PER AIRCRAFT	WT
1	29S5D2010-1-1		NACELLE-TIP LH TTS DE-ICE BOOT	1	4.3
2	29S5D2010-1-2		NACELLE-TIP RH TTS DE-ICE BOOT	1	4.4
2	29S5D2010-3-2*		NACELLE-TIP RH TTS DE-ICE BOOT	1	4.4
3	29S5D2010-2-1		HORIZONTAL STABILIZER LH/RH TTS DE-ICE BOOT	2	3.6

TYPE 29 SEWN DE-ICER PROVIDES HIGHER DURABILITY THAN TYPE 23 TUBE TYPE DESIGN
*29S5D2010-3-2 HAS CUTOUT FOR LIFT TRANSDUCER

SUPERSEDED STANDARD DE-ICE BOOTS

POSITION ID	GOODRICH PART NUMBER	AIRCRAFT OEM P/N	DESCRIPTION	QTY PER AIRCRAFT	WT
1	23S-2010-1-1	0820517-9	NACELLE-TIP LH DE-ICE BOOT (SUPERSEDED BY P/N 29S5D2010-1-1)	1	4.6
2	23S-2010-1-2	0820517-10	NACELLE-TIP RH DE-ICE BOOT (SUPERSEDED BY P/N 29S5D2010-1-2)	1	4.7
3	23S-2010-2-1	0820517-11	HORIZONTAL STABILIZER LH/RH DE-ICE BOOT (SUPERSEDED BY P/N 29S5D2010-2-1)	2	3.7

FASTboot® DE-ICE BOOTS

POSITION ID	GOODRICH PART NUMBER	AIRCRAFT OEM P/N	DESCRIPTION	QTY PER AIRCRAFT	WT
1	P29S5D2010-1-1		FASTBOOT® NACELLE-TIP LH TTS DE-ICE BOOT	1	4.3
2	P29S5D2010-1-2		FASTBOOT® NACELLE-TIP RH TTS DE-ICE BOOT	1	4.4
2	P29S5D2010-3-2*		FASTBOOT® NACELLE-TIP RH TTS DE-ICE BOOT	1	4.4
3	P29S5D2010-2-1		FASTBOOT® HORIZONTAL STABILIZER LH/RH TTS DE-ICE BOOT	2	3.6

TYPE 29 SEWN DE-ICER PROVIDES HIGHER DURABILITY THAN TYPE 23 TUBE TYPE DESIGN
*P29S5D2010-3-2 HAS CUTOUT FOR LIFT TRANSDUCER

CESSNA 310I

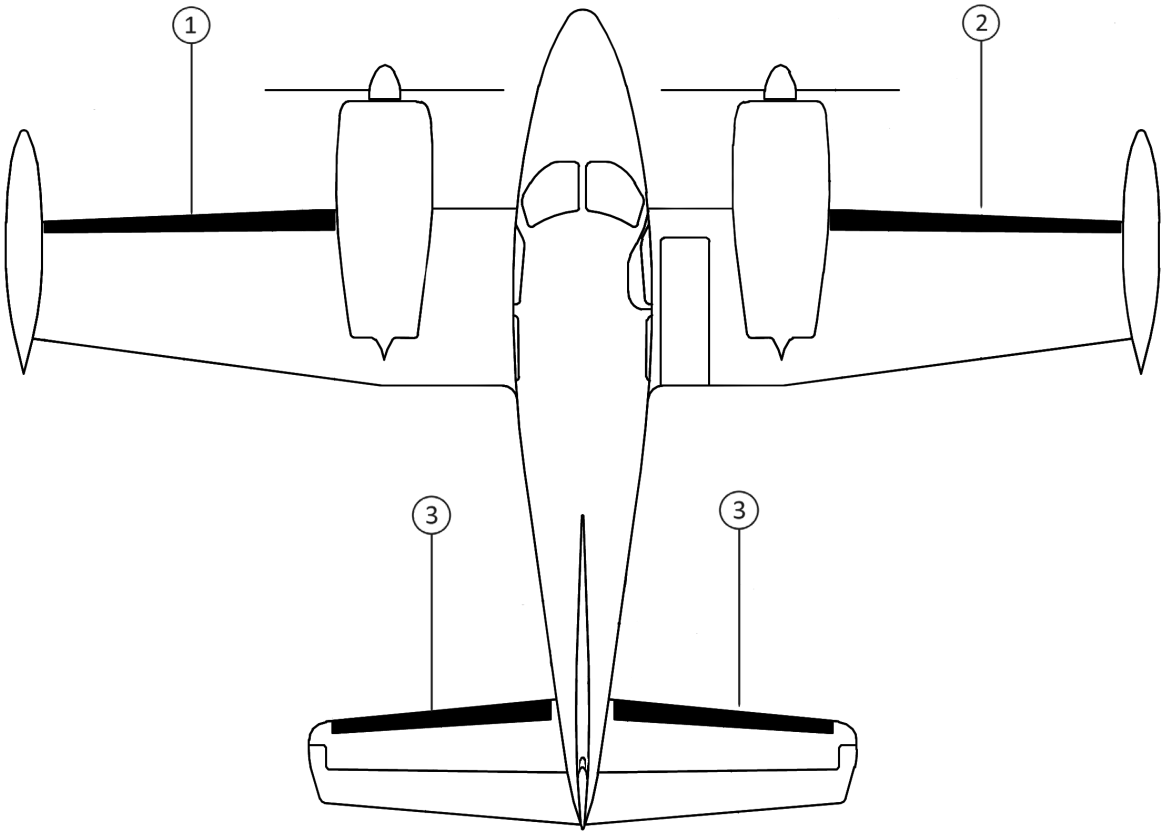

CESSNA 310J

STANDARD DE-ICE BOOTS

POSITION ID	GOODRICH PART NUMBER	AIRCRAFT OEM P/N	DESCRIPTION	QTY PER AIRCRAFT	WT
1	29S5D2010-1-1		NACELLE-TIP LH TTS DE-ICE BOOT	1	4.3
2	29S5D2010-1-2		NACELLE-TIP RH TTS DE-ICE BOOT	1	4.4
2	29S5D2010-3-2*		NACELLE-TIP RH TTS DE-ICE BOOT	1	4.4
3	29S5D2010-2-1		HORIZONTAL STABILIZER LH/RH TTS DE-ICE BOOT	2	3.6

TYPE 29 SEWN DE-ICER PROVIDES HIGHER DURABILITY THAN TYPE 23 TUBE TYPE DESIGN
*29S5D2010-3-2 HAS CUTOUT FOR LIFT TRANSDUCER

SUPERSEDED STANDARD DE-ICE BOOTS

POSITION ID	GOODRICH PART NUMBER	AIRCRAFT OEM P/N	DESCRIPTION	QTY PER AIRCRAFT	WT
1	23S-2010-1-1	0820517-9	NACELLE-TIP LH DE-ICE BOOT (SUPERSEDED BY P/N 29S5D2010-1-1)	1	4.6
2	23S-2010-1-2	0820517-10	NACELLE-TIP RH DE-ICE BOOT (SUPERSEDED BY P/N 29S5D2010-1-2)	1	4.7
3	23S-2010-2-1	0820517-11	HORIZONTAL STABILIZER LH/RH DE-ICE BOOT (SUPERSEDED BY P/N 29S5D2010-2-1)	2	3.7

FASTboot® DE-ICE BOOTS

POSITION ID	GOODRICH PART NUMBER	AIRCRAFT OEM P/N	DESCRIPTION	QTY PER AIRCRAFT	WT
1	P29S5D2010-1-1		FASTBOOT® NACELLE-TIP LH TTS DE-ICE BOOT	1	4.3
2	P29S5D2010-1-2		FASTBOOT® NACELLE-TIP RH TTS DE-ICE BOOT	1	4.4
2	P29S5D2010-3-2*		FASTBOOT® NACELLE-TIP RH TTS DE-ICE BOOT	1	4.4
3	P29S5D2010-2-1		FASTBOOT® HORIZONTAL STABILIZER LH/RH TTS DE-ICE BOOT	2	3.6

TYPE 29 SEWN DE-ICER PROVIDES HIGHER DURABILITY THAN TYPE 23 TUBE TYPE DESIGN
*P29S5D2010-3-2 HAS CUTOUT FOR LIFT TRANSDUCER

CESSNA 310J

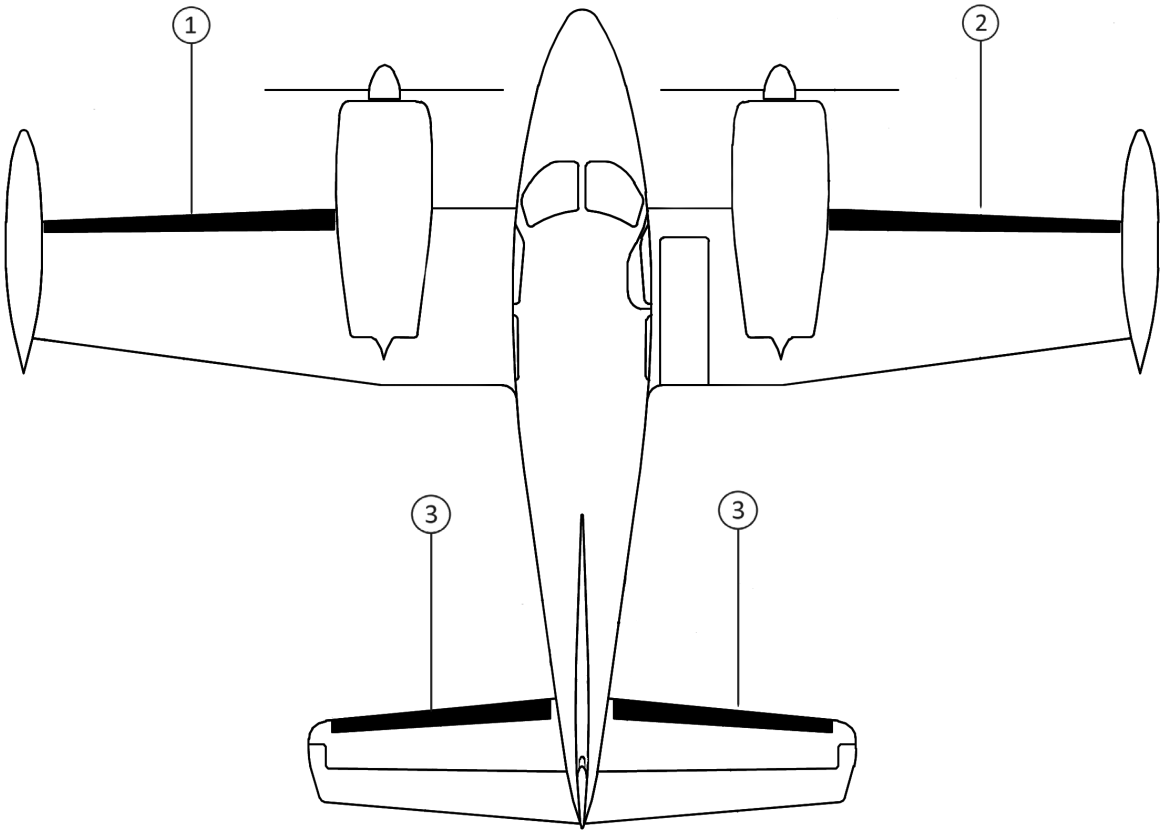

CESSNA 310K

STANDARD DE-ICE BOOTS

POSITION ID	GOODRICH PART NUMBER	AIRCRAFT OEM P/N	DESCRIPTION	QTY PER AIRCRAFT	WT
1	29S5D2010-1-1		NACELLE-TIP LH TTS DE-ICE BOOT	1	4.3
2	29S5D2010-1-2		NACELLE-TIP RH TTS DE-ICE BOOT	1	4.4
2	29S5D2010-3-2*		NACELLE-TIP RH TTS DE-ICE BOOT	1	4.4
3	29S5D2010-2-1		HORIZONTAL STABILIZER LH/RH TTS DE-ICE BOOT	2	3.6

TYPE 29 SEWN DE-ICER PROVIDES HIGHER DURABILITY THAN TYPE 23 TUBE TYPE DESIGN
*29S5D2010-3-2 HAS CUTOUT FOR LIFT TRANSDUCER

SUPERSEDED STANDARD DE-ICE BOOTS

POSITION ID	GOODRICH PART NUMBER	AIRCRAFT OEM P/N	DESCRIPTION	QTY PER AIRCRAFT	WT
1	23S-2010-1-1	0820517-9	NACELLE-TIP LH DE-ICE BOOT (SUPERSEDED BY P/N 29S5D2010-1-1)	1	4.6
2	23S-2010-1-2	0820517-10	NACELLE-TIP RH DE-ICE BOOT (SUPERSEDED BY P/N 29S5D2010-1-2)	1	4.7
3	23S-2010-2-1	0820517-11	HORIZONTAL STABILIZER LH/RH DE-ICE BOOT (SUPERSEDED BY P/N 29S5D2010-2-1)	2	3.7

FASTboot® DE-ICE BOOTS

POSITION ID	GOODRICH PART NUMBER	AIRCRAFT OEM P/N	DESCRIPTION	QTY PER AIRCRAFT	WT
1	P29S5D2010-1-1		FASTBOOT® NACELLE-TIP LH TTS DE-ICE BOOT	1	4.3
2	P29S5D2010-1-2		FASTBOOT® NACELLE-TIP RH TTS DE-ICE BOOT	1	4.4
2	P29S5D2010-3-2*		FASTBOOT® NACELLE-TIP RH TTS DE-ICE BOOT	1	4.4
3	P29S5D2010-2-1		FASTBOOT® HORIZONTAL STABILIZER LH/RH TTS DE-ICE BOOT	2	3.6

TYPE 29 SEWN DE-ICER PROVIDES HIGHER DURABILITY THAN TYPE 23 TUBE TYPE DESIGN
*P29S5D2010-3-2 HAS CUTOUT FOR LIFT TRANSDUCER

CESSNA 310K

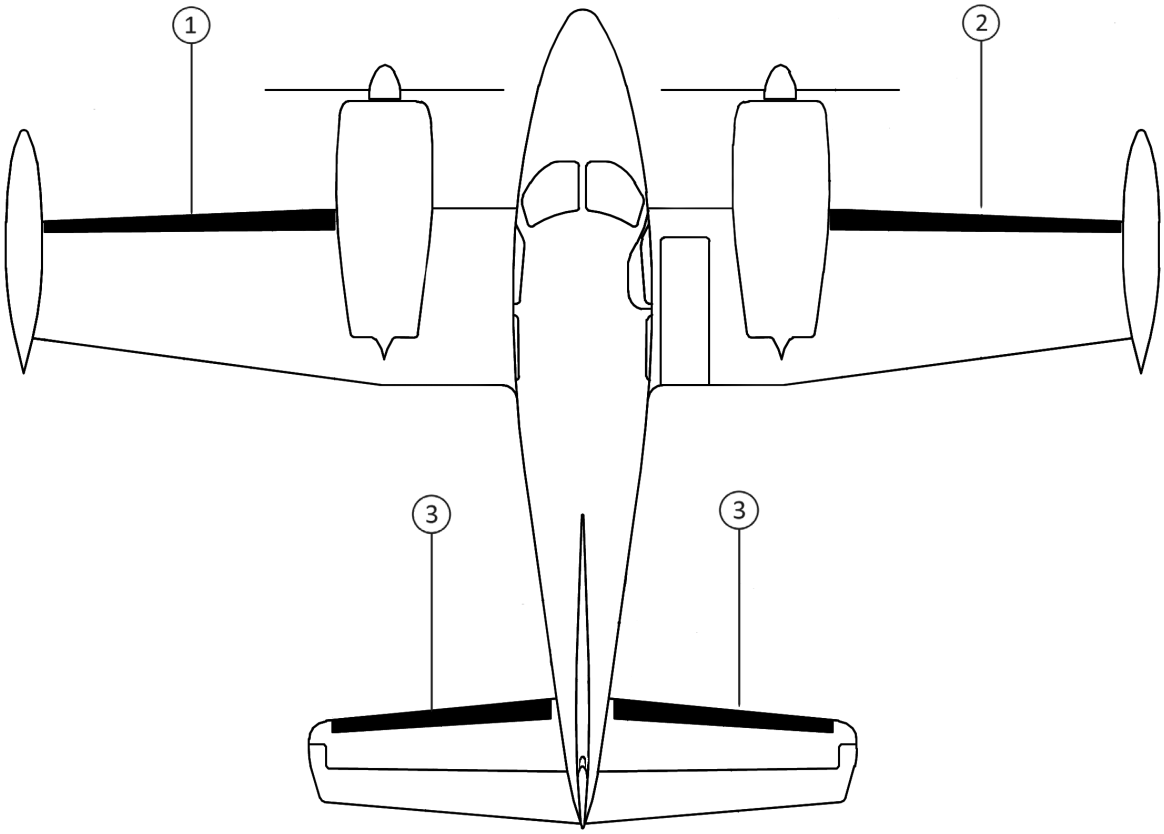

CESSNA 310L

STANDARD DE-ICE BOOTS

POSITION ID	GOODRICH PART NUMBER	AIRCRAFT OEM P/N	DESCRIPTION	QTY PER AIRCRAFT	WT
1	29S5D2010-1-1		NACELLE-TIP LH TTS DE-ICE BOOT	1	4.3
2	29S5D2010-1-2		NACELLE-TIP RH TTS DE-ICE BOOT	1	4.4
2	29S5D2010-3-2*		NACELLE-TIP RH TTS DE-ICE BOOT	1	4.4
3	29S5D2010-2-1		HORIZONTAL STABILIZER LH/RH TTS DE-ICE BOOT	2	3.6

TYPE 29 SEWN DE-ICER PROVIDES HIGHER DURABILITY THAN TYPE 23 TUBE TYPE DESIGN
*29S5D2010-3-2 HAS CUTOUT FOR LIFT TRANSDUCER

SUPERSEDED STANDARD DE-ICE BOOTS

POSITION ID	GOODRICH PART NUMBER	AIRCRAFT OEM P/N	DESCRIPTION	QTY PER AIRCRAFT	WT
1	23S-2010-1-1	0820517-9	NACELLE-TIP LH DE-ICE BOOT (SUPERSEDED BY P/N 29S5D2010-1-1)	1	4.6
2	23S-2010-1-2	0820517-10	NACELLE-TIP RH DE-ICE BOOT (SUPERSEDED BY P/N 29S5D2010-1-2)	1	4.7
3	23S-2010-2-1	0820517-11	HORIZONTAL STABILIZER LH/RH DE-ICE BOOT (SUPERSEDED BY P/N 29S5D2010-2-1)	2	3.7

FASTboot® DE-ICE BOOTS

POSITION ID	GOODRICH PART NUMBER	AIRCRAFT OEM P/N	DESCRIPTION	QTY PER AIRCRAFT	WT
1	P29S5D2010-1-1		FASTBOOT® NACELLE-TIP LH TTS DE-ICE BOOT	1	4.3
2	P29S5D2010-1-2		FASTBOOT® NACELLE-TIP RH TTS DE-ICE BOOT	1	4.4
2	P29S5D2010-3-2*		FASTBOOT® NACELLE-TIP RH TTS DE-ICE BOOT	1	4.4
3	P29S5D2010-2-1		FASTBOOT® HORIZONTAL STABILIZER LH/RH TTS DE-ICE BOOT	2	3.6

TYPE 29 SEWN DE-ICER PROVIDES HIGHER DURABILITY THAN TYPE 23 TUBE TYPE DESIGN
*P29S5D2010-3-2 HAS CUTOUT FOR LIFT TRANSDUCER

CESSNA 310L

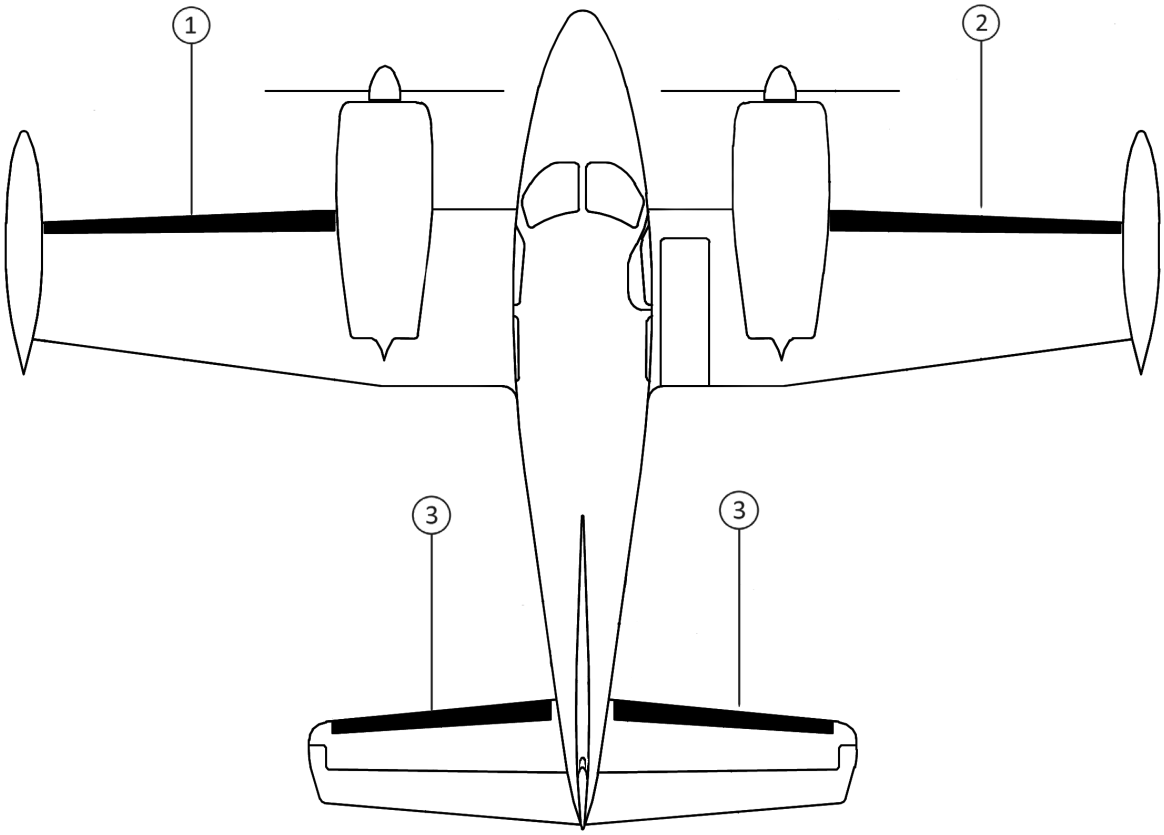

CESSNA 310N

STANDARD DE-ICE BOOTS

POSITION ID	GOODRICH PART NUMBER	AIRCRAFT OEM P/N	DESCRIPTION	QTY PER AIRCRAFT	WT
1	29S5D2010-1-1		NACELLE-TIP LH TTS DE-ICE BOOT	1	4.3
2	29S5D2010-1-2		NACELLE-TIP RH TTS DE-ICE BOOT	1	4.4
2	29S5D2010-3-2*		NACELLE-TIP RH TTS DE-ICE BOOT	1	4.4
3	29S5D2010-2-1		HORIZONTAL STABILIZER LH/RH TTS DE-ICE BOOT	2	3.6

TYPE 29 SEWN DE-ICER PROVIDES HIGHER DURABILITY THAN TYPE 23 TUBE TYPE DESIGN
*29S5D2010-3-2 HAS CUTOUT FOR LIFT TRANSDUCER

SUPERSEDED STANDARD DE-ICE BOOTS

POSITION ID	GOODRICH PART NUMBER	AIRCRAFT OEM P/N	DESCRIPTION	QTY PER AIRCRAFT	WT
1	23S-2010-1-1	0820517-9	NACELLE-TIP LH DE-ICE BOOT (SUPERSEDED BY P/N 29S5D2010-1-1)	1	4.6
2	23S-2010-1-2	0820517-10	NACELLE-TIP RH DE-ICE BOOT (SUPERSEDED BY P/N 29S5D2010-1-2)	1	4.7
3	23S-2010-2-1	0820517-11	HORIZONTAL STABILIZER LH/RH DE-ICE BOOT (SUPERSEDED BY P/N 29S5D2010-2-1)	2	3.7

FASTboot® DE-ICE BOOTS

POSITION ID	GOODRICH PART NUMBER	AIRCRAFT OEM P/N	DESCRIPTION	QTY PER AIRCRAFT	WT
1	P29S5D2010-1-1		FASTBOOT® NACELLE-TIP LH TTS DE-ICE BOOT	1	4.3
2	P29S5D2010-1-2		FASTBOOT® NACELLE-TIP RH TTS DE-ICE BOOT	1	4.4
2	P29S5D2010-3-2*		FASTBOOT® NACELLE-TIP RH TTS DE-ICE BOOT	1	4.4
3	P29S5D2010-2-1		FASTBOOT® HORIZONTAL STABILIZER LH/RH TTS DE-ICE BOOT	2	3.6

TYPE 29 SEWN DE-ICER PROVIDES HIGHER DURABILITY THAN TYPE 23 TUBE TYPE DESIGN
*P29S5D2010-3-2 HAS CUTOUT FOR LIFT TRANSDUCER

CESSNA 310N

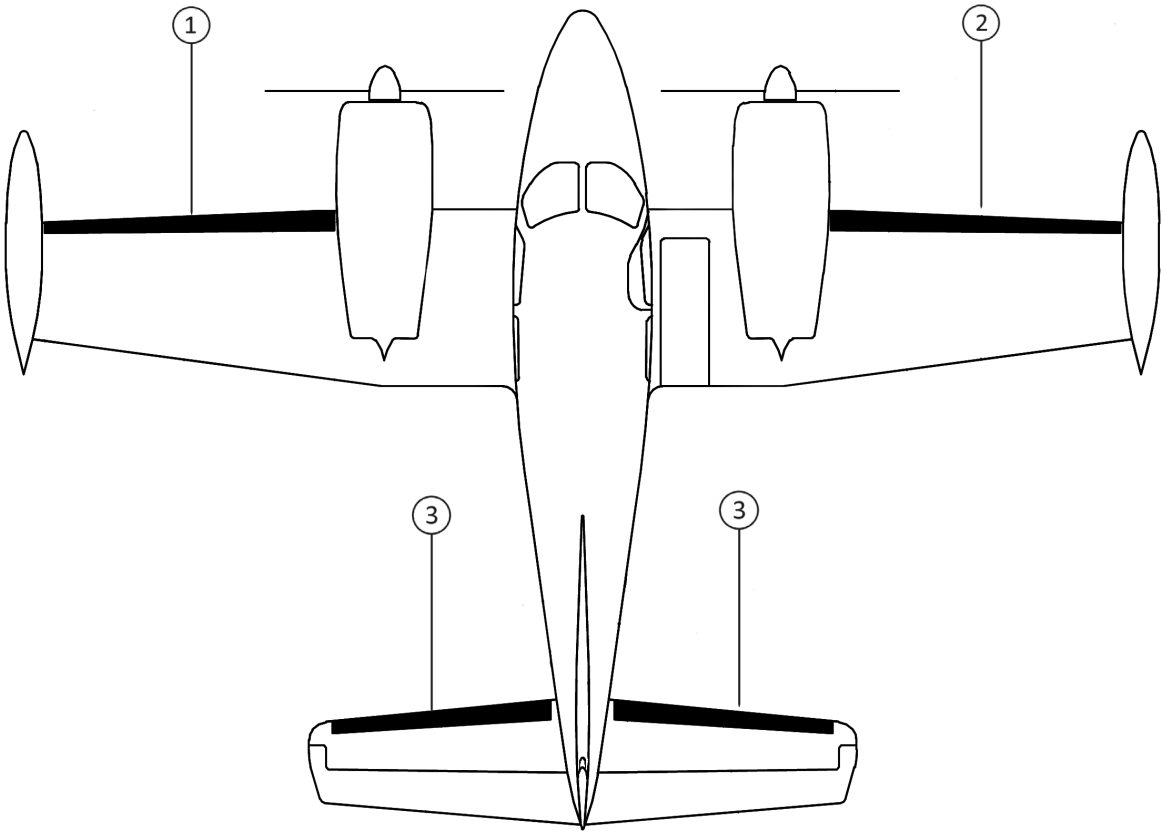

CESSNA 310P

STANDARD DE-ICE BOOTS

POSITION ID	GOODRICH PART NUMBER	AIRCRAFT OEM P/N	DESCRIPTION	QTY PER AIRCRAFT	WT
1	29S5D2010-1-1		NACELLE-TIP LH TTS DE-ICE BOOT	1	4.3
2	29S5D2010-1-2		NACELLE-TIP RH TTS DE-ICE BOOT	1	4.4
2	29S5D2010-3-2*		NACELLE-TIP RH TTS DE-ICE BOOT	1	4.4
3	29S5D2010-2-1		HORIZONTAL STABILIZER LH/RH TTS DE-ICE BOOT	2	3.6

TYPE 29 SEWN DE-ICER PROVIDES HIGHER DURABILITY THAN TYPE 23 TUBE TYPE DESIGN
*29S5D2010-3-2 HAS CUTOUT FOR LIFT TRANSDUCER

SUPERSEDED STANDARD DE-ICE BOOTS

POSITION ID	GOODRICH PART NUMBER	AIRCRAFT OEM P/N	DESCRIPTION	QTY PER AIRCRAFT	WT
1	23S-2010-1-1	0820517-9	NACELLE-TIP LH DE-ICE BOOT (SUPERSEDED BY P/N 29S5D2010-1-1)	1	4.6
2	23S-2010-1-2	0820517-10	NACELLE-TIP RH DE-ICE BOOT (SUPERSEDED BY P/N 29S5D2010-1-2)	1	4.7
3	23S-2010-2-1	0820517-11	HORIZONTAL STABILIZER LH/RH DE-ICE BOOT (SUPERSEDED BY P/N 29S5D2010-2-1)	2	3.7

FASTboot® DE-ICE BOOTS

POSITION ID	GOODRICH PART NUMBER	AIRCRAFT OEM P/N	DESCRIPTION	QTY PER AIRCRAFT	WT
1	P29S5D2010-1-1		FASTBOOT® NACELLE-TIP LH TTS DE-ICE BOOT	1	4.3
2	P29S5D2010-1-2		FASTBOOT® NACELLE-TIP RH TTS DE-ICE BOOT	1	4.4
2	P29S5D2010-3-2*		FASTBOOT® NACELLE-TIP RH TTS DE-ICE BOOT	1	4.4
3	P29S5D2010-2-1		FASTBOOT® HORIZONTAL STABILIZER LH/RH TTS DE-ICE BOOT	2	3.6

TYPE 29 SEWN DE-ICER PROVIDES HIGHER DURABILITY THAN TYPE 23 TUBE TYPE DESIGN
*P29S5D2010-3-2 HAS CUTOUT FOR LIFT TRANSDUCER

CESSNA 310P

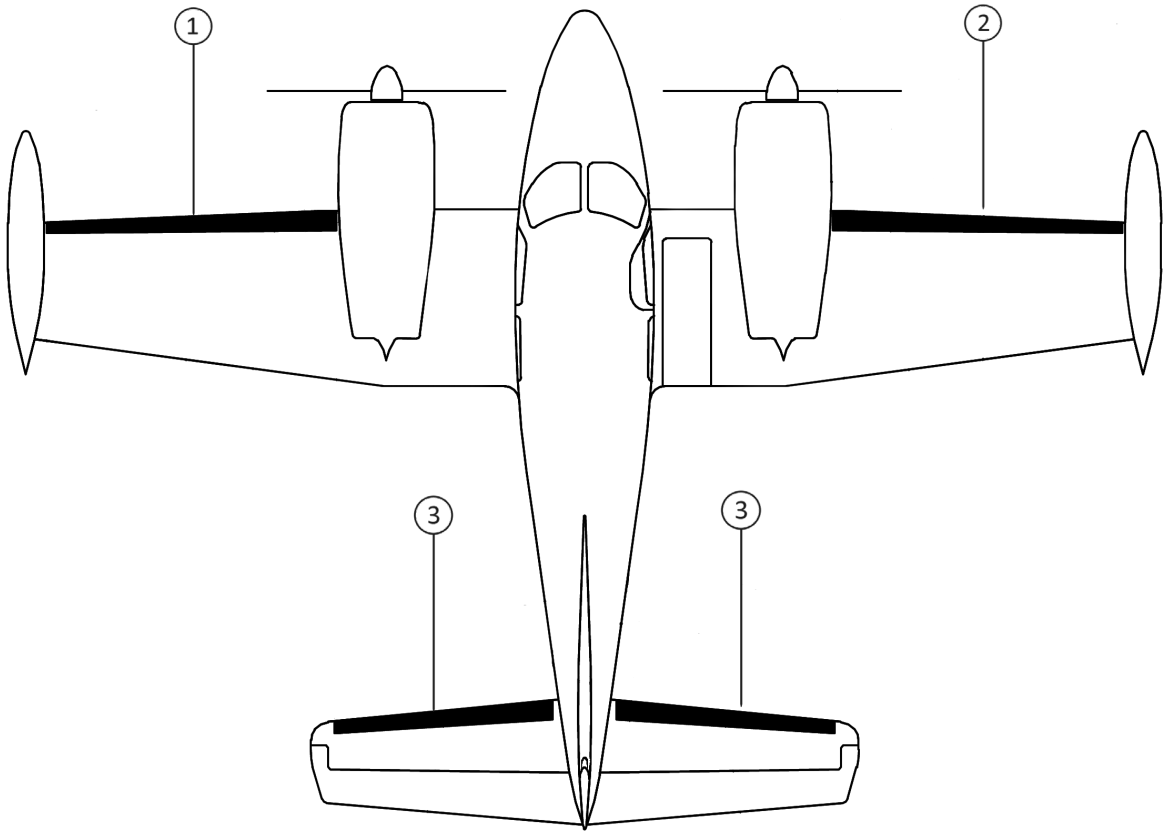

CESSNA 310Q

STANDARD DE-ICE BOOTS

POSITION ID	GOODRICH PART NUMBER	AIRCRAFT OEM P/N	DESCRIPTION	QTY PER AIRCRAFT	WT
1	29S5D2010-1-1		NACELLE-TIP LH TTS DE-ICE BOOT	1	4.3
2	29S5D2010-1-2		NACELLE-TIP RH TTS DE-ICE BOOT	1	4.4
2	29S5D2010-3-2*		NACELLE-TIP RH TTS DE-ICE BOOT	1	4.4
3	29S5D2010-2-1		HORIZONTAL STABILIZER LH/RH TTS DE-ICE BOOT	2	3.6

TYPE 29 SEWN DE-ICER PROVIDES HIGHER DURABILITY THAN TYPE 23 TUBE TYPE DESIGN
*29S5D2010-3-2 HAS CUTOUT FOR LIFT TRANSDUCER

SUPERSEDED STANDARD DE-ICE BOOTS

POSITION ID	GOODRICH PART NUMBER	AIRCRAFT OEM P/N	DESCRIPTION	QTY PER AIRCRAFT	WT
1	23S-2010-1-1	0820517-9	NACELLE-TIP LH DE-ICE BOOT (SUPERSEDED BY P/N 29S5D2010-1-1)	1	4.6
2	23S-2010-1-2	0820517-10	NACELLE-TIP RH DE-ICE BOOT (SUPERSEDED BY P/N 29S5D2010-1-2)	1	4.7
3	23S-2010-2-1	0820517-11	HORIZONTAL STABILIZER LH/RH DE-ICE BOOT (SUPERSEDED BY P/N 29S5D2010-2-1)	2	3.7

FASTboot® DE-ICE BOOTS

POSITION ID	GOODRICH PART NUMBER	AIRCRAFT OEM P/N	DESCRIPTION	QTY PER AIRCRAFT	WT
1	P29S5D2010-1-1		FASTBOOT® NACELLE-TIP LH TTS DE-ICE BOOT	1	4.3
2	P29S5D2010-1-2		FASTBOOT® NACELLE-TIP RH TTS DE-ICE BOOT	1	4.4
2	P29S5D2010-3-2*		FASTBOOT® NACELLE-TIP RH TTS DE-ICE BOOT	1	4.4
3	P29S5D2010-2-1		FASTBOOT® HORIZONTAL STABILIZER LH/RH TTS DE-ICE BOOT	2	3.6

TYPE 29 SEWN DE-ICER PROVIDES HIGHER DURABILITY THAN TYPE 23 TUBE TYPE DESIGN
*P29S5D2010-3-2 HAS CUTOUT FOR LIFT TRANSDUCER

CESSNA 310Q

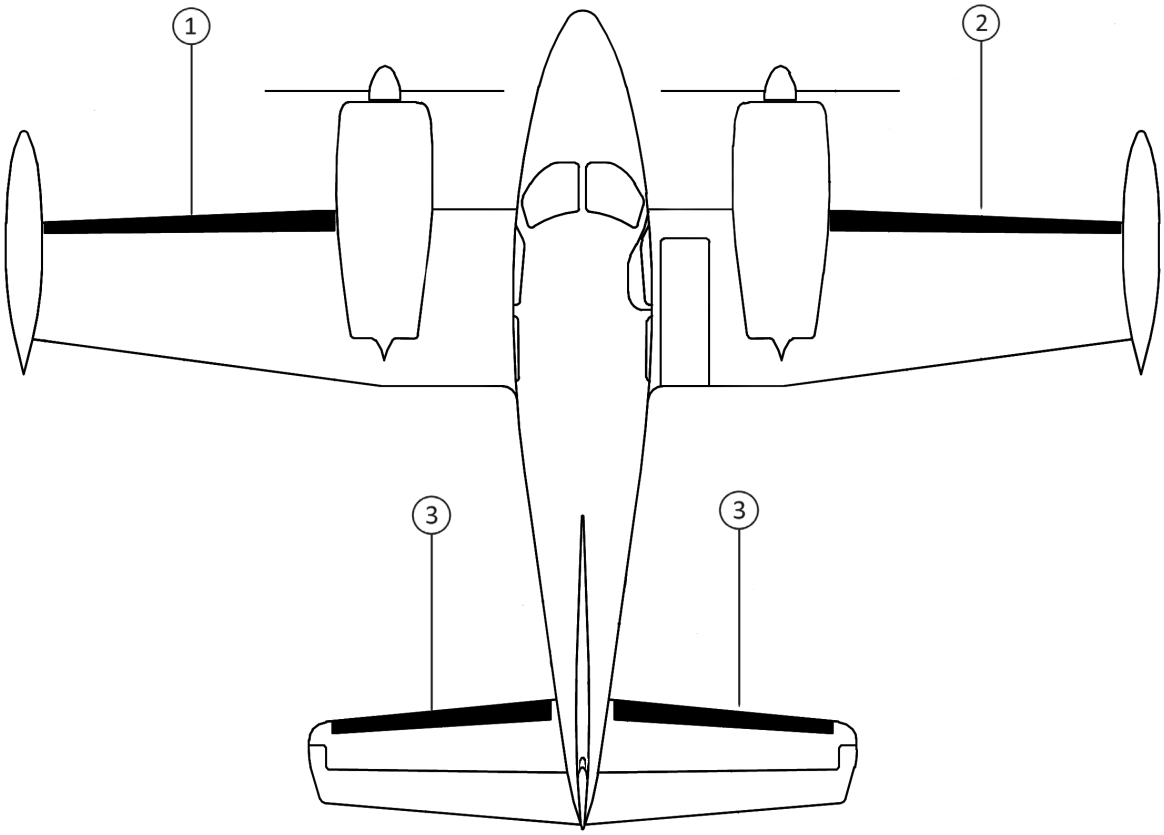

CESSNA 310R UP TO R0800

STANDARD DE-ICE BOOTS

POSITION ID	GOODRICH PART NUMBER	AIRCRAFT OEM P/N	DESCRIPTION	QTY PER AIRCRAFT	WT
1	29S5D2010-1-1		NACELLE-TIP LH TTS DE-ICE BOOT	1	4.3
2	29S5D2010-1-2		NACELLE-TIP RH TTS DE-ICE BOOT	1	4.4
2	29S5D2010-3-2*		NACELLE-TIP RH TTS DE-ICE BOOT	1	4.4
3	29S5D2010-2-1		HORIZONTAL STABILIZER LH/RH TTS DE-ICE BOOT	2	3.6

TYPE 29 SEWN DE-ICER PROVIDES HIGHER DURABILITY THAN TYPE 23 TUBE TYPE DESIGN
*29S5D2010-3-2 HAS CUTOUT FOR LIFT TRANSDUCER

SUPERSEDED STANDARD DE-ICE BOOTS

POSITION ID	GOODRICH PART NUMBER	AIRCRAFT OEM P/N	DESCRIPTION	QTY PER AIRCRAFT	WT
1	23S-2010-1-1	0820517-9	NACELLE-TIP LH DE-ICE BOOT (SUPERSEDED BY P/N 29S5D2010-1-1)	1	4.6
2	23S-2010-1-2	0820517-10	NACELLE-TIP RH DE-ICE BOOT (SUPERSEDED BY P/N 29S5D2010-1-2)	1	4.7
3	23S-2010-2-1	0820517-11	HORIZONTAL STABILIZER LH/RH DE-ICE BOOT (SUPERSEDED BY P/N 29S5D2010-2-1)	2	3.7

FASTboot® DE-ICE BOOTS

POSITION ID	GOODRICH PART NUMBER	AIRCRAFT OEM P/N	DESCRIPTION	QTY PER AIRCRAFT	WT
1	P29S5D2010-1-1		FASTBOOT® NACELLE-TIP LH TTS DE-ICE BOOT	1	4.3
2	P29S5D2010-1-2		FASTBOOT® NACELLE-TIP RH TTS DE-ICE BOOT	1	4.4
2	P29S5D2010-3-2*		FASTBOOT® NACELLE-TIP RH TTS DE-ICE BOOT	1	4.4
3	P29S5D2010-2-1		FASTBOOT® HORIZONTAL STABILIZER LH/RH TTS DE-ICE BOOT	2	3.6

TYPE 29 SEWN DE-ICER PROVIDES HIGHER DURABILITY THAN TYPE 23 TUBE TYPE DESIGN
*P29S5D2010-3-2 HAS CUTOUT FOR LIFT TRANSDUCER

CESSNA 310R UP TO R0800

CESSNA 310R UP TO R0800

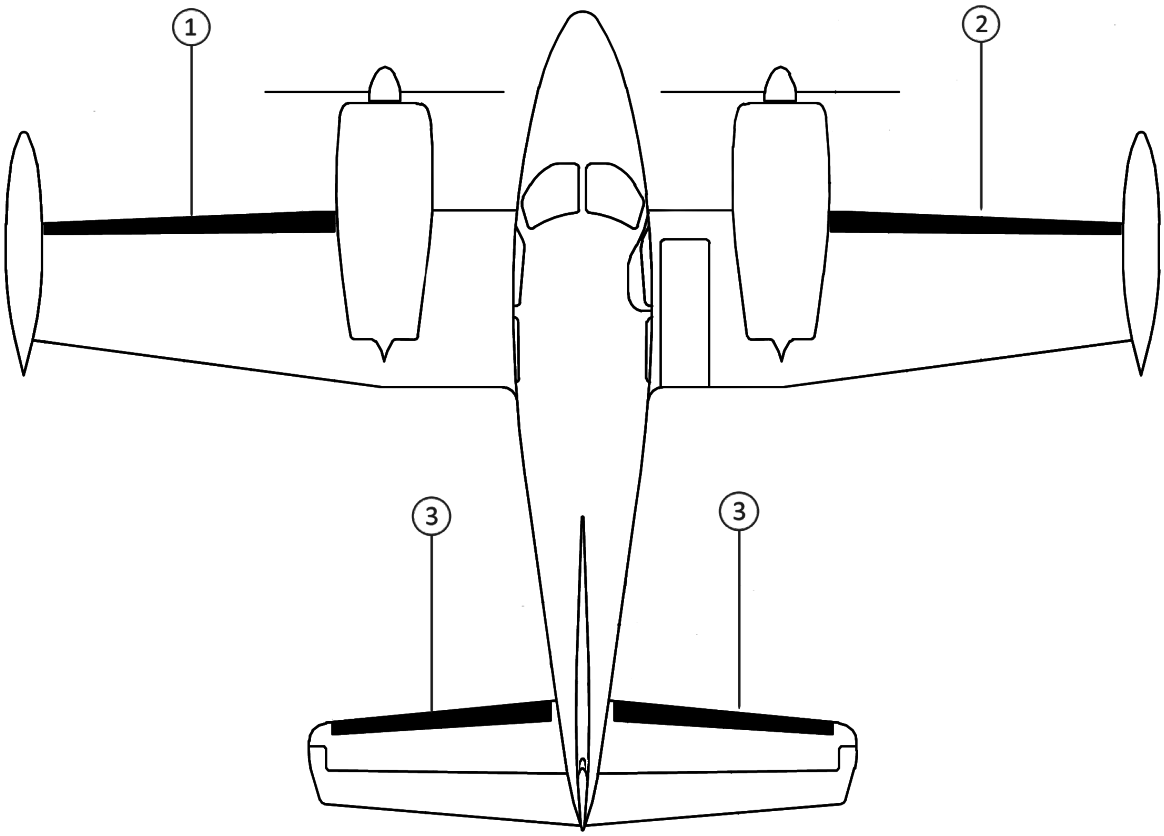

CESSNA 310R R0801 & UP

STANDARD DE-ICE BOOTS

POSITION ID	GOODRICH PART NUMBER	AIRCRAFT OEM P/N	DESCRIPTION	QTY PER AIRCRAFT	WT
1	27S-7D5070-29		FUSELAGE-NACELLE LH DE-ICE BOOT	1	0.9
2	27S-7D5070-30		FUSELAGE-NACELLE RH DE-ICE BOOT	1	0.9
3	27S-7D5070-03		NACELLE-TIP LH DE-ICE BOOT	1	3.3
4	27S-7D5070-04		NACELLE-TIP RH DE-ICE BOOT	1	3.3
5	27S-7D5070-11		HORIZONTAL STABILIZER LH/RH DE-ICE BOOT	2	2.2
6	27S-7D5070-13		VERTICAL STABILIZER DE-ICE BOOT	1	1.2

FASTboot® DE-ICE BOOTS

POSITION ID	GOODRICH PART NUMBER	AIRCRAFT OEM P/N	DESCRIPTION	QTY PER AIRCRAFT	WT
1	P27S-7D5070-29		FASTBOOT® FUSELAGE-NACELLE LH DE-ICE BOOT	1	0.9
2	P27S-7D5070-30		FASTBOOT® FUSELAGE-NACELLE RH DE-ICE BOOT	1	0.9
3	P27S-7D5070-03		FASTBOOT® NACELLE-TIP LH DE-ICE BOOT	1	3.3
4	P27S-7D5070-04		FASTBOOT® NACELLE-TIP RH DE-ICE BOOT	1	3.3
5	P27S-7D5070-11		FASTBOOT® HORIZONTAL STABILIZER LH/RH DE-ICE BOOT	2	2.2
6	P27S-7D5070-13		FASTBOOT® VERTICAL STABILIZER DE-ICE BOOT	1	1.2

CESSNA 310R R0801 & UP

CESSNA 310R R0801 & UP

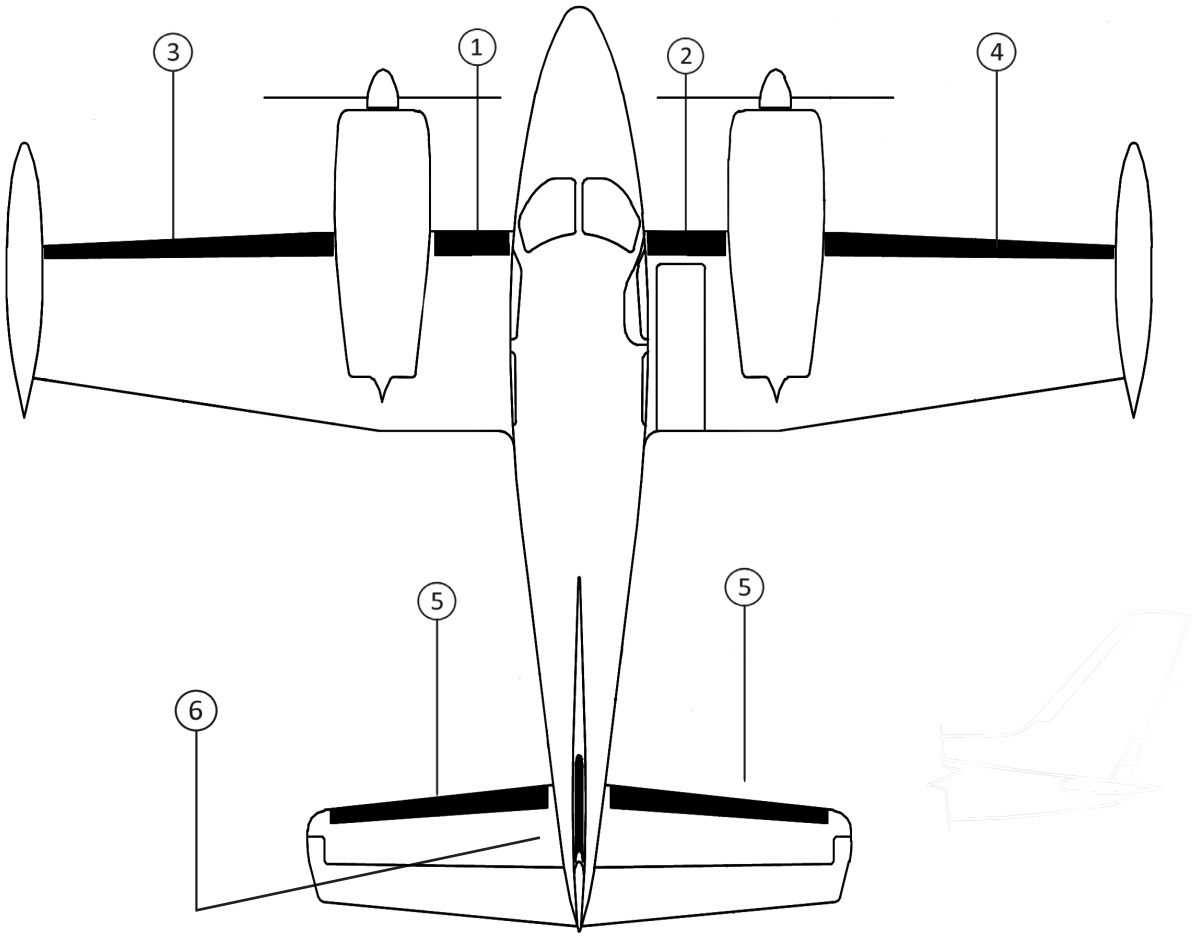

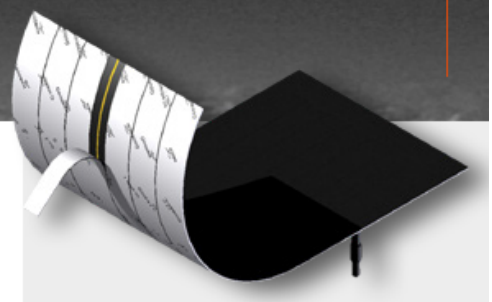

GOODRICH FASTBOOT® PNEUMATIC DE-ICERS

PROVEN PERFORMANCE

Over 20 years experience manufacturing and installing Pressure Sensitive Adhesive (PSA) de-icers

Collins Aerospace manufactures Goodrich pneumatic de-icing boots with our patented FASTboot adhesive system, which saves you time and improves aircraft readiness.

Goodrich FASTboot pneumatic de-icers take the guess work out of de-icer installation. The pre-applied adhesive provides a smooth and consistent de-icer bond at a fraction of the time needed for application of standard de-icers. Simply add the primer to the clean leading-edge surface and allow a five-minute dry time. Following the approved installation procedure, peel and stick the pneumatic de-icer to the leading edge of your aircraft.

KEY BENEFITS/FEATURES

- Reduces installation time
- FASTboot de-icers can be flown immediately
- De-icers can be inflated two hours after installation
- Reduces hazardous waste through pre-applied adhesive
- Initial installation guarantee

collinsaerospace.com/deicing

Collins Aerospace

CESSNA 320 (SKYNIGHT)

STANDARD DE-ICE BOOTS

POSITION ID	GOODRICH PART NUMBER	AIRCRAFT OEM P/N	DESCRIPTION	QTY PER AIRCRAFT	WT
1	23S-2010-6-1		NACELLE-TIP LH DE-ICE BOOT	1	4.6
2	23S-2010-6-2		NACELLE-TIP RH DE-ICE BOOT	1	4.7
3	29S5D2010-2-1		HORIZONTAL STABILIZER LH/RH TTS DE-ICE BOOT	2	3.6

TYPE 29 SEWN DE-ICER PROVIDES HIGHER DURABILITY THAN TYPE 23 TUBE TYPE DESIGN

SUPERSEDED STANDARD DE-ICE BOOTS

POSITION ID	GOODRICH PART NUMBER	AIRCRAFT OEM P/N	DESCRIPTION	QTY PER AIRCRAFT	WT
3	23S-2010-2-1		HORIZONTAL STABILIZER LH/RH DE-ICE BOOT (SUPERSEDED BY P/N 29S5D2010-2-1)	1	3.7

FASTboot® DE-ICE BOOTS

POSITION ID	GOODRICH PART NUMBER	AIRCRAFT OEM P/N	DESCRIPTION	QTY PER AIRCRAFT	WT
3	P29S5D2010-2-1		FASTBOOT® HORIZONTAL STABILIZER LH/RH DE-ICE BOOT	2	3.6

TYPE 29 SEWN DE-ICER PROVIDES HIGHER DURABILITY THAN TYPE 23 TUBE TYPE DESIGN

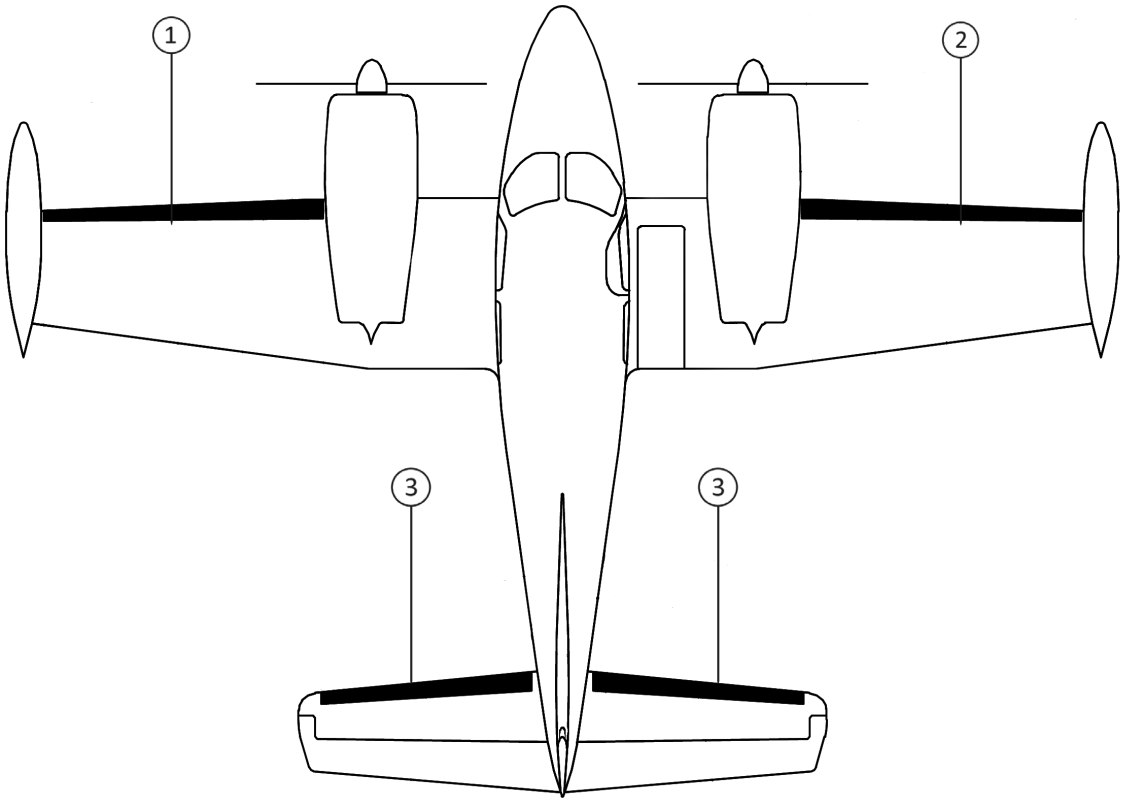

CESSNA 320A (SKYNIGHT)

STANDARD DE-ICE BOOTS

POSITION ID	GOODRICH PART NUMBER	AIRCRAFT OEM P/N	DESCRIPTION	QTY PER AIRCRAFT	WT
1	23S-2010-6-1		NACELLE-TIP LH DE-ICE BOOT	1	4.6
2	23S-2010-6-2		NACELLE-TIP RH DE-ICE BOOT	1	4.7
3	29S5D2010-2-1		HORIZONTAL STABILIZER LH/RH TTS DE-ICE BOOT	2	3.6

TYPE 29 SEWN DE-ICER PROVIDES HIGHER DURABILITY THAN TYPE 23 TUBE TYPE DESIGN

SUPERSEDED STANDARD DE-ICE BOOTS

POSITION ID	GOODRICH PART NUMBER	AIRCRAFT OEM P/N	DESCRIPTION	QTY PER AIRCRAFT	WT
3	23S-2010-2-1		HORIZONTAL STABILIZER LH/RH DE-ICE BOOT (SUPERSEDED BY P/N 29S5D2010-2-1)	1	3.7

FASTboot® DE-ICE BOOTS

POSITION ID	GOODRICH PART NUMBER	AIRCRAFT OEM P/N	DESCRIPTION	QTY PER AIRCRAFT	WT
3	P29S5D2010-2-1		FASTBOOT® HORIZONTAL STABILIZER LH/RH TTS DE-ICE BOOT	2	3.6

TYPE 29 SEWN DE-ICER PROVIDES HIGHER DURABILITY THAN TYPE 23 TUBE TYPE DESIGN

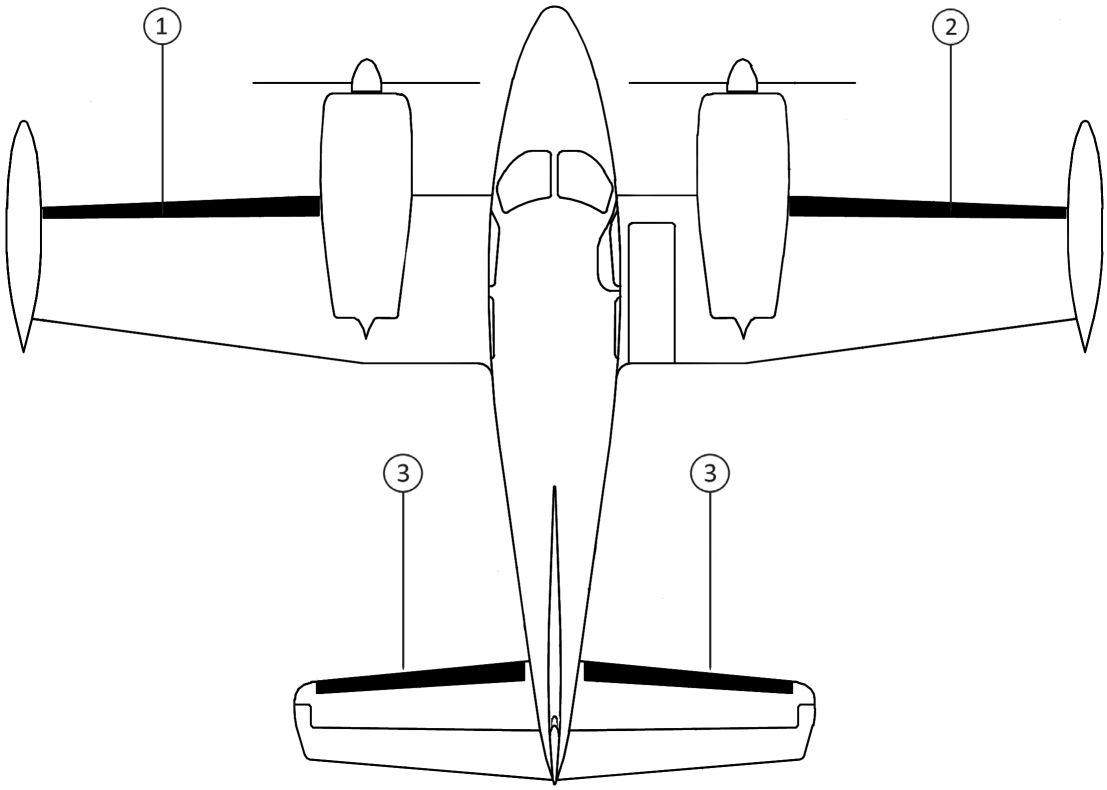

CESSNA 320B (SKYNIGHT)

STANDARD DE-ICE BOOTS

POSITION ID	GOODRICH PART NUMBER	AIRCRAFT OEM P/N	DESCRIPTION	QTY PER AIRCRAFT	WT
1	23S-2010-6-1		NACELLE-TIP LH DE-ICE BOOT	1	4.6
2	23S-2010-6-2		NACELLE-TIP RH DE-ICE BOOT	1	4.7
3	29S5D2010-2-1		HORIZONTAL STABILIZER LH/RH TTS DE-ICE BOOT	2	3.6

TYPE 29 SEWN DE-ICER PROVIDES HIGHER DURABILITY THAN TYPE 23 TUBE TYPE DESIGN

SUPERSEDED STANDARD DE-ICE BOOTS

POSITION ID	GOODRICH PART NUMBER	AIRCRAFT OEM P/N	DESCRIPTION	QTY PER AIRCRAFT	WT
3	23S-2010-2-1		HORIZONTAL STABILIZER LH/RH DE-ICE BOOT (SUPERSEDED BY P/N 29S5D2010-2-1)	1	3.7

FASTboot® DE-ICE BOOTS

POSITION ID	GOODRICH PART NUMBER	AIRCRAFT OEM P/N	DESCRIPTION	QTY PER AIRCRAFT	WT
3	P29S5D2010-2-1		FASTBOOT® HORIZONTAL STABILIZER LH/RH TTS DE-ICE BOOT	2	3.6

TYPE 29 SEWN DE-ICER PROVIDES HIGHER DURABILITY THAN TYPE 23 TUBE TYPE DESIGN

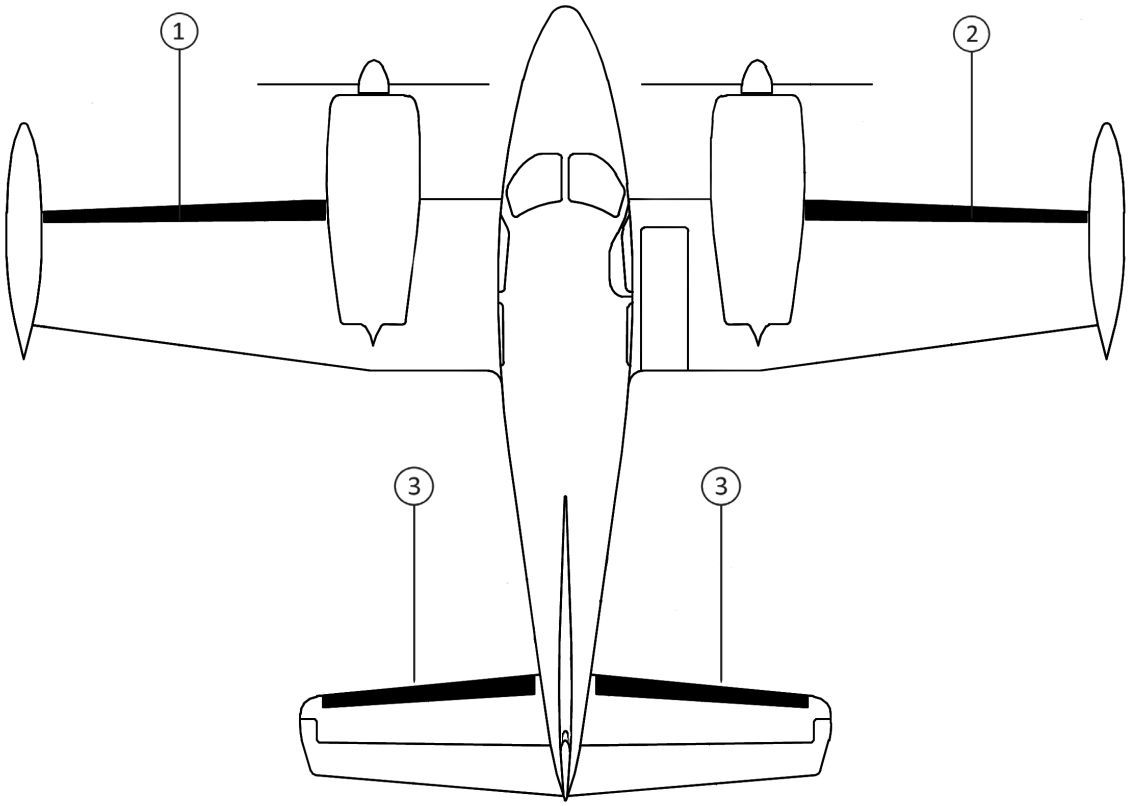

CESSNA 320C (SKYNIGHT)

STANDARD DE-ICE BOOTS

POSITION ID	GOODRICH PART NUMBER	AIRCRAFT OEM P/N	DESCRIPTION	QTY PER AIRCRAFT	WT
1	23S-2010-6-1		NACELLE-TIP LH DE-ICE BOOT	1	4.6
2	23S-2010-6-2		NACELLE-TIP RH DE-ICE BOOT	1	4.7
3	29S5D2010-2-1		HORIZONTAL STABILIZER LH/RH TTS DE-ICE BOOT	2	3.6

TYPE 29 SEWN DE-ICER PROVIDES HIGHER DURABILITY THAN TYPE 23 TUBE TYPE DESIGN

SUPERSEDED STANDARD DE-ICE BOOTS

POSITION ID	GOODRICH PART NUMBER	AIRCRAFT OEM P/N	DESCRIPTION	QTY PER AIRCRAFT	WT
3	23S-2010-2-1		HORIZONTAL STABILIZER LH/RH DE-ICE BOOT (SUPERSEDED BY P/N 29S5D2010-2-1)	1	3.7

FASTboot® DE-ICE BOOTS

POSITION ID	GOODRICH PART NUMBER	AIRCRAFT OEM P/N	DESCRIPTION	QTY PER AIRCRAFT	WT
3	P29S5D2010-2-1		FASTBOOT® HORIZONTAL STABILIZER LH/RH TTS DE-ICE BOOT	2	3.6

TYPE 29 SEWN DE-ICER PROVIDES HIGHER DURABILITY THAN TYPE 23 TUBE TYPE DESIGN

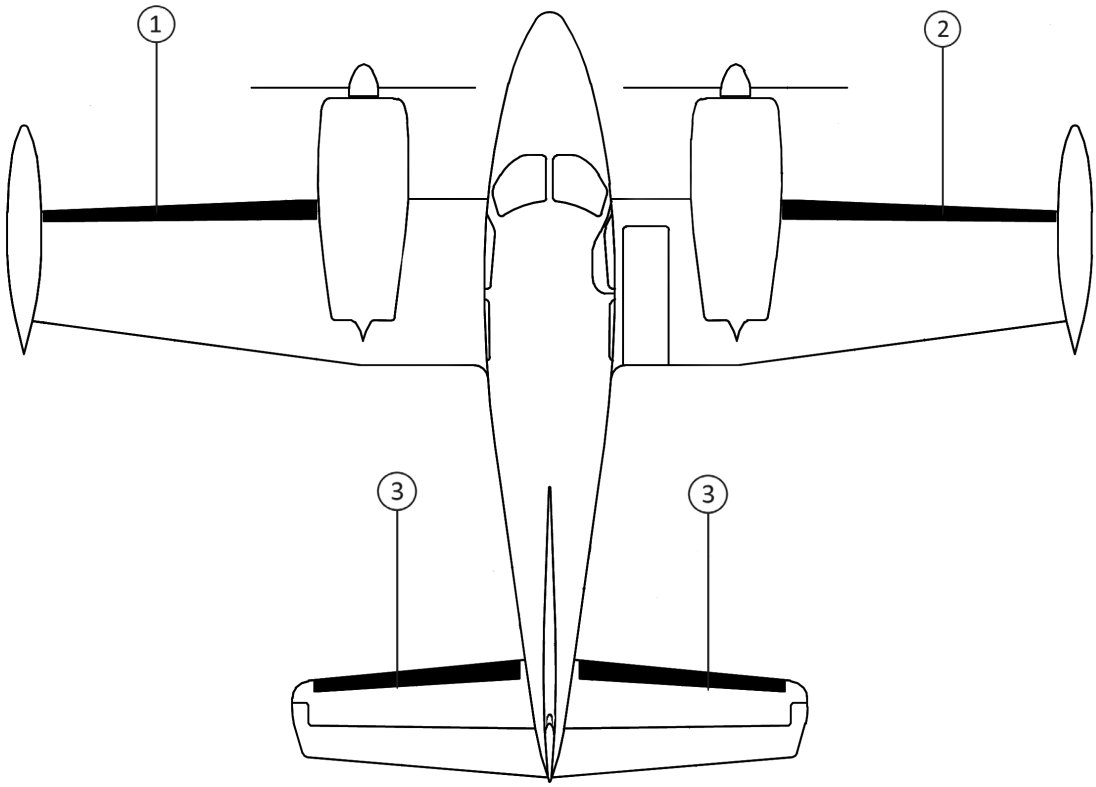

CESSNA 320D (EXECUTIVE SKYNIGHT)

STANDARD DE-ICE BOOTS

POSITION ID	GOODRICH PART NUMBER	AIRCRAFT OEM P/N	DESCRIPTION	QTY PER AIRCRAFT	WT
1	23S-2010-6-1		NACELLE-TIP LH DE-ICE BOOT	1	4.6
2	23S-2010-6-2		NACELLE-TIP RH DE-ICE BOOT	1	4.7
3	29S5D2010-2-1		HORIZONTAL STABILIZER LH/RH TTS DE-ICE BOOT	2	3.6

TYPE 29 SEWN DE-ICER PROVIDES HIGHER DURABILITY THAN TYPE 23 TUBE TYPE DESIGN

SUPERSEDED STANDARD DE-ICE BOOTS

POSITION ID	GOODRICH PART NUMBER	AIRCRAFT OEM P/N	DESCRIPTION	QTY PER AIRCRAFT	WT
3	23S-2010-2-1		HORIZONTAL STABILIZER LH/RH DE-ICE BOOT (SUPERSEDED BY P/N 29S5D2010-2-1)	1	3.7

FASTboot® DE-ICE BOOTS

POSITION ID	GOODRICH PART NUMBER	AIRCRAFT OEM P/N	DESCRIPTION	QTY PER AIRCRAFT	WT
3	P29S5D2010-2-1		FASTBOOT® HORIZONTAL STABILIZER LH/RH TTS DE-ICE BOOT	2	3.6

TYPE 29 SEWN DE-ICER PROVIDES HIGHER DURABILITY THAN TYPE 23 TUBE TYPE DESIGN

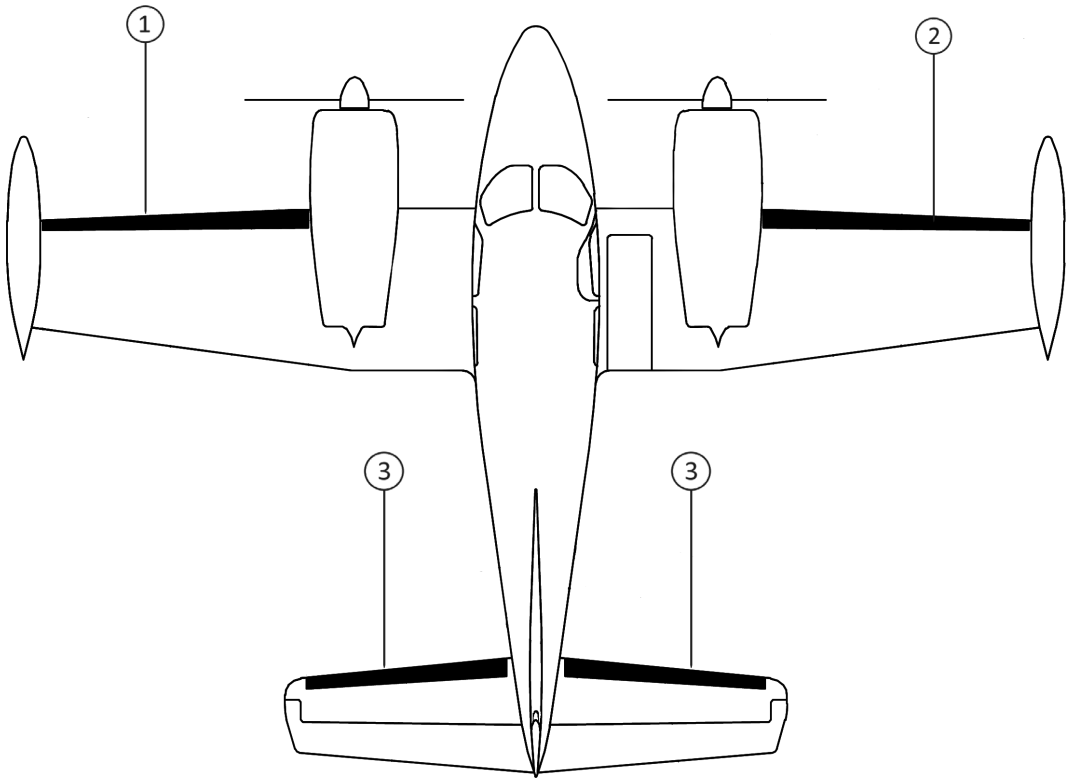

CESSNA 320E (EXECUTIVE SKYNIGHT)

STANDARD DE-ICE BOOTS

POSITION ID	GOODRICH PART NUMBER	AIRCRAFT OEM P/N	DESCRIPTION	QTY PER AIRCRAFT	WT
1	23S-2010-6-1		NACELLE-TIP LH DE-ICE BOOT	1	4.6
2	23S-2010-6-2		NACELLE-TIP RH DE-ICE BOOT	1	4.7
3	29S5D2010-2-1		HORIZONTAL STABILIZER LH/RH TTS DE-ICE BOOT	2	3.6

TYPE 29 SEWN DE-ICER PROVIDES HIGHER DURABILITY THAN TYPE 23 TUBE TYPE DESIGN

SUPERSEDED STANDARD DE-ICE BOOTS

POSITION ID	GOODRICH PART NUMBER	AIRCRAFT OEM P/N	DESCRIPTION	QTY PER AIRCRAFT	WT
3	23S-2010-2-1		HORIZONTAL STABILIZER LH/RH DE-ICE BOOT (SUPERSEDED BY P/N 29S5D2010-2-1)	1	3.7

FASTboot® DE-ICE BOOTS

POSITION ID	GOODRICH PART NUMBER	AIRCRAFT OEM P/N	DESCRIPTION	QTY PER AIRCRAFT	WT
3	P29S5D2010-2-1		FASTBOOT® HORIZONTAL STABILIZER LH/RH TTS DE-ICE BOOT	2	3.6

TYPE 29 SEWN DE-ICER PROVIDES HIGHER DURABILITY THAN TYPE 23 TUBE TYPE DESIGN

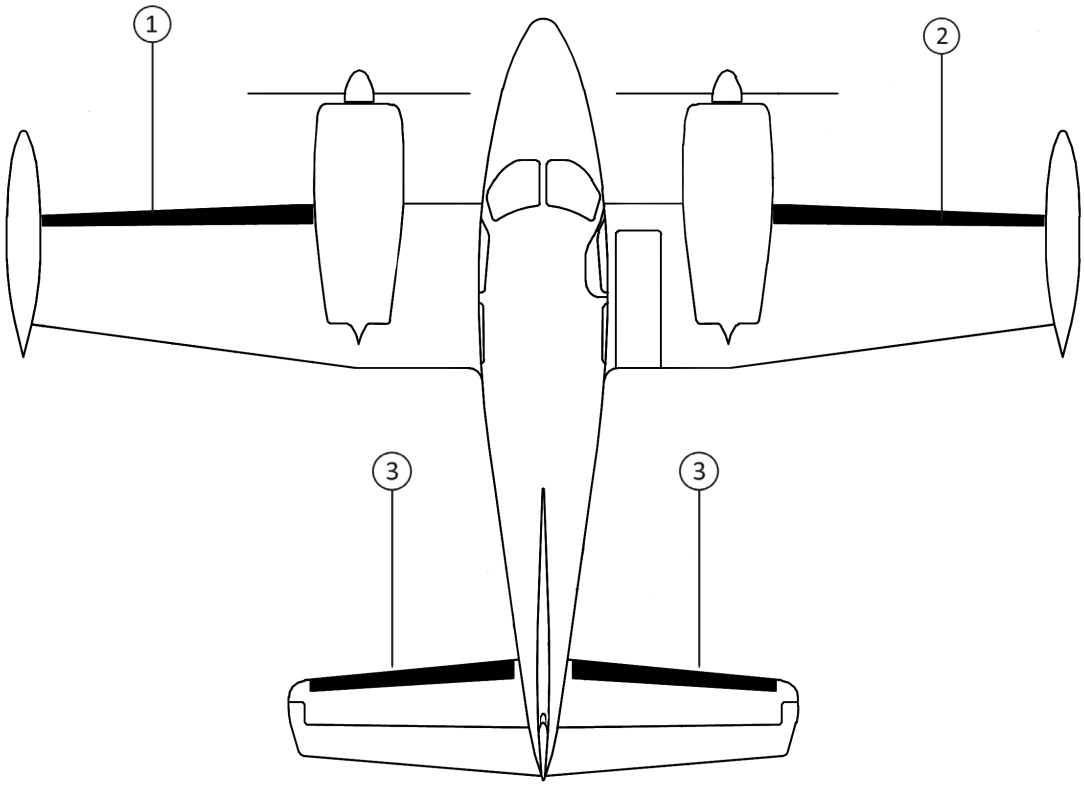

CESSNA 320F (EXECUTIVE SKYNIGHT)

STANDARD DE-ICE BOOTS

POSITION ID	GOODRICH PART NUMBER	AIRCRAFT OEM P/N	DESCRIPTION	QTY PER AIRCRAFT	WT
1	23S-2010-6-1		NACELLE-TIP LH DE-ICE BOOT	1	4.6
2	23S-2010-6-2		NACELLE-TIP RH DE-ICE BOOT	1	4.7
3	29S5D2010-2-1		HORIZONTAL STABILIZER LH/RH TTS DE-ICE BOOT	2	3.6

TYPE 29 SEWN DE-ICER PROVIDES HIGHER DURABILITY THAN TYPE 23 TUBE TYPE DESIGN

SUPERSEDED STANDARD DE-ICE BOOTS

POSITION ID	GOODRICH PART NUMBER	AIRCRAFT OEM P/N	DESCRIPTION	QTY PER AIRCRAFT	WT
3	23S-2010-2-1		HORIZONTAL STABILIZER LH/RH DE-ICE BOOT (SUPERSEDED BY P/N 29S5D2010-2-1)	1	3.7

FASTboot® DE-ICE BOOTS

POSITION ID	GOODRICH PART NUMBER	AIRCRAFT OEM P/N	DESCRIPTION	QTY PER AIRCRAFT	WT
3	P29S5D2010-2-1		FASTBOOT® HORIZONTAL STABILIZER LH/RH TTS DE-ICE BOOT	2	3.6

TYPE 29 SEWN DE-ICER PROVIDES HIGHER DURABILITY THAN TYPE 23 TUBE TYPE DESIGN

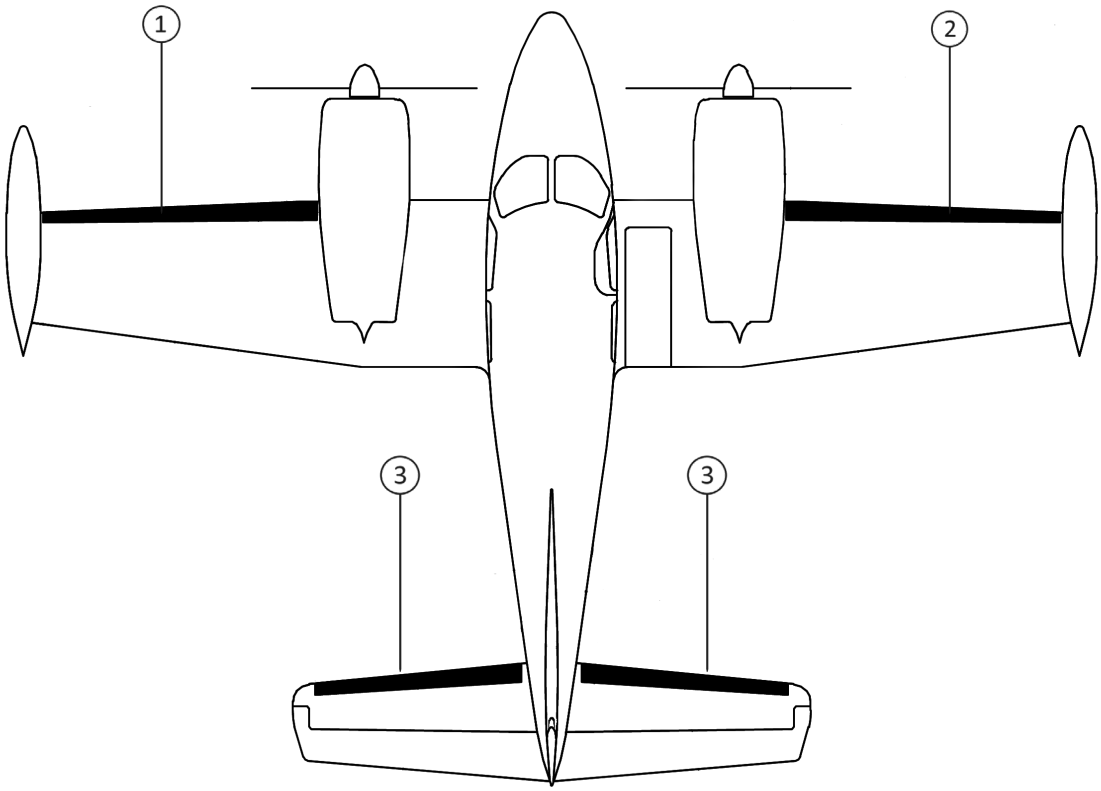

De-ice boot care products

DE-ICER PATCHES AND PIN HOLE KITS ALSO AVAILABLE

Aerospace Protectant™ (32 fl. oz.) P/N 74-451-237-32

Goodrich® Aerospace Protectant™

- Approved for use on all Goodrich de-icers
- Near 100 percent prevention of UV-caused slow fade
- Resistance to dust, soiling and staining
- Water-based formula is environmentally friendly
- Apply as needed – no surface stripping required

Aerospace Cleaner™ (32 fl. oz.) P/N 74-451-238-32

Goodrich® Aerospace Cleaner™

- Approved for use on all Goodrich de-icers
- Can be used on all water-safe materials
- Water-based formula is environmentally friendly
- Apply as needed – no surface stripping required
- Great for removing dirt, grime and bugs

AgeMaster® #1 P/N 74-451-127

AgeMaster® #1

- Rubber preservative that protects against weathering, ozone and ultraviolet rays
- Apply six months after new de-icer is installed
- Reapply every 150 flight hours (twice yearly)
- One quart covers approximately 90 sq. ft. (8.3 sq. m.)

ICEX®II - 6oz
ICEX®II - Pump
ICEX®II - Quart

ICEX®II

- Ice adhesion inhibitor that enhances de-icer performance
- Apply every 50 flight hours during icing season
- One quart covers approximately 400 sq. ft. (37 sq. m)

ShineMaster™ Prep P/N 74-451-179
ShineMaster™ P/N 74-451-178

ShineMaster™

- Cosmetic coating that provides a high-luster shine
- Clean de-icer with ShineMaster Prep before applying 2-3 light coats
- One pint covers approximately 200 sq. ft. (18.6 sq. m)
- Reapply as desired

Specifications subject to change without notice.

CESSNA 335

STANDARD DE-ICE BOOTS

POSITION ID	GOODRICH PART NUMBER	AIRCRAFT OEM P/N	DESCRIPTION	QTY PER AIRCRAFT	WT
1	27S-7D5070-51		FUSELAGE-NACELLE LH DE-ICE BOOT	1	1.1
2	27S-7D5070-52		FUSELAGE-NACELLE RH DE-ICE BOOT	1	1.1
3	27S-7D5070-03		NACELLE-TIP LH DE-ICE BOOT	1	3.3
4	27S-7D5070-04		NACELLE-TIP RH DE-ICE BOOT	1	3.3
5	27S-7D5070-11		HORIZONTAL STABILIZER LH/RH DE-ICE BOOT	2	2.2
6	27S-7D5070-13		VERTICAL STABILIZER DE-ICE BOOT	1	1.2

FASTboot® DE-ICE BOOTS

POSITION ID	GOODRICH PART NUMBER	AIRCRAFT OEM P/N	DESCRIPTION	QTY PER AIRCRAFT	WT
1	P27S-7D5070-51		FASTBOOT® FUSELAGE-NACELLE LH DE-ICE BOOT	1	1.1
2	P27S-7D5070-52		FASTBOOT® FUSELAGE-NACELLE RH DE-ICE BOOT	1	1.1
3	P27S-7D5070-03		FASTBOOT® NACELLE-TIP LH DE-ICE BOOT	1	3.3
4	P27S-7D5070-04		FASTBOOT® NACELLE-TIP RH DE-ICE BOOT	1	3.3
5	P27S-7D5070-11		FASTBOOT® HORIZONTAL STABILIZER LH/RH DE-ICE BOOT	2	2.2
6	P27S-7D5070-13		FASTBOOT® VERTICAL STABILIZER DE-ICE BOOT	1	1.2

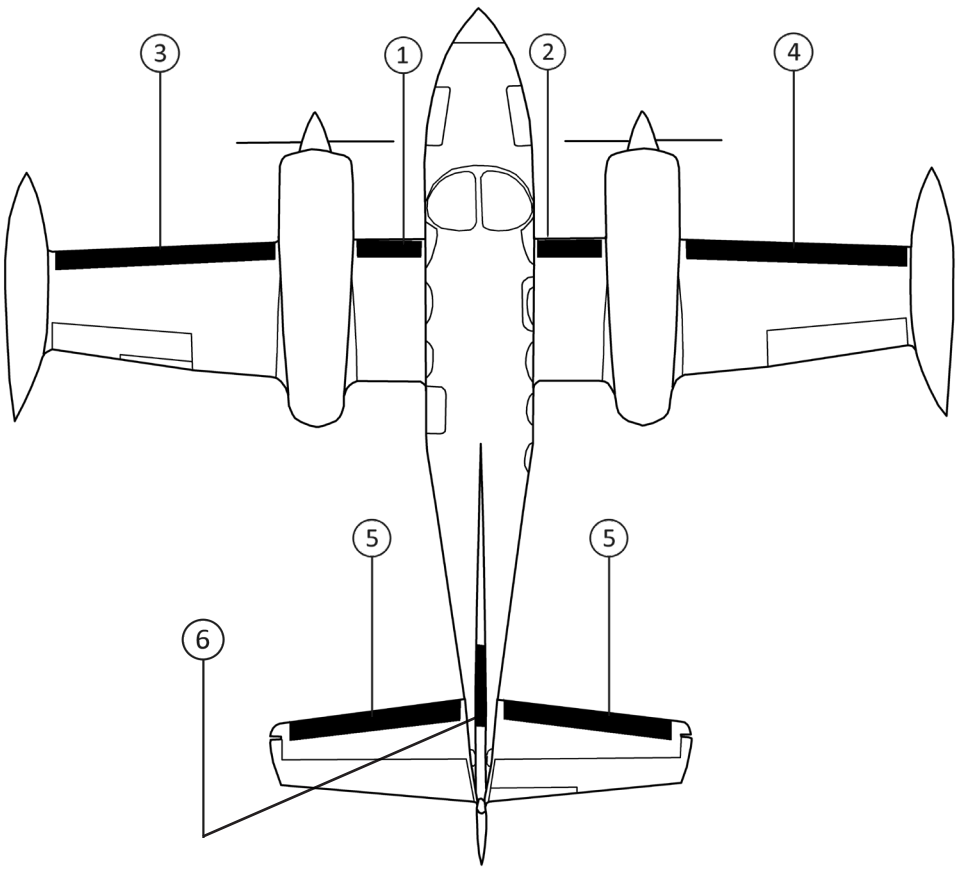

CESSNA 336 (SKYMASTER)

STANDARD DE-ICE BOOTS

POSITION ID	GOODRICH PART NUMBER	AIRCRAFT OEM P/N	DESCRIPTION	QTY PER AIRCRAFT	WT
1	23S-2054-1-1		FUSELAGE-LIGHT LH DE-ICE BOOT	1	5.5
2	23S-2054-1-2		FUSELAGE-LIGHT RH DE-ICE BOOT	1	5.6
3	23S-2054-2-1		LIGHT-TIP LH/RH DE-ICE BOOT	2	4.1
4	23S-2054-3-1		HORIZONTAL STABILIZER DE-ICE BOOT	1	4.9

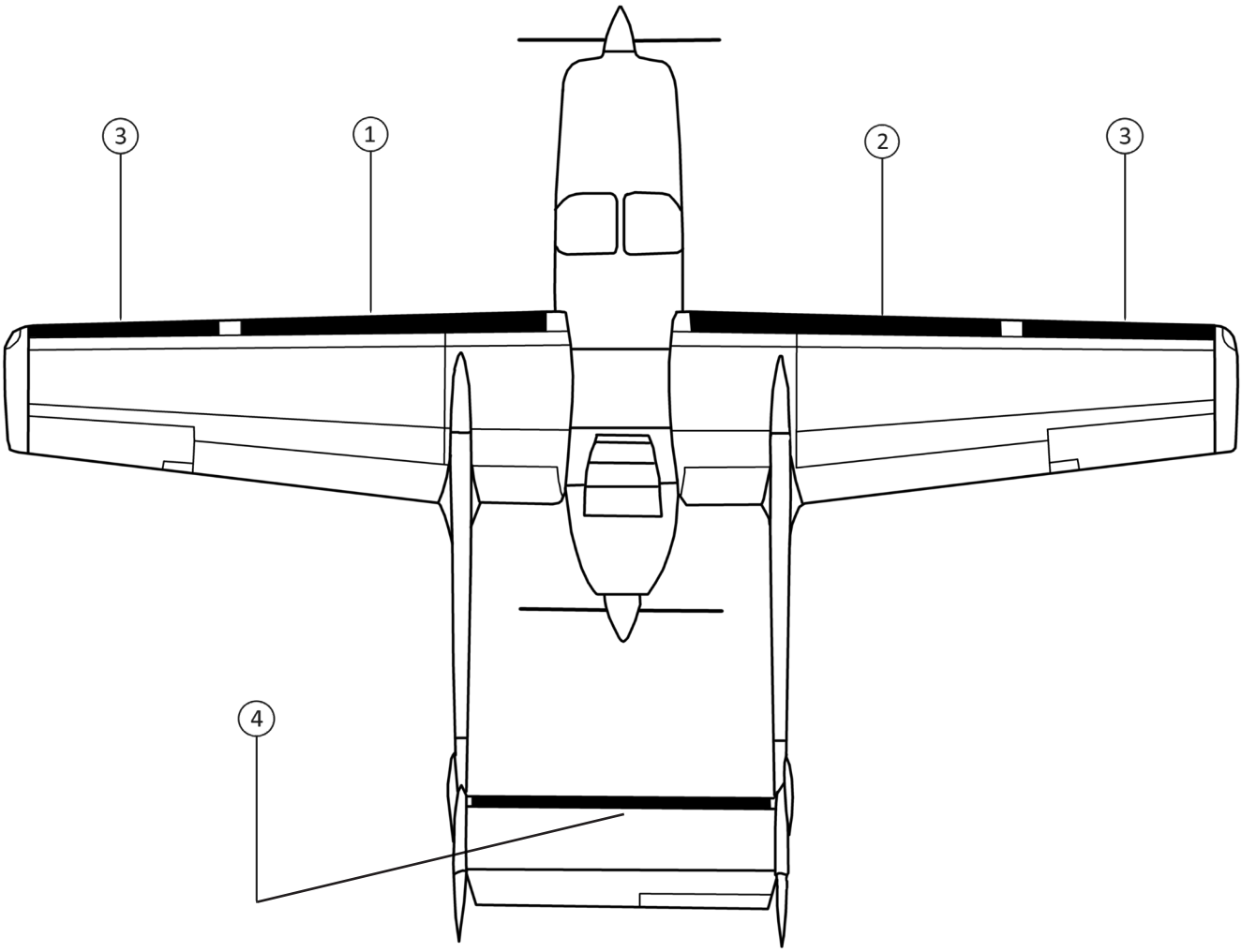

CESSNA 337 (SUPER SKYMASTER)

STANDARD DE-ICE BOOTS

POSITION ID	GOODRICH PART NUMBER	AIRCRAFT OEM P/N	DESCRIPTION	QTY PER AIRCRAFT	WT
1	23S-2054-1-1		FUSELAGE-LIGHT LH DE-ICE BOOT	1	5.5
2	23S-2054-1-2		FUSELAGE-LIGHT RH DE-ICE BOOT	1	5.6
3	23S-2054-2-1		LIGHT-TIP LH/RH DE-ICE BOOT	2	4.1
4	23S-2054-3-1		HORIZONTAL STABILIZER DE-ICE BOOT	1	4.9

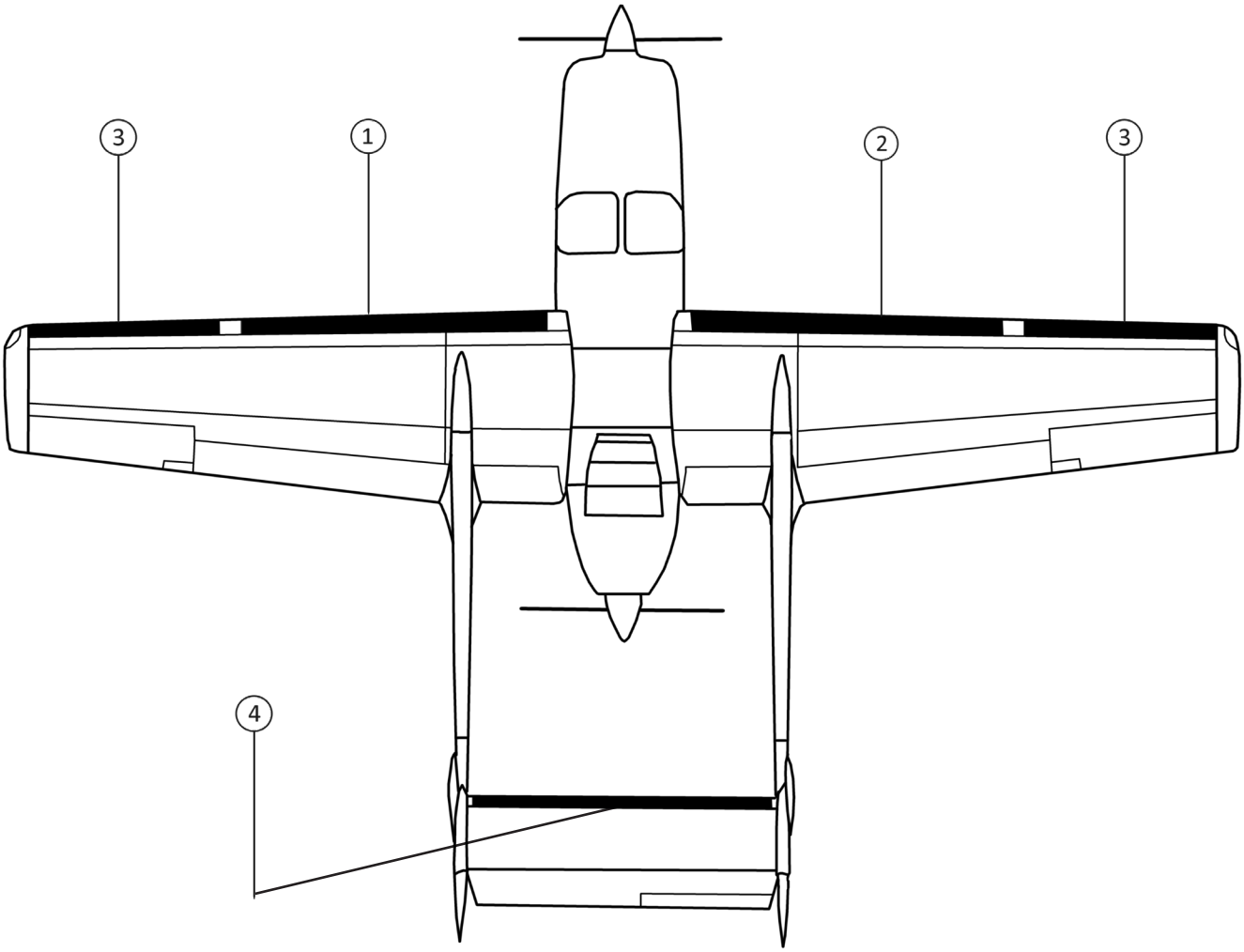

CESSNA 337F/G/H (SUPER SKYMASTER) S/N UP TO P33701763

CESSNA 337F/G/H (SUPER SKYMASTER) S/N UP TO P33701763

STANDARD DE-ICE BOOTS

POSITION ID	GOODRICH PART NUMBER	AIRCRAFT OEM P/N	DESCRIPTION	QTY PER AIRCRAFT	WT
1	25S-5D5053-01		FUSELAGE-TIP LH DE-ICE BOOT	1	7.1
2	25S-5D5053-02		FUSELAGE-TIP RH DE-ICE BOOT	1	7.1
3	25S-5D5053-03		HORIZONTAL STABILIZER DE-ICE BOOT	1	2.8

FASTboot® DE-ICE BOOTS

POSITION ID	GOODRICH PART NUMBER	AIRCRAFT OEM P/N	DESCRIPTION	QTY PER AIRCRAFT	WT
1	P25S-5D5053-01		FASTBOOT® FUSELAGE-TIP LH DE-ICE BOOT	1	7.1
2	P25S-5D5053-02		FASTBOOT® FUSELAGE-TIP RH DE-ICE BOOT	1	7.1
3	P25S-5D5053-03		FASTBOOT® HORIZONTAL STABILIZER DE-ICE BOOT	1	2.8

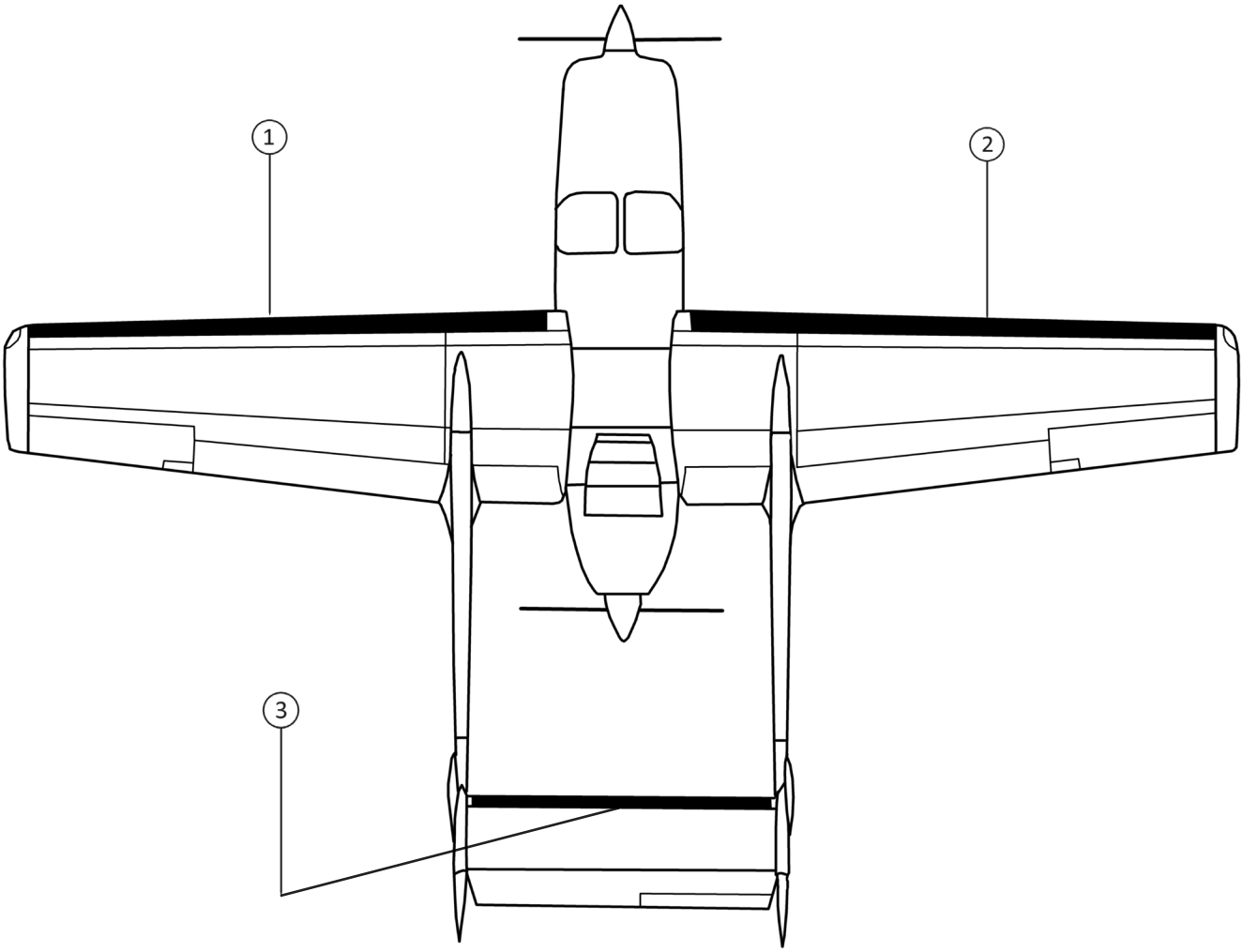

CESSNA 337F/G/H (SUPER SKYMASTER) S/N P33701764 UP

STANDARD DE-ICE BOOTS

POSITION ID	GOODRICH PART NUMBER	AIRCRAFT OEM P/N	DESCRIPTION	QTY PER AIRCRAFT	WT
1	25S-5D5053-05		FUSELAGE-TIP LH DE-ICE BOOT	1	7.1
2	25S-5D5053-02		FUSELAGE-TIP RH DE-ICE BOOT	1	7.1
3	25S-5D5053-03		HORIZONTAL STABILIZER DE-ICE BOOT	1	2.8

FASTboot® DE-ICE BOOTS

POSITION ID	GOODRICH PART NUMBER	AIRCRAFT OEM P/N	DESCRIPTION	QTY PER AIRCRAFT	WT
1	P25S-5D5053-05		FASTBOOT® FUSELAGE-TIP LH DE-ICE BOOT	1	7.1
2	P25S-5D5053-02		FASTBOOT® FUSELAGE-TIP RH DE-ICE BOOT	1	7.1
3	P25S-5D5053-03		FASTBOOT® HORIZONTAL STABILIZER DE-ICE BOOT	1	2.8

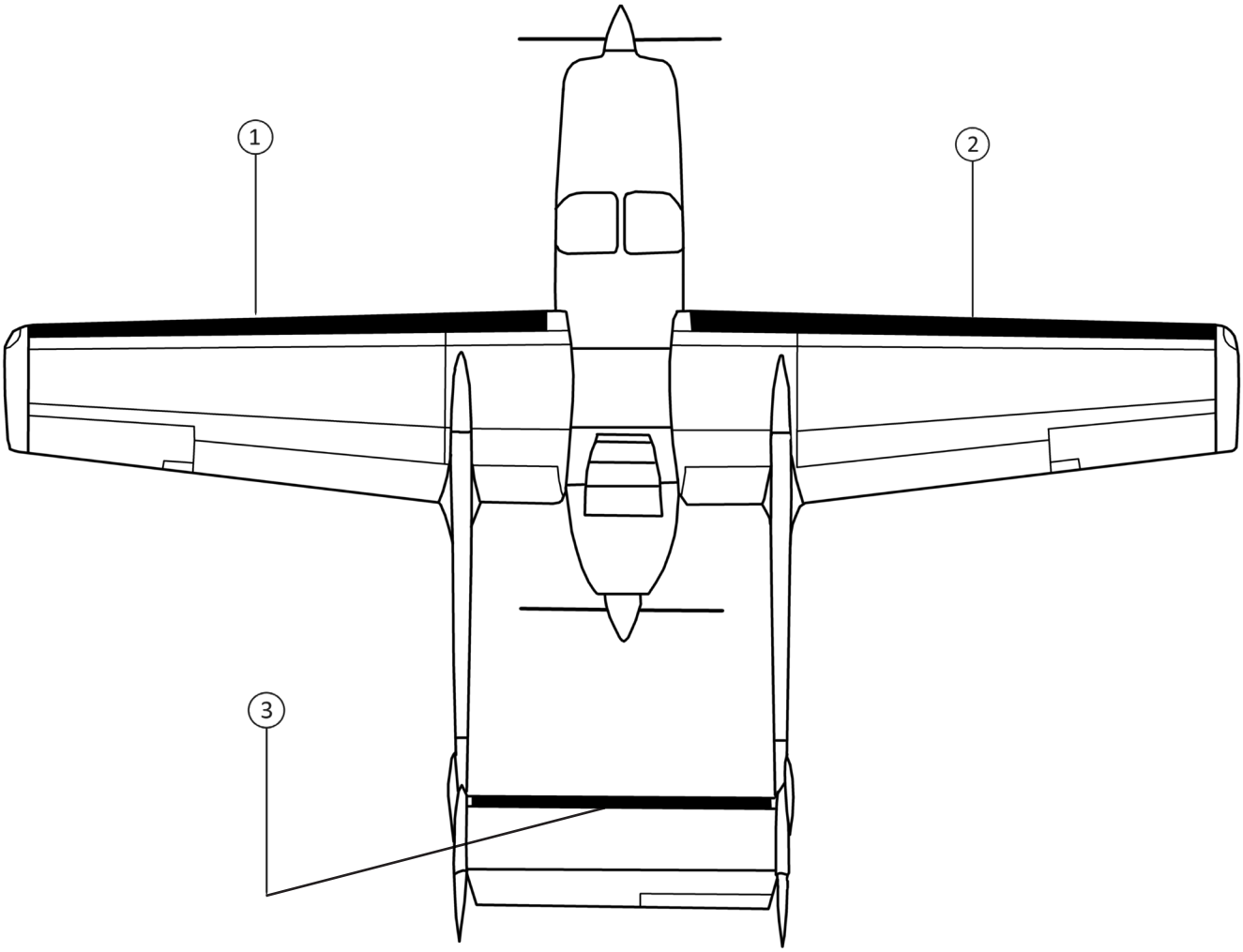

CESSNA T337F (TURBO SUPER SKYMASTER)

STANDARD DE-ICE BOOTS

POSITION ID	GOODRICH PART NUMBER	AIRCRAFT OEM P/N	DESCRIPTION	QTY PER AIRCRAFT	WT
1	25S-5D5053-01		FUSELAGE-TIP LH DE-ICE BOOT	1	7.1
2	25S-5D5053-02		FUSELAGE-TIP RH DE-ICE BOOT	1	7.1
3	25S-5D5053-03		HORIZONTAL STABILIZER DE-ICE BOOT	1	2.8

FASTboot® DE-ICE BOOTS

POSITION ID	GOODRICH PART NUMBER	AIRCRAFT OEM P/N	DESCRIPTION	QTY PER AIRCRAFT	WT
1	P25S-5D5053-01		FASTBOOT® FUSELAGE-TIP LH DE-ICE BOOT	1	7.1
2	P25S-5D5053-02		FASTBOOT® FUSELAGE-TIP RH DE-ICE BOOT	1	7.1
3	P25S-5D5053-03		FASTBOOT® HORIZONTAL STABILIZER DE-ICE BOOT	1	2.8

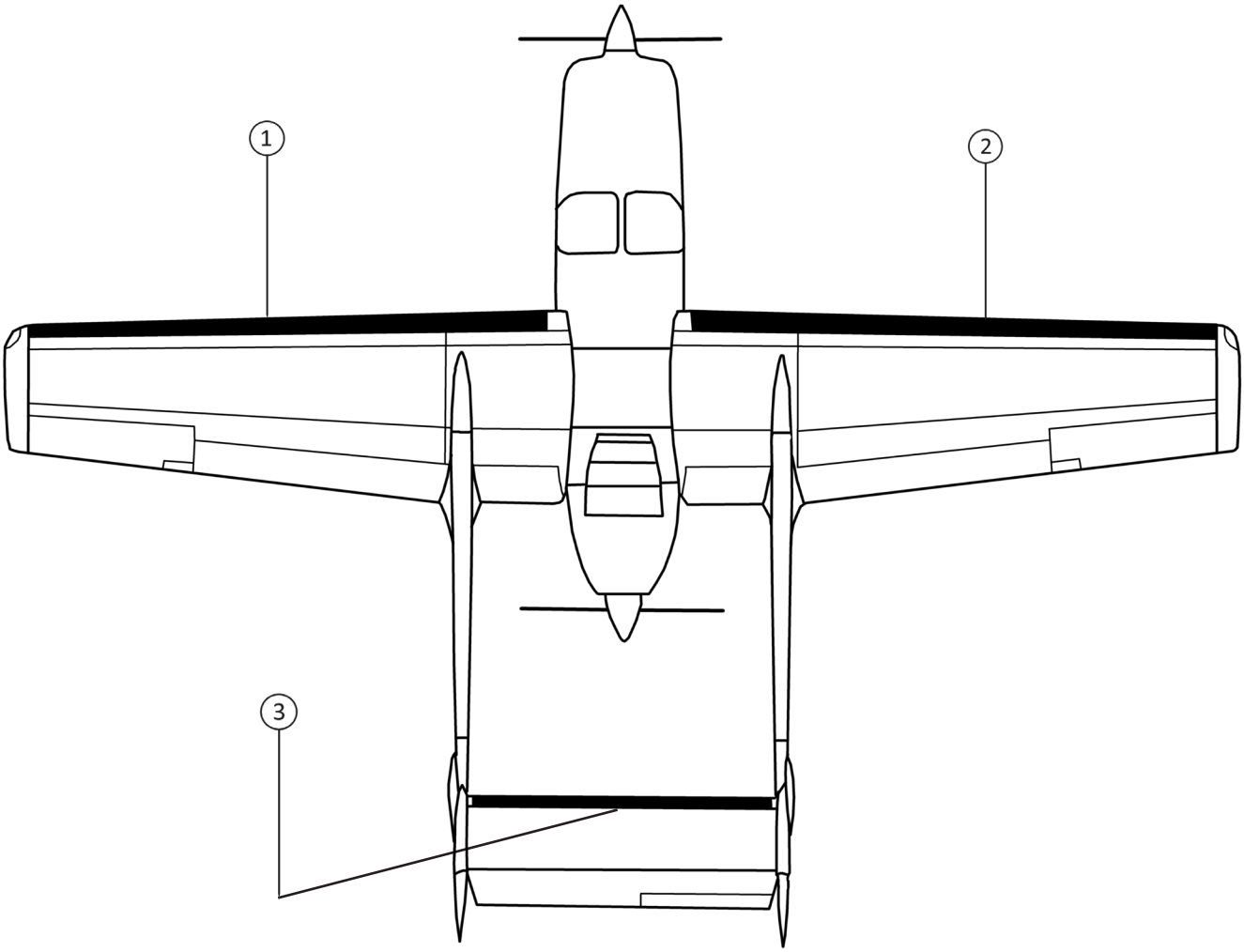

CESSNA T337G (SUPER SKYMASTER)

STANDARD DE-ICE BOOTS

POSITION ID	GOODRICH PART NUMBER	AIRCRAFT OEM P/N	DESCRIPTION	QTY PER AIRCRAFT	WT
1	25S-5D5053-01		FUSELAGE-TIP LH DE-ICE BOOT	1	7.1
2	25S-5D5053-02		FUSELAGE-TIP RH DE-ICE BOOT	1	7.1
3	25S-5D5053-03		HORIZONTAL STABILIZER DE-ICE BOOT	1	2.8

FASTboot® DE-ICE BOOTS

POSITION ID	GOODRICH PART NUMBER	AIRCRAFT OEM P/N	DESCRIPTION	QTY PER AIRCRAFT	WT
1	P25S-5D5053-01		FASTBOOT® FUSELAGE-TIP LH DE-ICE BOOT	1	7.1
2	P25S-5D5053-02		FASTBOOT® FUSELAGE-TIP RH DE-ICE BOOT	1	7.1
3	P25S-5D5053-03		FASTBOOT® HORIZONTAL STABILIZER DE-ICE BOOT	1	2.8

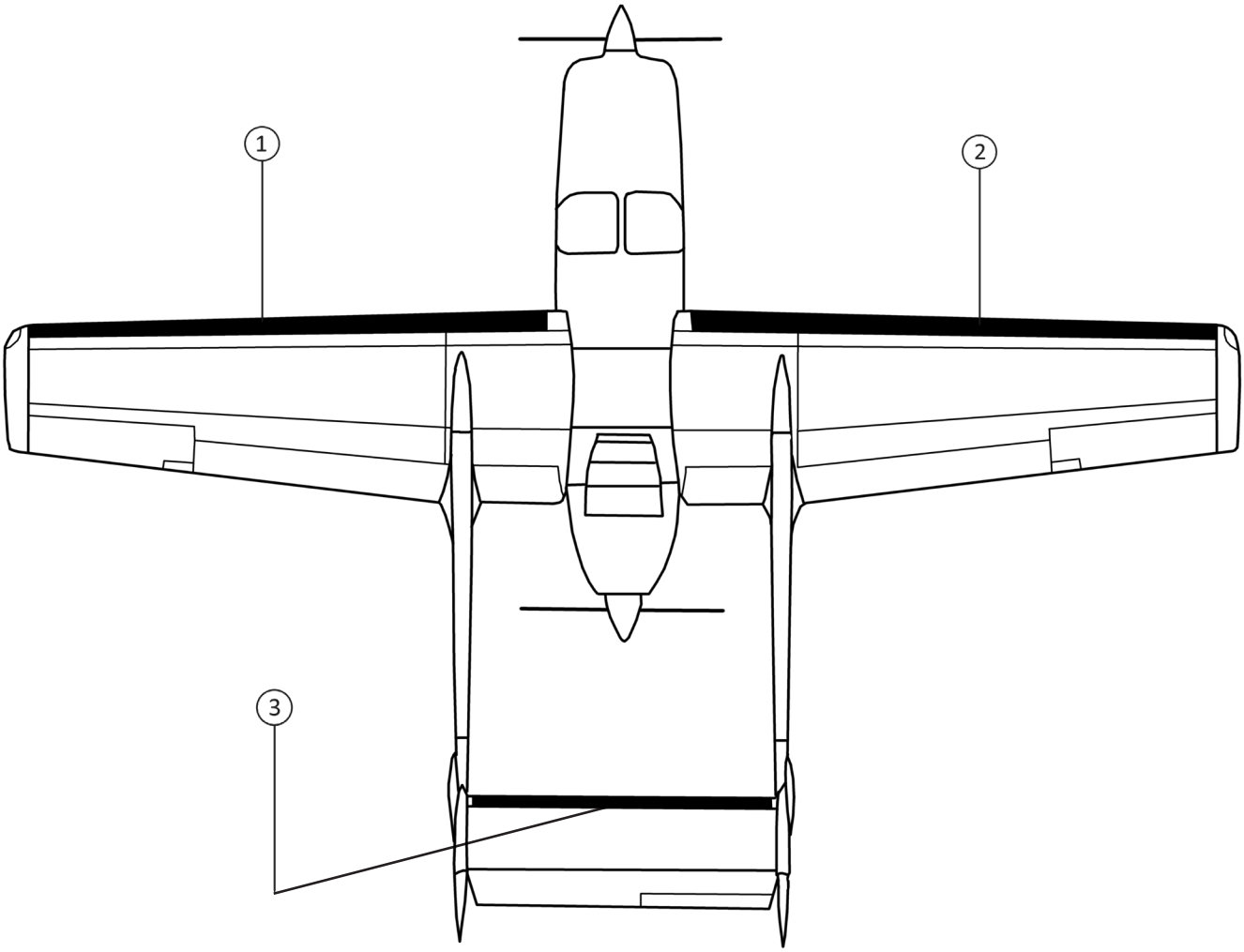

CESSNA T337H (TURBO SUPER SKYMASTER)

STANDARD DE-ICE BOOTS

POSITION ID	GOODRICH PART NUMBER	AIRCRAFT OEM P/N	DESCRIPTION	QTY PER AIRCRAFT	WT
1	25S-5D5053-01		FUSELAGE-TIP LH DE-ICE BOOT	1	7.1
2	25S-5D5053-02		FUSELAGE-TIP RH DE-ICE BOOT	1	7.1
3	25S-5D5053-03		HORIZONTAL STABILIZER DE-ICE BOOT	1	2.8

FASTboot® DE-ICE BOOTS

POSITION ID	GOODRICH PART NUMBER	AIRCRAFT OEM P/N	DESCRIPTION	QTY PER AIRCRAFT	WT
1	P25S-5D5053-01		FASTBOOT® FUSELAGE-TIP LH DE-ICE BOOT	1	7.1
2	P25S-5D5053-02		FASTBOOT® FUSELAGE-TIP RH DE-ICE BOOT	1	7.1
3	P25S-5D5053-03		FASTBOOT® HORIZONTAL STABILIZER DE-ICE BOOT	1	2.8

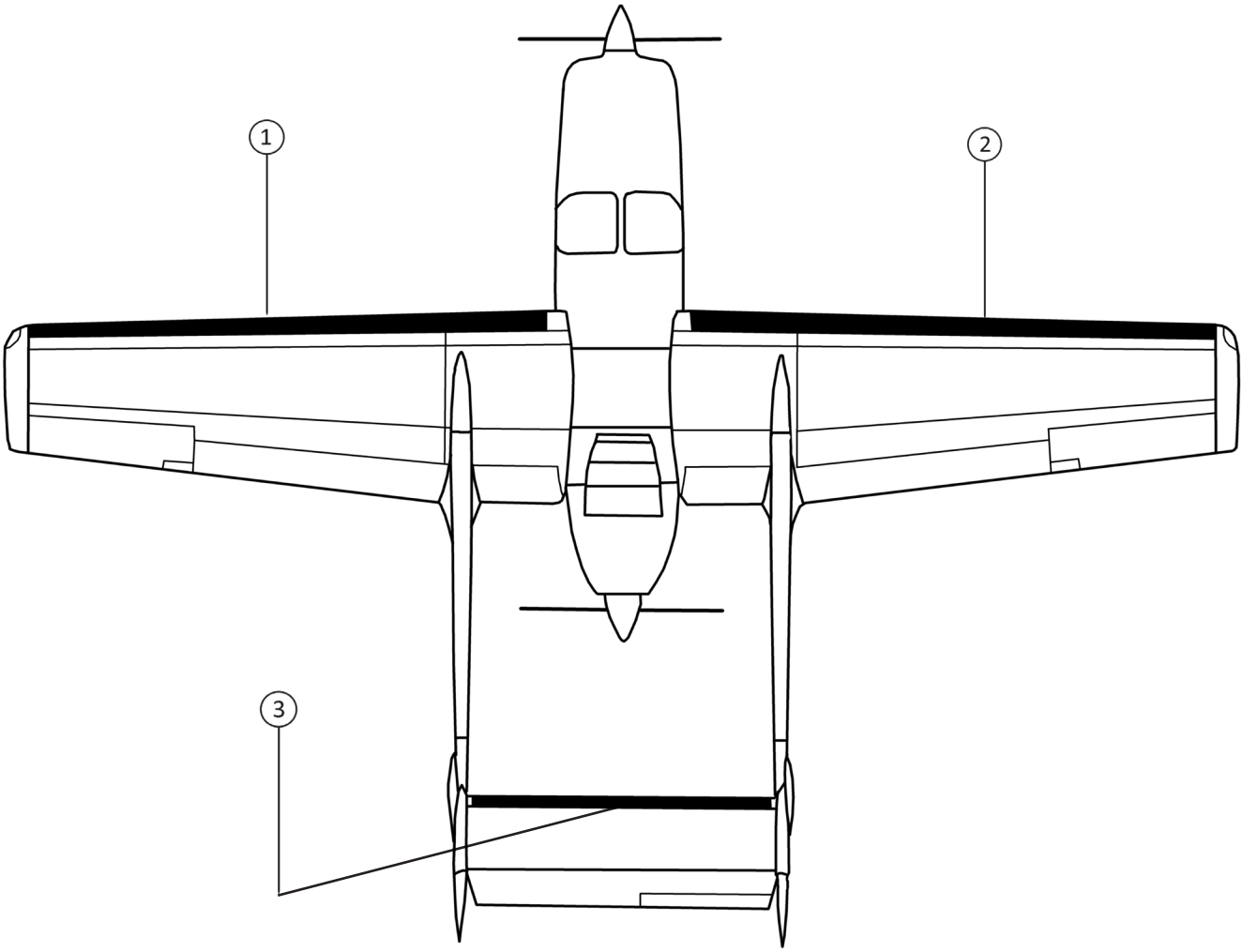

CESSNA T337H-SP (SUPER SKYMASTER)

STANDARD DE-ICE BOOTS

POSITION ID	GOODRICH PART NUMBER	AIRCRAFT OEM P/N	DESCRIPTION	QTY PER AIRCRAFT	WT
1	25S-5D5053-01		FUSELAGE-TIP LH DE-ICE BOOT	1	7.1
2	25S-5D5053-02		FUSELAGE-TIP RH DE-ICE BOOT	1	7.1
3	25S-5D5053-03		HORIZONTAL STABILIZER DE-ICE BOOT	1	2.8

FASTboot® DE-ICE BOOTS

POSITION ID	GOODRICH PART NUMBER	AIRCRAFT OEM P/N	DESCRIPTION	QTY PER AIRCRAFT	WT
1	P25S-5D5053-01		FASTBOOT® FUSELAGE-TIP LH DE-ICE BOOT	1	7.1
2	P25S-5D5053-02		FASTBOOT® FUSELAGE-TIP RH DE-ICE BOOT	1	7.1
3	P25S-5D5053-03		FASTBOOT® HORIZONTAL STABILIZER LH/RH DE-ICE BOOT	1	2.8

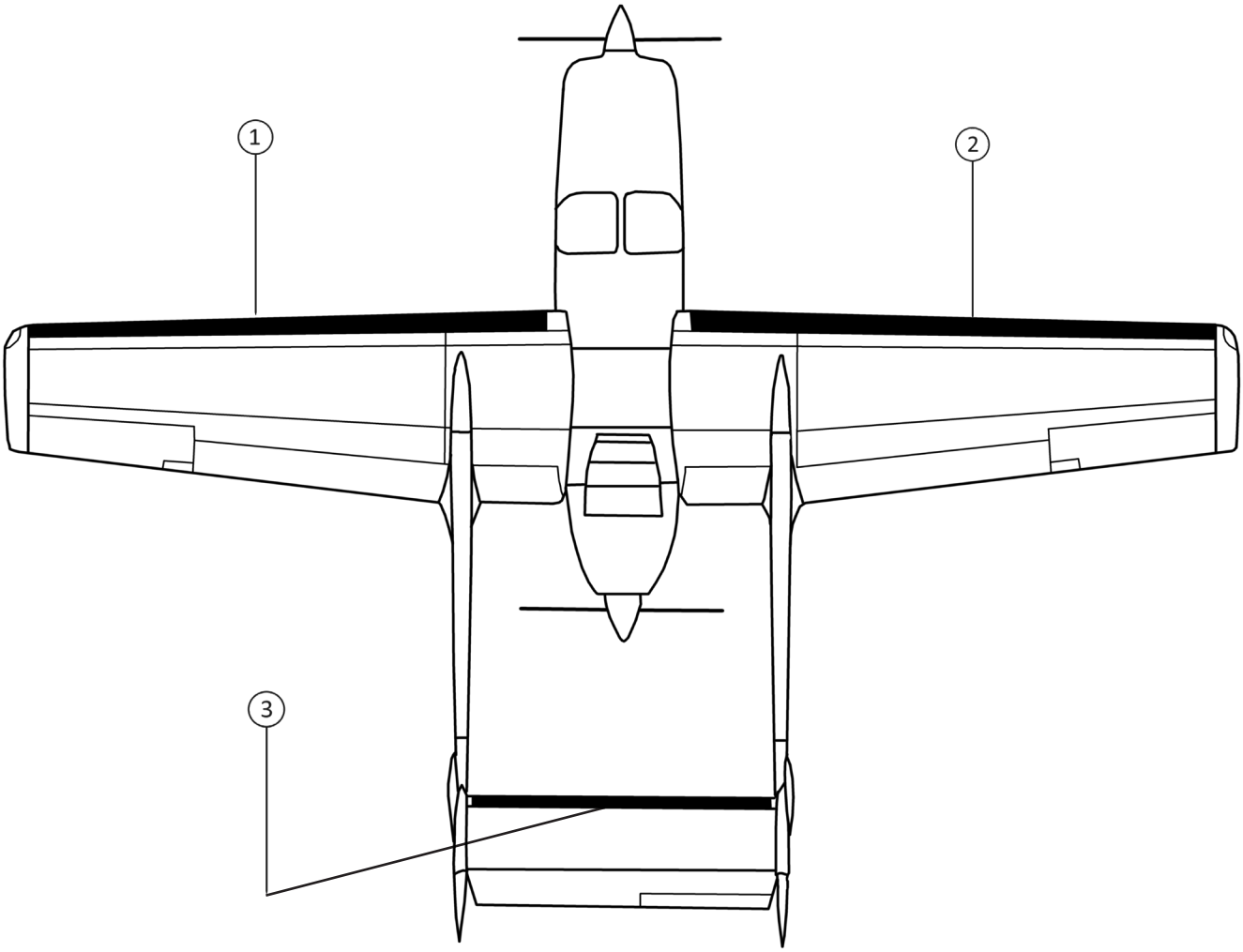

CESSNA 340

STANDARD DE-ICE BOOTS

POSITION ID	GOODRICH PART NUMBER	AIRCRAFT OEM P/N	DESCRIPTION	QTY PER AIRCRAFT	WT
1	29S5D2010-1-1		NACELLE-TIP LH TTS DE-ICE BOOT	1	4.3
1	29S5D2010-6-1*		NACELLE-TIP LH TTS DE-ICE BOOT	1	4.3
2	29S5D2010-1-2		NACELLE-TIP RH TTS DE-ICE BOOT	1	4.4
2	29S5D2010-6-2		NACELLE-TIP RH TTS DE-ICE BOOT	1	4.4
3	29S5D2010-2-1		HORIZONTAL STABILIZER LH/RH TTS DE-ICE BOOT	2	3.6
4	29S5D2010-5-1		VERTICAL STABILIZER TTS DE-ICE BOOT	1	1.6

TYPE 29 SEWN DE-ICER PROVIDES HIGHER DURABILITY THAN TYPE 23 TUBE TYPE DESIGN

*29S5D2010-6-1 HAS THIN WEB AREA FOR TURBOCHARGER AIR INTAKE

OPTIONAL STANDARD DE-ICE BOOTS

POSITION ID	GOODRICH PART NUMBER	AIRCRAFT OEM P/N	DESCRIPTION	QTY PER AIRCRAFT	WT
1	23S-2010-1-1	0820517-9	NACELLE-TIP LH DE-ICE BOOT (SUPERSEDED BY P/N 29S5D2010-1-1)	1	4.6
2	23S-2010-1-2	0820517-10	NACELLE-TIP RH DE-ICE BOOT (SUPERSEDED BY P/N 29S5D2010-1-2)	1	4.7
3	23S-2010-2-1*	0820517-11	HORIZONTAL STABILIZER LH/RH DE-ICE BOOT (SUPERSEDED BY P/N 29S5D2010-2-1)	2	3.7
3	25S-4D5147-03		(ALTERNATE P/N) HORIZONTAL STABILIZER LH/RH DE-ICE BOOT	2	2.6
4	23S-2010-5-1		VERTICAL STABILIZER DE-ICE BOOT (SUPERSEDED BY P/N 29S5D2010-5-1)	1	1.6

*PART NUMBERS 23S-2010-2-1 AND 25S-4D5147-03 ARE INTERCHANGABLE

23S-2010-2-1 HAS AN EXTRA 1/8 IN. OF MATERIAL AT THE ENDS AND AN EXTRA 1 3/8 IN. OF MATERIAL AT THE EDGES

FASTboot® DE-ICE BOOTS

POSITION ID	GOODRICH PART NUMBER	AIRCRAFT OEM P/N	DESCRIPTION	QTY PER AIRCRAFT	WT
1	P29S5D2010-1-1		FASTBOOT® NACELLE-TIP LH TTS DE-ICE BOOT	1	4.3
1	P29S5D2010-6-1*		FASTBOOT® NACELLE-TIP LH TTS DE-ICE BOOT	1	4.3
2	P29S5D2010-1-2		FASTBOOT® NACELLE-TIP RH TTS DE-ICE BOOT	1	4.4
2	P29S5D2010-6-2		FASTBOOT® NACELLE-TIP RH TTS DE-ICE BOOT	1	4.4
3	P29S5D2010-2-1		FASTBOOT® HORIZONTAL STABILIZER LH/RH TTS DE-ICE BOOT	2	3.6
4	P29S5D2010-5-1		FASTBOOT® VERTICAL STABILIZER TTS DE-ICE BOOT	1	1.6

*P29S5D2010-6-1 HAS THIN WEB AREA FOR TURBOCHARGER AIR INTAKE

CESSNA 340

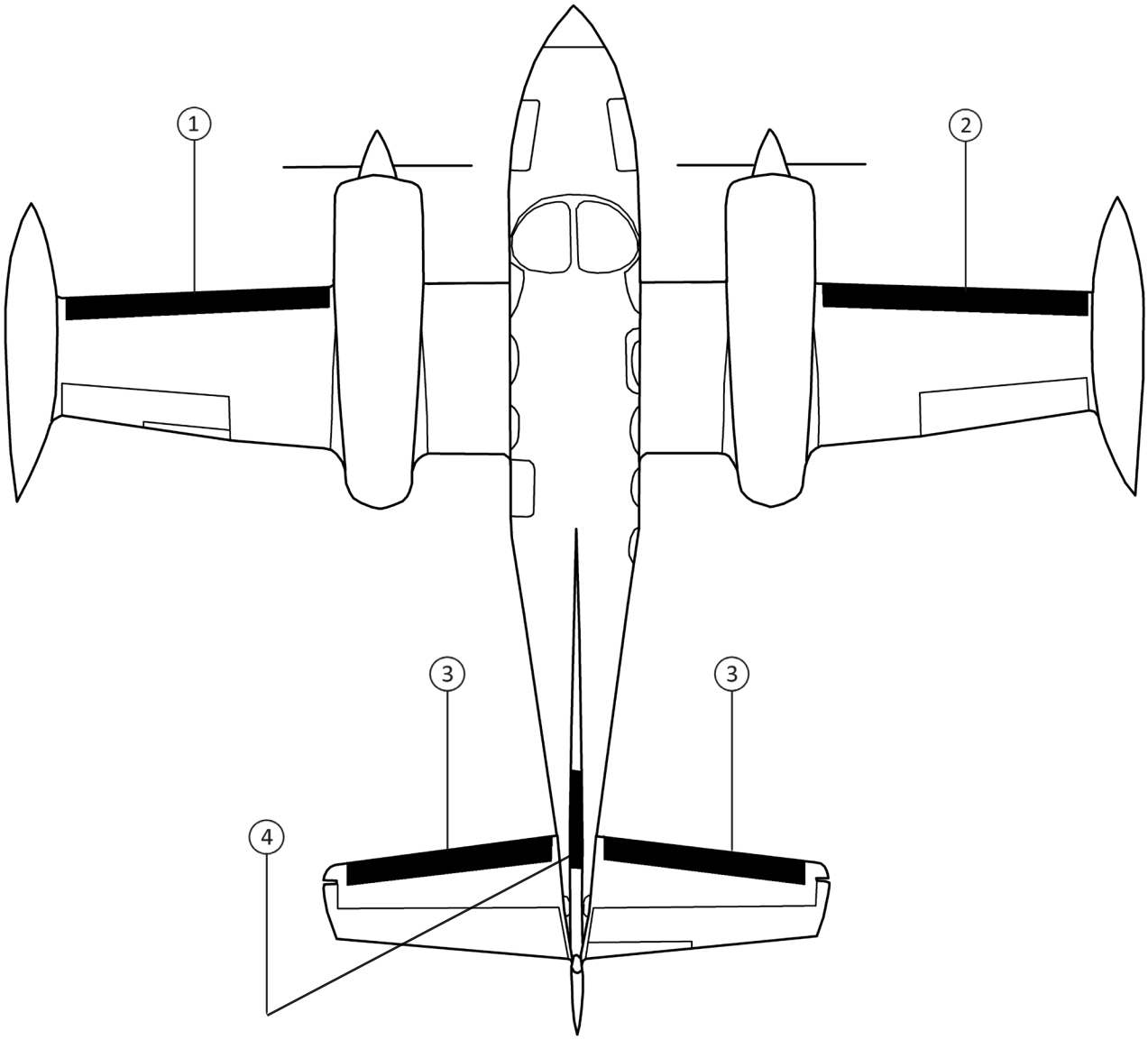

CESSNA 340A S/N 340A0001 THRU 340A0125

STANDARD DE-ICE BOOTS

POSITION ID	GOODRICH PART NUMBER	AIRCRAFT OEM P/N	DESCRIPTION	QTY PER AIRCRAFT	WT
1	29S5D2010-1-1		NACELLE-TIP LH TTS DE-ICE BOOT	1	4.3
1	29S5D2010-6-1*		NACELLE-TIP LH TTS DE-ICE BOOT	1	4.3
2	29S5D2010-1-2		NACELLE-TIP RH TTS DE-ICE BOOT	1	4.4
2	29S5D2010-6-2		NACELLE-TIP RH TTS DE-ICE BOOT	1	4.4
3	29S5D2010-2-1		HORIZONTAL STABILIZER LH/RH TTS DE-ICE BOOT	2	3.6
4	29S5D2010-5-1		VERTICAL STABILIZER TTS DE-ICE BOOT	1	1.6

TYPE 29 SEWN DE-ICER PROVIDES HIGHER DURABILITY THAN TYPE 23 TUBE TYPE DESIGN

*29S5D2010-6-1 HAS THIN WEB AREA FOR TURBOCHARGER AIR INTAKE

OPTIONAL STANDARD DE-ICE BOOTS

POSITION ID	GOODRICH PART NUMBER	AIRCRAFT OEM P/N	DESCRIPTION	QTY PER AIRCRAFT	WT
1	23S-2010-1-1	0820517-9	NACELLE-TIP LH DE-ICE BOOT (SUPERSEDED BY P/N 29S5D2010-1-1)	1	4.6
2	23S-2010-1-2	0820517-10	NACELLE-TIP RH DE-ICE BOOT (SUPERSEDED BY P/N 29S5D2010-1-2)	1	4.7
3	23S-2010-2-1*	0820517-11	HORIZONTAL STABILIZER LH/RH DE-ICE BOOT (SUPERSEDED BY P/N 29S5D2010-2-1)	2	3.7
3	25S-4D5147-03		(ALTERNATE P/N) HORIZONTAL STABILIZER LH/RH DE-ICE BOOT	2	2.6
4	23S-2010-5-1		VERTICAL STABILIZER DE-ICE BOOT (SUPERSEDED BY P/N 29S5D2010-5-1)	1	1.6

*PART NUMBERS 23S-2010-2-1 AND 25S-4D5147-03 ARE INTERCHANGABLE

23S-2010-2-1 HAS AN EXTRA 1/8 IN. OF MATERIAL AT THE ENDS AND AN EXTRA 1 3/8 IN. OF MATERIAL AT THE EDGES

FASTboot® DE-ICE BOOTS

POSITION ID	GOODRICH PART NUMBER	AIRCRAFT OEM P/N	DESCRIPTION	QTY PER AIRCRAFT	WT
1	P29S5D2010-1-1		FASTBOOT® NACELLE-TIP LH TTS DE-ICE BOOT	1	4.3
1	P29S5D2010-6-1*		FASTBOOT® NACELLE-TIP LH TTS DE-ICE BOOT	1	4.3
2	P29S5D2010-1-2		FASTBOOT® NACELLE-TIP RH TTS DE-ICE BOOT	1	4.4
2	P29S5D2010-6-2		FASTBOOT® NACELLE-TIP RH TTS DE-ICE BOOT	1	4.4
3	P29S5D2010-2-1		FASTBOOT® HORIZONTAL STABILIZER LH/RH TTS DE-ICE BOOT	2	3.6
4	P29S5D2010-5-1		FASTBOOT® VERTICAL STABILIZER TTS DE-ICE BOOT	1	1.6

*P29S5D2010-6-1 HAS THIN WEB AREA FOR TURBOCHARGER AIR INTAKE

CESSNA 340A S/N 340A0001 THRU 340A0125

CESSNA 340A S/N 340A0001 THRU 340A0125

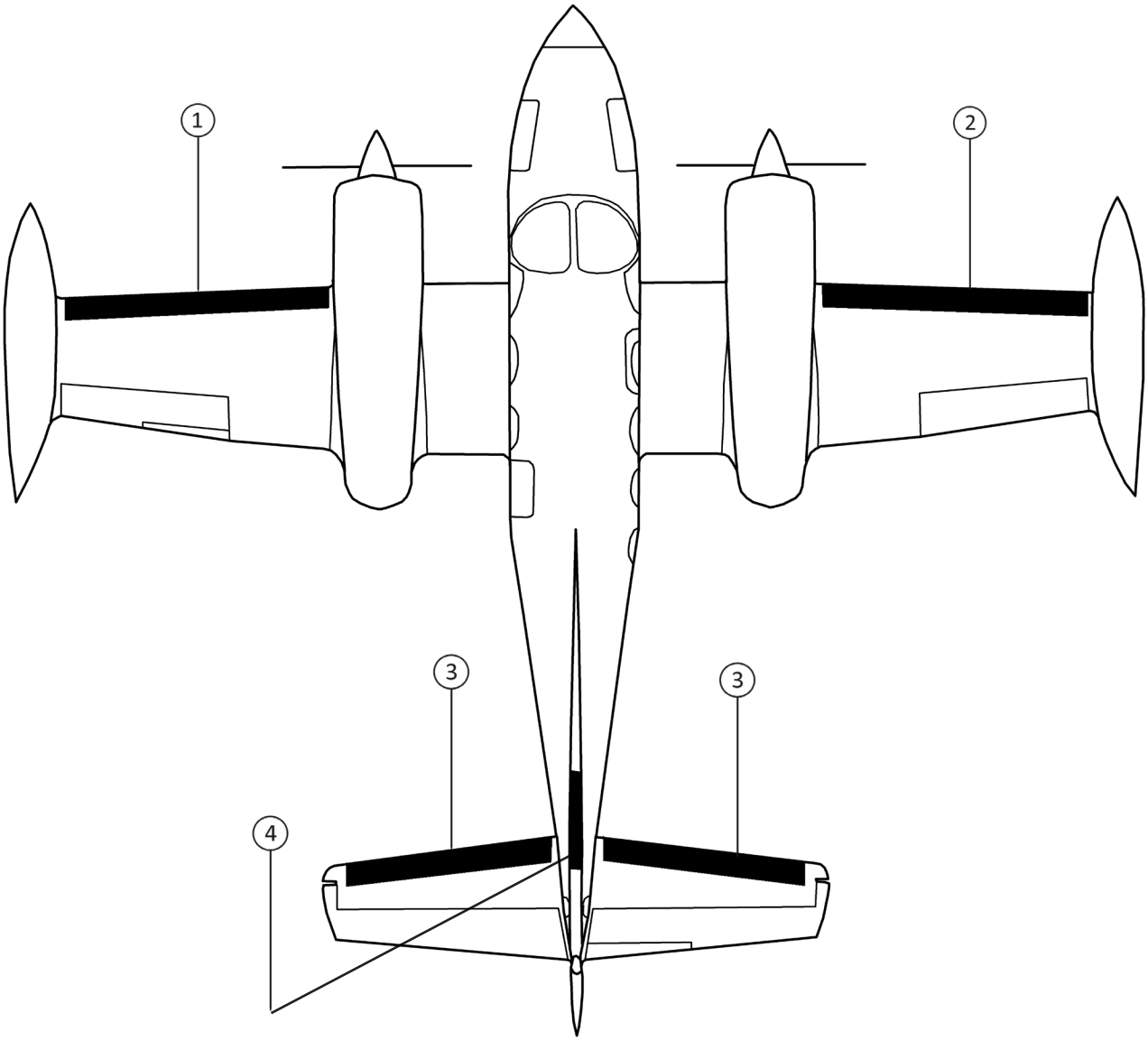

CESSNA 340A S/N 340A0201 UP

STANDARD DE-ICE BOOTS

POSITION ID	GOODRICH PART NUMBER	AIRCRAFT OEM P/N	DESCRIPTION	QTY PER AIRCRAFT	WT
1	27S-7D5070-31		FUSELAGE-NACELLE LH DE-ICE BOOT	1	0.9
2	27S-7D5070-32		FUSELAGE-NACELLE RH DE-ICE BOOT	1	0.9
3	27S-7D5070-03		NACELLE-TIP LH DE-ICE BOOT	1	3.3
4	27S-7D5070-04		NACELLE-TIP RH DE-ICE BOOT	1	3.3
5	27S-7D5070-11		HORIZONTAL STABILIZER LH/RH DE-ICE BOOT	2	2.2
6	27S-7D5070-13		VERTICAL STABILIZER DE-ICE BOOT	1	1.2

FASTboot® DE-ICE BOOTS

POSITION ID	GOODRICH PART NUMBER	AIRCRAFT OEM P/N	DESCRIPTION	QTY PER AIRCRAFT	WT
1	P27S-7D5070-31		FASTBOOT® FUSELAGE-NACELLE LH DE-ICE BOOT	1	0.9
2	P27S-7D5070-32		FASTBOOT® FUSELAGE-NACELLE RH DE-ICE BOOT	1	0.9
3	P27S-7D5070-03		FASTBOOT® NACELLE-TIP LH DE-ICE BOOT	1	3.3
4	P27S-7D5070-04		FASTBOOT® NACELLE-TIP RH DE-ICE BOOT	1	3.3
5	P27S-7D5070-11		FASTBOOT® HORIZONTAL STABILIZER LH/RH DE-ICE BOOT	2	2.2
6	P27S-7D5070-13		FASTBOOT® VERTICAL STABILIZER DE-ICE BOOT	1	1.2

CESSNA 340A S/N 340A0201 UP

CESSNA 340A S/N 340A0201 UP

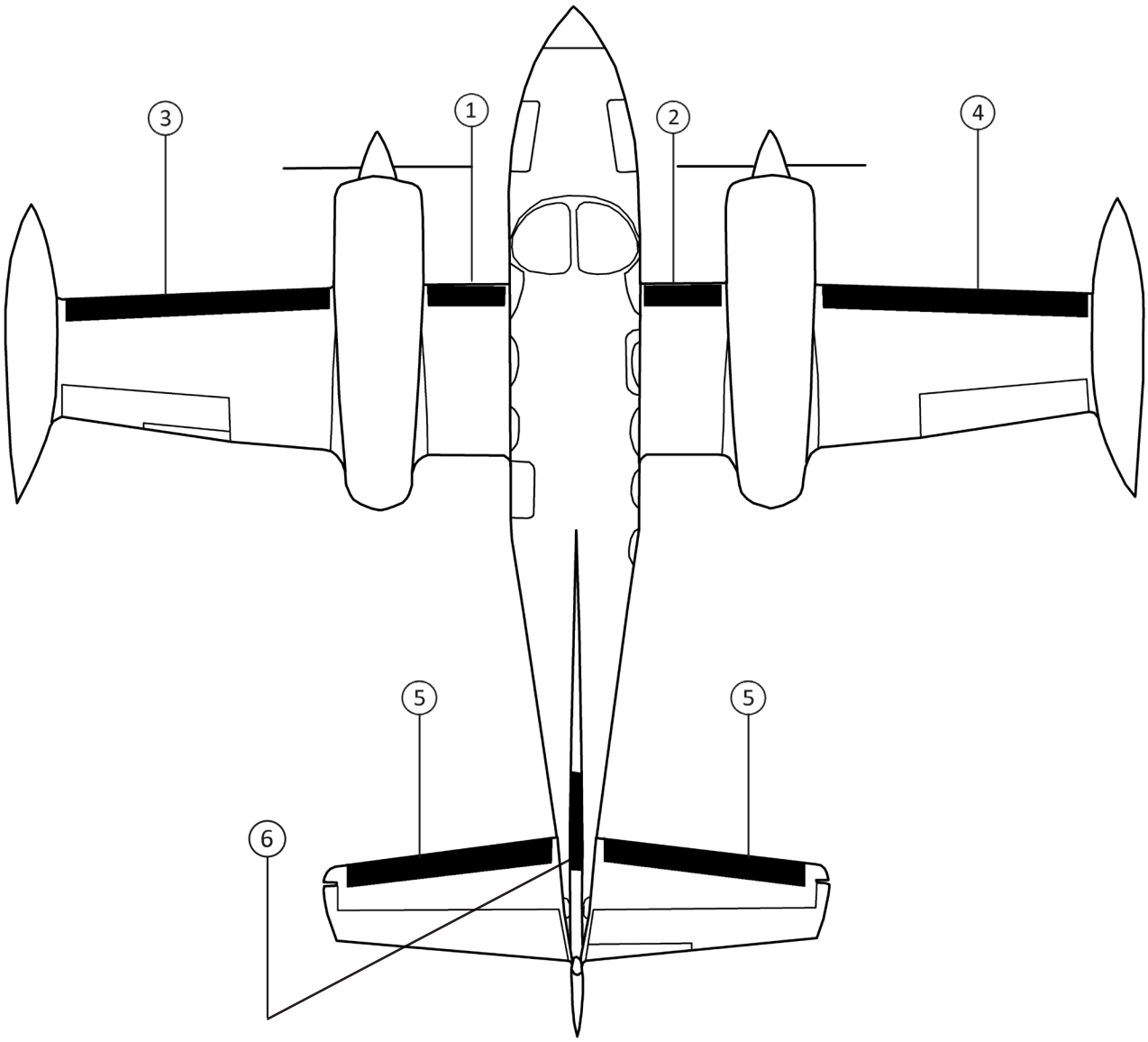

CESSNA 401 S/N TO 401-0144 (UTILINER/BUSINESSLINER)

STANDARD DE-ICE BOOTS

POSITION ID	GOODRICH PART NUMBER	AIRCRAFT OEM P/N	DESCRIPTION	QTY PER AIRCRAFT	WT
1	23S-2010-6-1	0820517-27	NACELLE-TIP LH DE-ICE BOOT	1	4.6
2	23S-2010-6-2	0820517-26	NACELLE-TIP RH DE-ICE BOOT	1	4.7
3	29S5D2074-2-1		HORIZONTAL STABILIZER LH/RH TTS DE-ICE BOOT	2	3.7
4	29S5D2074-3-1		VERTICAL STABILIZER TTS DE-ICE BOOT	1	1.5

TYPE 29 SEWN DE-ICER PROVIDES HIGHER DURABILITY THAN TYPE 23 TUBE TYPE DESIGN

SUPERSEDED STANDARD DE-ICE BOOTS

POSITION ID	GOODRICH PART NUMBER	AIRCRAFT OEM P/N	DESCRIPTION	QTY PER AIRCRAFT	WT
3	23S-2074-2-1		HORIZONTAL STABILIZER LH/RH DE-ICE BOOT (SUPERSEDED BY P/N 29S5D2074-2-1)	2	3.7
4	23S-2074-3-1		VERTICAL STABILIZER DE-ICE BOOT (SUPERSEDED BY P/N 29S5D2074-3-1)	1	1.5

FASTboot® DE-ICE BOOTS

POSITION ID	GOODRICH PART NUMBER	AIRCRAFT OEM P/N	DESCRIPTION	QTY PER AIRCRAFT	WT
3	P29S5D2074-2-1		FASTBOOT® HORIZONTAL STABILIZER LH/RH TTS DE-ICE BOOT	2	3.7
4	P29S5D2074-3-1		FASTBOOT® VERTICAL STABILIZER TTS DE-ICE BOOT	1	1.5

CESSNA 401 S/N TO 401-0144 (UTILINER/BUSINESSLINER)

CESSNA 401 S/N TO 401-0144 (UTILINER/BUSINESSLINER)

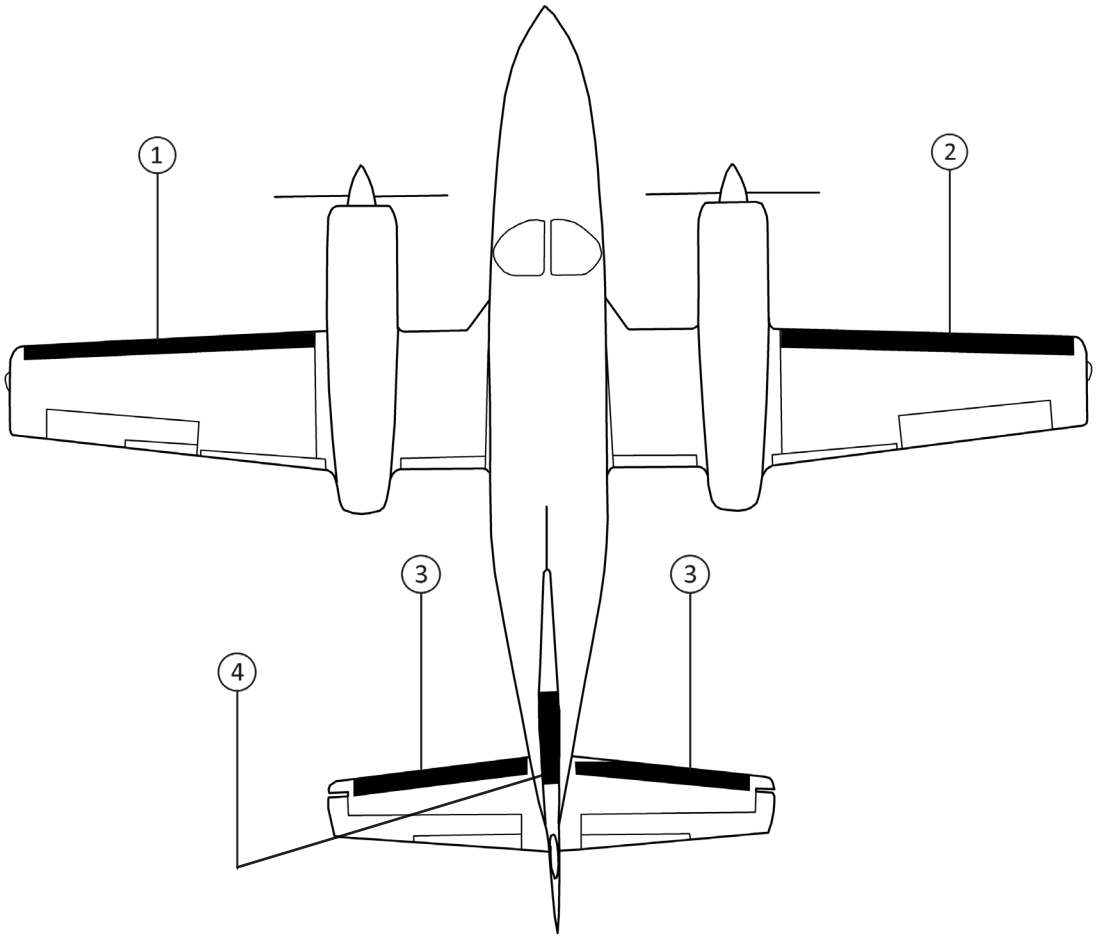

CESSNA 401 S/N 401-0145 UP (UTILINER/BUSINESSLINER)

STANDARD DE-ICE BOOTS

POSITION ID	GOODRICH PART NUMBER	AIRCRAFT OEM P/N	DESCRIPTION	QTY PER AIRCRAFT	WT
1	29S5D2010-1-1		NACELLE-TIP LH TTS DE-ICE BOOT	1	4.3
2	29S5D2010-1-2		NACELLE-TIP RH TTS DE-ICE BOOT	1	4.4
3	29S5D2074-2-1		HORIZONTAL STABILIZER LH/RH TTS DE-ICE BOOT	2	3.7
4	29S5D2074-3-1		VERTICAL STABILIZER TTS DE-ICE BOOT	1	1.5

TYPE 29 SEWN DE-ICER PROVIDES HIGHER DURABILITY THAN TYPE 23 TUBE TYPE DESIGN

SUPERSEDED STANDARD DE-ICE BOOTS

POSITION ID	GOODRICH PART NUMBER	AIRCRAFT OEM P/N	DESCRIPTION	QTY PER AIRCRAFT	WT
1	23S-2010-1-1	0820517-9	NACELLE-TIP LH DE-ICE BOOT (SUPERSEDED BY P/N 29S5D2010-1-1)	1	4.6
2	23S-2010-1-2	0820517-10	NACELLE-TIP RH DE-ICE BOOT (SUPERSEDED BY P/N 29S5D2010-1-2)	1	4.7
3	23S-2074-2-1		HORIZONTAL STABILIZER LH/RH DE-ICE BOOT (SUPERSEDED BY P/N 29S5D2074-2-1)	2	3.7
4	23S-2074-3-1		VERTICAL STABILIZER DE-ICE BOOT (SUPERSEDED BY P/N 29S5D2074-3-1)	1	1.5

FASTboot® DE-ICE BOOTS

POSITION ID	GOODRICH PART NUMBER	AIRCRAFT OEM P/N	DESCRIPTION	QTY PER AIRCRAFT	WT
1	P29S5D2010-1-1		FASTBOOT® NACELLE-TIP LH TTS DE-ICE BOOT	1	4.3
2	P29S5D2010-1-2		FASTBOOT® NACELLE-TIP RH TTS DE-ICE BOOT	1	4.4
3	P29S5D2074-2-1		FASTBOOT® HORIZONTAL STABILIZER LH/RH TTS DE-ICE BOOT	2	3.7
4	P29S5D2074-3-1		FASTBOOT® VERTICAL STABILIZER TTS DE-ICE BOOT	1	1.5

CESSNA 401 S/N 401-0145 UP (UTILINER/BUSINESSLINER)

CESSNA 401 S/N 401-0145 UP (UTILINER/BUSINESSLINER)

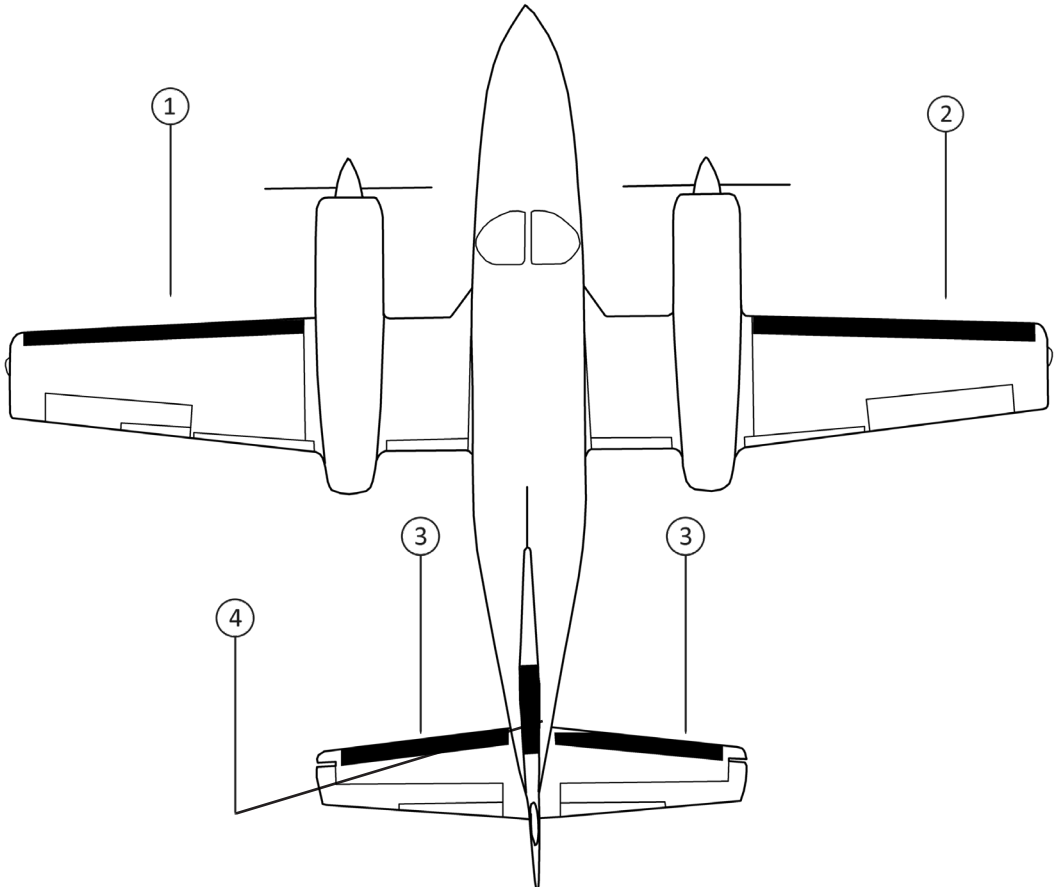

CESSNA 401A (UTILINER/BUSINESSLINER)

STANDARD DE-ICE BOOTS

POSITION ID	GOODRICH PART NUMBER	AIRCRAFT OEM P/N	DESCRIPTION	QTY PER AIRCRAFT	WT
1	29S5D2010-1-1		NACELLE-TIP LH TTS DE-ICE BOOT	1	4.3
2	29S5D2010-1-2		NACELLE-TIP RH TTS DE-ICE BOOT	1	4.4
3	29S5D2074-2-1		HORIZONTAL STABILIZER LH/RH TTS DE-ICE BOOT	2	3.7
4	29S5D2074-3-1		VERTICAL STABILIZER TTS DE-ICE BOOT	1	1.5

TYPE 29 SEWN DE-ICER PROVIDES HIGHER DURABILITY THAN TYPE 23 TUBE TYPE DESIGN

SUPERSEDED STANDARD DE-ICE BOOTS

POSITION ID	GOODRICH PART NUMBER	AIRCRAFT OEM P/N	DESCRIPTION	QTY PER AIRCRAFT	WT
1	23S-2010-1-1	0820517-9	NACELLE-TIP LH DE-ICE BOOT (SUPERSEDED BY P/N 29S5D2010-1-1)	1	4.6
2	23S-2010-1-2	0820517-10	NACELLE-TIP RH DE-ICE BOOT (SUPERSEDED BY P/N 29S5D2010-1-2)	1	4.7
3	23S-2074-2-1		HORIZONTAL STABILIZER LH/RH DE-ICE BOOT (SUPERSEDED BY P/N 29S5D2074-2-1)	2	3.7
4	23S-2074-3-1		VERTICAL STABILIZER DE-ICE BOOT (SUPERSEDED BY P/N 29S5D2074-3-1)	1	1.5

FASTboot® DE-ICE BOOTS

POSITION ID	GOODRICH PART NUMBER	AIRCRAFT OEM P/N	DESCRIPTION	QTY PER AIRCRAFT	WT
1	P29S5D2010-1-1		FASTBOOT® NACELLE-TIP LH TTS DE-ICE BOOT	1	4.3
2	P29S5D2010-1-2		FASTBOOT® NACELLE-TIP RH TTS DE-ICE BOOT	1	4.4
3	P29S5D2074-2-1		FASTBOOT® HORIZONTAL STABILIZER LH/RH TTS DE-ICE BOOT	2	3.7
4	P29S5D2074-3-1		FASTBOOT® VERTICAL STABILIZER TTS DE-ICE BOOT	1	1.5

CESSNA 401A (UTILINER/BUSINESSLINER)

CESSNA 401A (UTILINER/BUSINESSLINER)

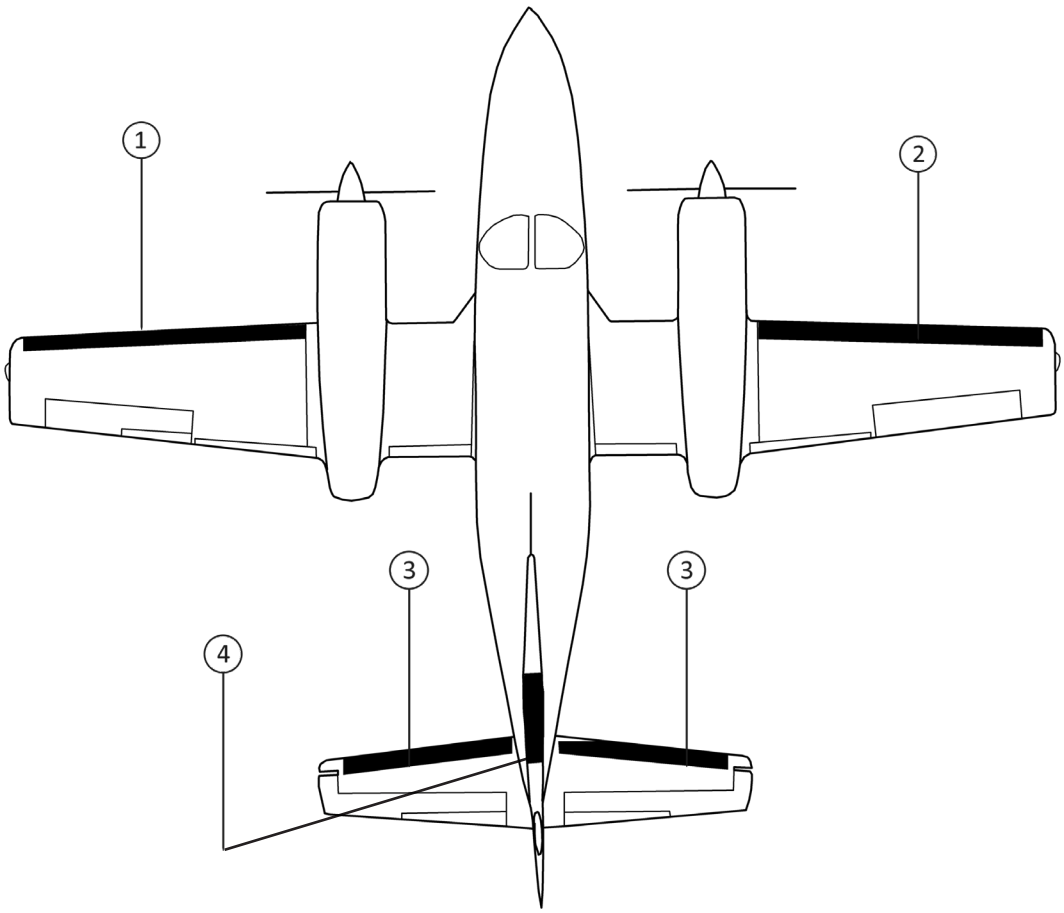

CESSNA 401B (UTILINER/BUSINESSLINER SERIES)

STANDARD DE-ICE BOOTS

POSITION ID	GOODRICH PART NUMBER	AIRCRAFT OEM P/N	DESCRIPTION	QTY PER AIRCRAFT	WT
1	23S-2010-1-1	0820517-9	NACELLE-TIP LH DE-ICE BOOT	1	4.6
2	23S-2010-1-2	0820517-10	NACELLE-TIP RH DE-ICE BOOT	1	4.7
3	29S5D2074-2-1		HORIZONTAL STABILIZER LH/RH TTS DE-ICE BOOT	2	3.7
4	29S5D2074-3-1		VERTICAL STABILIZER TTS DE-ICE BOOT	1	1.5

TYPE 29 SEWN DE-ICER PROVIDES HIGHER DURABILITY THAN TYPE 23 TUBE TYPE DESIGN

SUPERSEDED STANDARD DE-ICE BOOTS

POSITION ID	GOODRICH PART NUMBER	AIRCRAFT OEM P/N	DESCRIPTION	QTY PER AIRCRAFT	WT
3	23S-2074-2-1		HORIZONTAL STABILIZER LH/RH TTS DE-ICE BOOT (SUPERSEDED BY P/N 29S5D2074-2-1)	2	3.7
4	23S-2074-3-1		VERTICAL STABILIZER TTS DE-ICE BOOT (SUPERSEDED BY P/N 29S5D2074-3-1)	1	1.5

FASTboot® DE-ICE BOOTS

POSITION ID	GOODRICH PART NUMBER	AIRCRAFT OEM P/N	DESCRIPTION	QTY PER AIRCRAFT	WT
3	P29S5D2074-2-1		FASTBOOT® HORIZONTAL STABILIZER LH/RH TTS DE-ICE BOOT	2	3.7
4	P29S5D2074-3-1		FASTBOOT® VERTICAL STABILIZER TTS DE-ICE BOOT	1	1.5

CESSNA 401B (UTILINER/BUSINESSLINER SERIES)

CESSNA 401B (UTILINER/BUSINESSLINER SERIES)

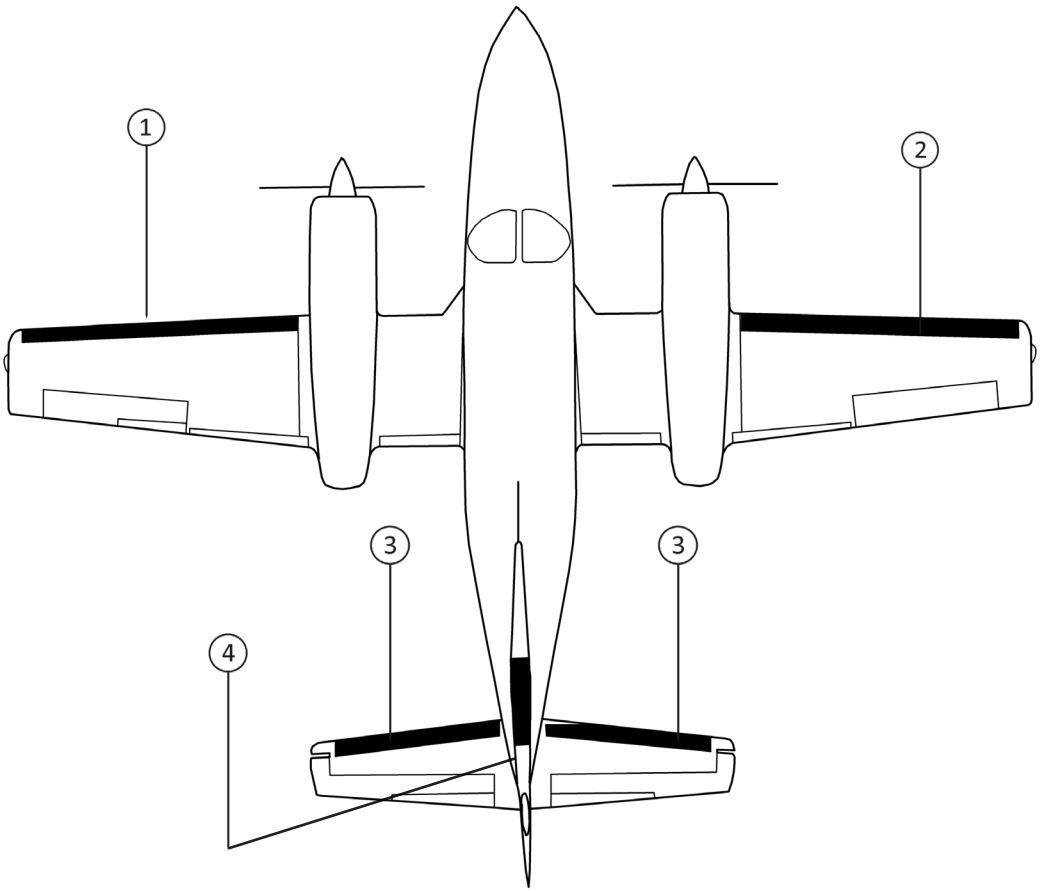

CESSNA 402 (UTILINER/BUSINESSLINER) S/N TO 402-0144

STANDARD DE-ICE BOOTS

POSITION ID	GOODRICH PART NUMBER	AIRCRAFT OEM P/N	DESCRIPTION	QTY PER AIRCRAFT	WT
1	23S-2010-6-1	0820517-27	NACELLE-TIP LH DE-ICE BOOT	1	4.6
2	23S-2010-6-2	0820517-26	NACELLE-TIP RH DE-ICE BOOT	1	4.7
3	29S5D2074-2-1		HORIZONTAL STABILIZER LH/RH TTS DE-ICE BOOT	2	3.7
4	29S5D2074-3-1		VERTICAL STABILIZER TTS DE-ICE BOOT	1	1.5

TYPE 29 SEWN DE-ICER PROVIDES HIGHER DURABILITY THAN TYPE 23 TUBE TYPE DESIGN

SUPERSEDED STANDARD DE-ICE BOOTS

POSITION ID	GOODRICH PART NUMBER	AIRCRAFT OEM P/N	DESCRIPTION	QTY PER AIRCRAFT	WT
3	23S-2074-2-1		HORIZONTAL STABILIZER LH/RH TTS DE-ICE BOOT (SUPERSEDED BY P/N 29S5D2074-2-1)	2	3.7
4	23S-2074-3-1		VERTICAL STABILIZER TTS DE-ICE BOOT (SUPERSEDED BY P/N 29S5D2074-3-1)	1	1.5

FASTboot® DE-ICE BOOTS

POSITION ID	GOODRICH PART NUMBER	AIRCRAFT OEM P/N	DESCRIPTION	QTY PER AIRCRAFT	WT
3	P29S5D2074-2-1		FASTBOOT® HORIZONTAL STABILIZER LH/RH TTS DE-ICE BOOT	2	3.7
4	P29S5D2074-3-1		FASTBOOT® VERTICAL STABILIZER TTS DE-ICE BOOT	1	1.5

CESSNA 402 (UTILINER/BUSINESSLINER) S/N TO 402-0144

CESSNA 402 (UTILINER/BUSINESSLINER) S/N TO 402-0144

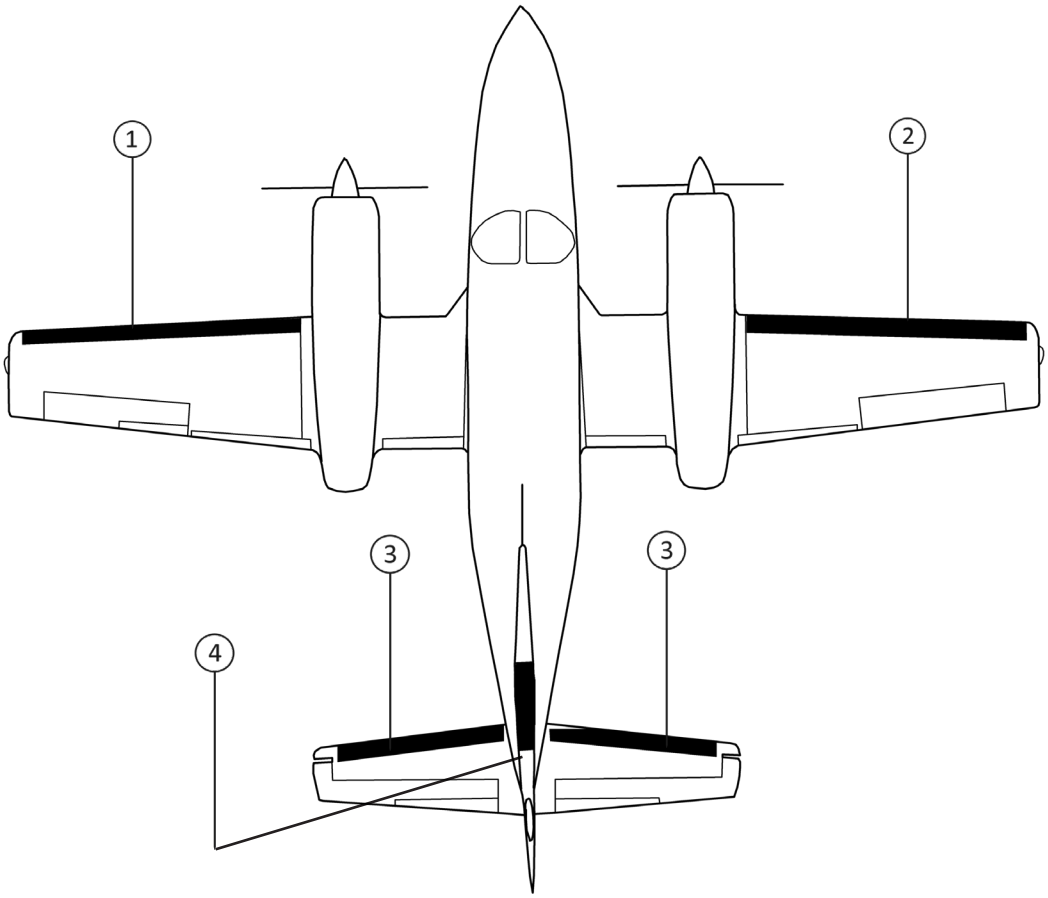

CESSNA 402 (UTILINER/BUSINESSLINER) S/N 402-0145 UP

STANDARD DE-ICE BOOTS

POSITION ID	GOODRICH PART NUMBER	AIRCRAFT OEM P/N	DESCRIPTION	QTY PER AIRCRAFT	WT
1	23S-2010-6-1	0820517-27	NACELLE-TIP LH DE-ICE BOOT	1	4.6
2	23S-2010-6-2	0820517-26	NACELLE-TIP RH DE-ICE BOOT	1	4.7
3	29S5D2074-2-1		HORIZONTAL STABILIZER LH/RH TTS DE-ICE BOOT	2	3.7
4	29S5D2074-3-1		VERTICAL STABILIZER TTS DE-ICE BOOT	1	1.5

TYPE 29 SEWN DE-ICER PROVIDES HIGHER DURABILITY THAN TYPE 23 TUBE TYPE DESIGN

SUPERSEDED STANDARD DE-ICE BOOTS

POSITION ID	GOODRICH PART NUMBER	AIRCRAFT OEM P/N	DESCRIPTION	QTY PER AIRCRAFT	WT
3	23S-2074-2-1		HORIZONTAL STABILIZER LH/RH DE-ICE BOOT (SUPERSEDED BY P/N 29S5D2074-2-1)	2	3.7
4	23S-2074-3-1		VERTICAL STABILIZER DE-ICE BOOT (SUPERSEDED BY P/N 29S5D2074-3-1)	1	1.5

FASTboot® DE-ICE BOOTS

POSITION ID	GOODRICH PART NUMBER	AIRCRAFT OEM P/N	DESCRIPTION	QTY PER AIRCRAFT	WT
3	P29S5D2074-2-1		FASTBOOT® HORIZONTAL STABILIZER LH/RH TTS DE-ICE BOOT	2	3.7
4	P29S5D2074-3-1		FASTBOOT® VERTICAL STABILIZER TTS DE-ICE BOOT	1	1.5

CESSNA 402 (UTILINER/BUSINESSLINER) S/N 402-0145 UP

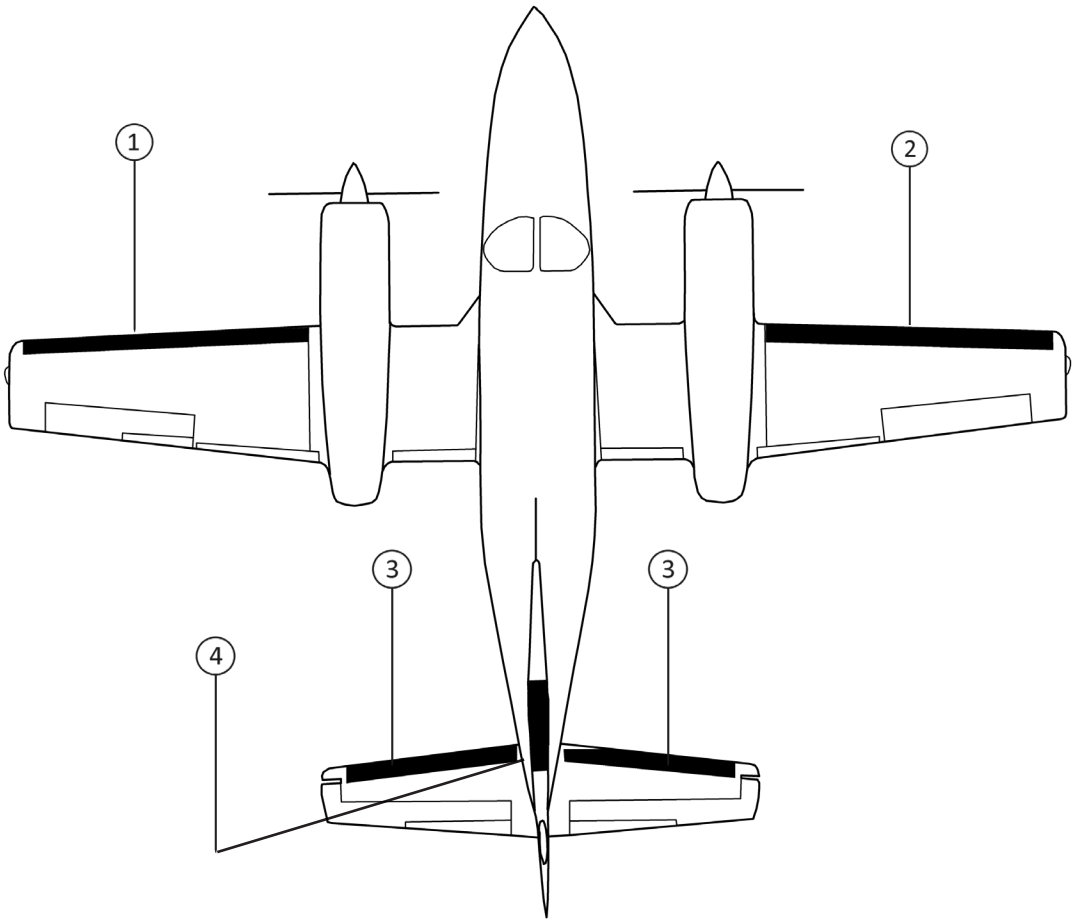

CESSNA 402 (UTILINER/BUSINESSLINER) S/N 402-0145 UP

CESSNA 402A (UTILINER/BUSINESSLINER)

STANDARD DE-ICE BOOTS

POSITION ID	GOODRICH PART NUMBER	AIRCRAFT OEM P/N	DESCRIPTION	QTY PER AIRCRAFT	WT
1	23S-2010-1-1	0820517-9	NACELLE-TIP LH DE-ICE BOOT	1	4.6
2	23S-2010-1-2	0820517-10	NACELLE-TIP RH DE-ICE BOOT	1	4.7
3	29S5D2074-2-1		HORIZONTAL STABILIZER LH/RH TTS DE-ICE BOOT	2	3.7
4	29S5D2074-3-1		VERTICAL STABILIZER TTS DE-ICE BOOT	1	1.5

TYPE 29 SEWN DE-ICER PROVIDES HIGHER DURABILITY THAN TYPE 23 TUBE TYPE DESIGN

SUPERSEDED STANDARD DE-ICE BOOTS

POSITION ID	GOODRICH PART NUMBER	AIRCRAFT OEM P/N	DESCRIPTION	QTY PER AIRCRAFT	WT
3	23S-2074-2-1		HORIZONTAL STABILIZER LH/RH DE-ICE BOOT (SUPERSEDED BY P/N 29S5D2074-2-1)	2	3.7
4	23S-2074-3-1		VERTICAL STABILIZER DE-ICE BOOT (SUPERSEDED BY P/N 29S5D2074-3-1)	1	1.5

FASTboot® DE-ICE BOOTS

POSITION ID	GOODRICH PART NUMBER	AIRCRAFT OEM P/N	DESCRIPTION	QTY PER AIRCRAFT	WT
3	P29S5D2074-2-1		HORIZONTAL STABILIZER LH/RH TTS DE-ICE BOOT	2	3.7
4	P29S5D2074-3-1		VERTICAL STABILIZER TTS DE-ICE BOOT	1	1.5

CESSNA 402A (UTILINER/BUSINESSLINER)

CESSNA 402A (UTILINER/BUSINESSLINER)

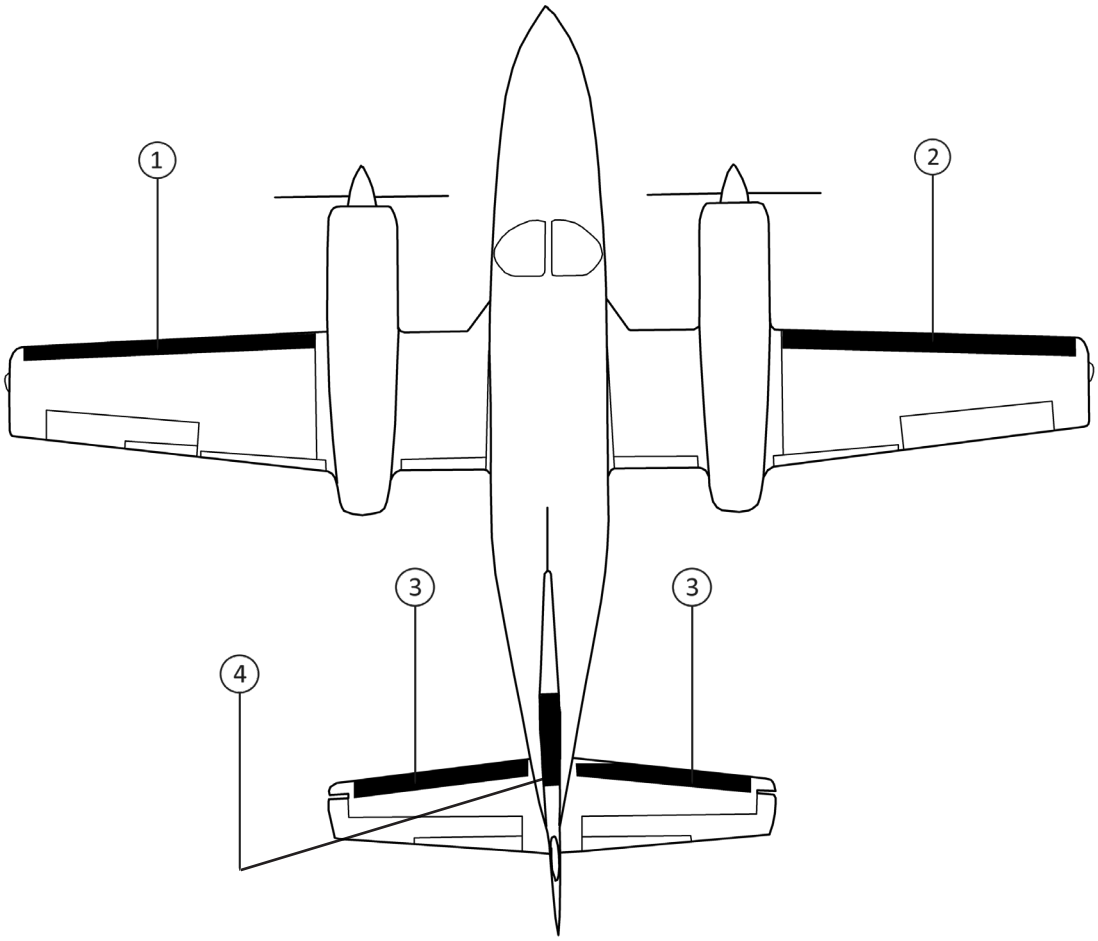

CESSNA 402B (UTILINER/BUSINESSLINER) S/N TO 402B0800

STANDARD DE-ICE BOOTS

POSITION ID	GOODRICH PART NUMBER	AIRCRAFT OEM P/N	DESCRIPTION	QTY PER AIRCRAFT	WT
1	23S-2010-1-1	0820517-9	NACELLE-TIP LH DE-ICE BOOT	1	4.6
2	23S-2010-1-2	0820517-10	NACELLE-TIP RH DE-ICE BOOT	1	4.7
3	29S5D2074-2-1		HORIZONTAL STABILIZER LH/RH TTS DE-ICE BOOT	2	3.7
4	29S5D2074-3-1		VERTICAL STABILIZER TTS DE-ICE BOOT	1	1.5

TYPE 29 SEWN DE-ICER PROVIDES HIGHER DURABILITY THAN TYPE 23 TUBE TYPE DESIGN

SUPERSEDED STANDARD DE-ICE BOOTS

POSITION ID	GOODRICH PART NUMBER	AIRCRAFT OEM P/N	DESCRIPTION	QTY PER AIRCRAFT	WT
3	23S-2074-2-1		HORIZONTAL STABILIZER LH/RH DE-ICE BOOT (SUPERSEDED BY P/N 29S5D2074-2-1)	2	3.7
4	23S-2074-3-1		VERTICAL STABILIZER DE-ICE BOOT (SUPERSEDED BY P/N 29S5D2074-3-1)	1	1.5

FASTboot® DE-ICE BOOTS

POSITION ID	GOODRICH PART NUMBER	AIRCRAFT OEM P/N	DESCRIPTION	QTY PER AIRCRAFT	WT
3	P29S5D2074-2-1		FASTBOOT® HORIZONTAL STABILIZER LH/RH TTS DE-ICE BOOT	2	3.7
4	P29S5D2074-3-1		FASTBOOT® VERTICAL STABILIZER TTS DE-ICE BOOT	1	1.5

CESSNA 402B (UTILINER/BUSINESSLINER) S/N TO 402B0800

CESSNA 402B (UTILINER/BUSINESSLINER) S/N TO 402B0800

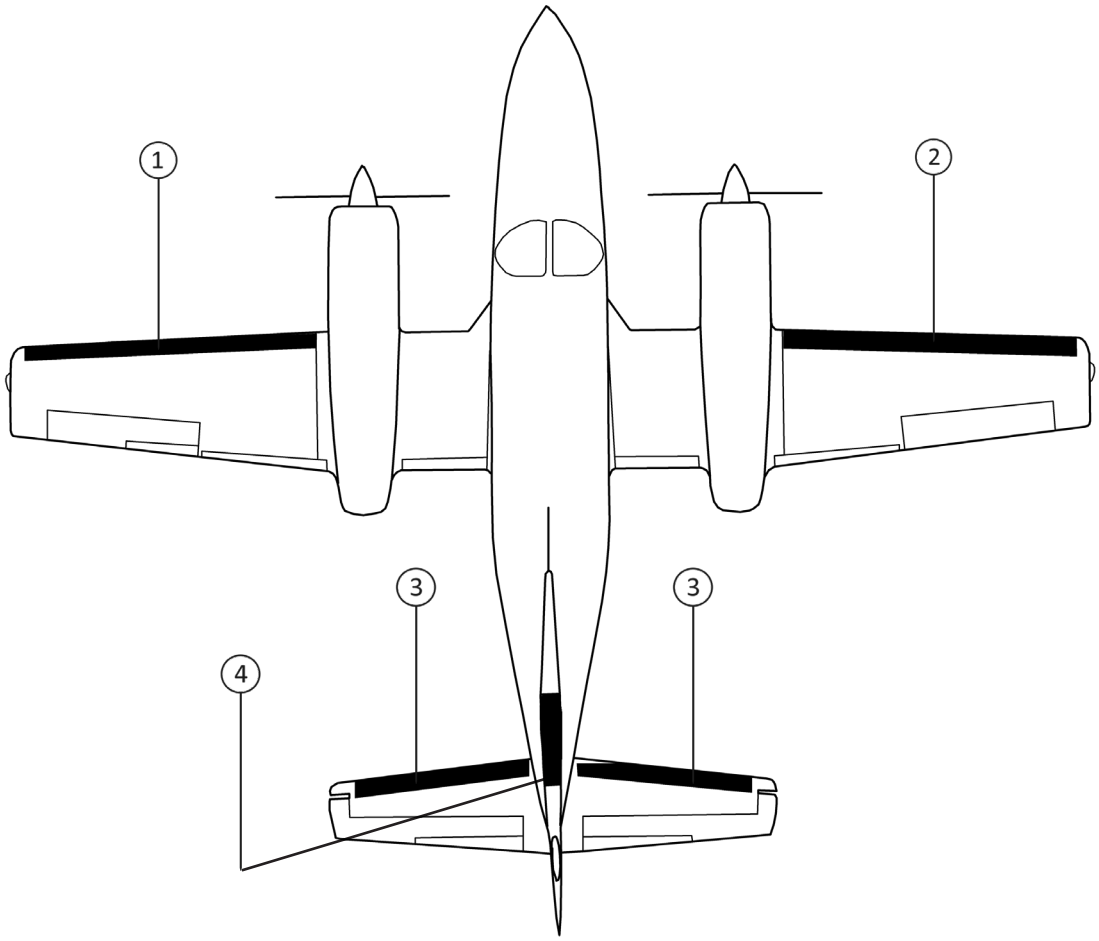

CESSNA 402B (UTILINER/BUSINESSLINER) S/N 402B801 UP

STANDARD DE-ICE BOOTS

POSITION ID	GOODRICH PART NUMBER	AIRCRAFT OEM P/N	DESCRIPTION	QTY PER AIRCRAFT	WT
1	27S-7D5070-05		FUSELAGE-NACELLE LH DE-ICE BOOT	1	1.6
2	27S-7D5070-06		FUSELAGE-NACELLE RH DE-ICE BOOT	1	1.6
3	27S-7D5070-03		NACELLE-TIP LH DE-ICE BOOT	1	3.3
4	27S-7D5070-04		NACELLE-TIP RH DE-ICE BOOT	1	3.3
5	27S-7D5070-11		HORIZONTAL STABILIZER LH/RH DE-ICE BOOT	2	2.2
6	27S-7D5070-13		VERTICAL STABILIZER DE-ICE BOOT	1	1.2

FASTboot® DE-ICE BOOTS

POSITION ID	GOODRICH PART NUMBER	AIRCRAFT OEM P/N	DESCRIPTION	QTY PER AIRCRAFT	WT
1	P27S-7D5070-05		FASTBOOT® FUSELAGE-NACELLE LH DE-ICE BOOT	1	1.6
2	P27S-7D5070-06		FASTBOOT® FUSELAGE-NACELLE RH DE-ICE BOOT	1	1.6
3	P27S-7D5070-03		FASTBOOT® NACELLE-TIP LH DE-ICE BOOT	1	3.3
4	P27S-7D5070-04		FASTBOOT® NACELLE-TIP RH DE-ICE BOOT	1	3.3
5	P27S-7D5070-11		FASTBOOT® HORIZONTAL STABILIZER LH/RH DE-ICE BOOT	2	2.2
6	P27S-7D5070-13		FASTBOOT® VERTICAL STABILIZER DE-ICE BOOT	1	1.2

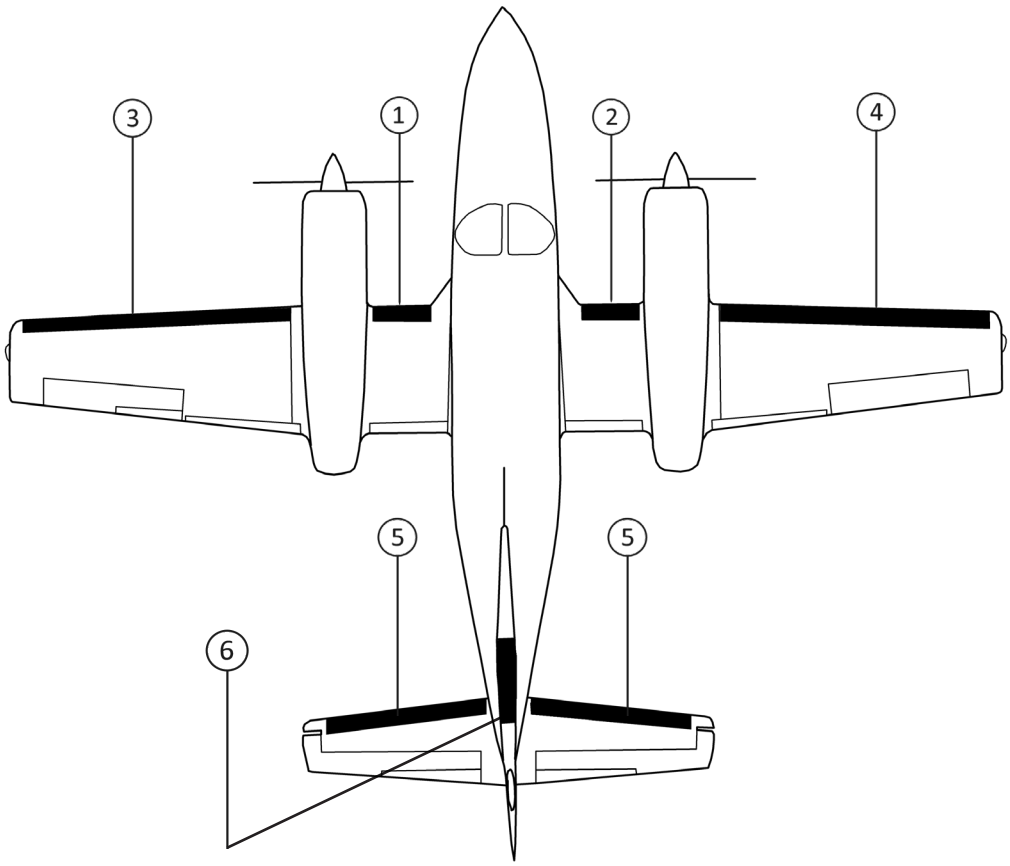

De-ice boot care products

DE-ICER PATCHES AND PIN HOLE KITS ALSO AVAILABLE

Aerospace Protectant™ (32 fl. oz.) P/N 74-451-237-32

Goodrich® Aerospace Protectant™

- Approved for use on all Goodrich de-icers
- Near 100 percent prevention of UV-caused slow fade
- Resistance to dust, soiling and staining
- Water-based formula is environmentally friendly
- Apply as needed – no surface stripping required

Aerospace Cleaner™ (32 fl. oz.) P/N 74-451-238-32

Goodrich® Aerospace Cleaner™

- Approved for use on all Goodrich de-icers
- Can be used on all water-safe materials
- Water-based formula is environmentally friendly
- Apply as needed – no surface stripping required
- Great for removing dirt, grime and bugs

AgeMaster® #1 P/N 74-451-127

AgeMaster® #1

- Rubber preservative that protects against weathering, ozone and ultraviolet rays
- Apply six months after new de-icer is installed
- Reapply every 150 flight hours (twice yearly)
- One quart covers approximately 90 sq. ft. (8.3 sq. m.)

ICEX®II - 6oz
ICEX®II - Pump
ICEX®II - Quart

ICEX®II

- Ice adhesion inhibitor that enhances de-icer performance
- Apply every 50 flight hours during icing season
- One quart covers approximately 400 sq. ft. (37 sq. m)

ShineMaster™ Prep P/N 74-451-179
ShineMaster™ P/N 74-451-178

ShineMaster™

- Cosmetic coating that provides a high-luster shine
- Clean de-icer with ShineMaster Prep before applying 2-3 light coats
- One pint covers approximately 200 sq. ft. (18.6 sq. m)
- Reapply as desired

Specifications subject to change without notice.

CESSNA 402C (UTILINER/BUSINESSLINER)

STANDARD DE-ICE BOOTS

POSITION ID	GOODRICH PART NUMBER	AIRCRAFT OEM P/N	DESCRIPTION	QTY PER AIRCRAFT	WT
1	27S-7D5070-41		INBOARD WING LH DE-ICE BOOT	1	1.5
2	27S-7D5070-42		INBOARD WING RH DE-ICE BOOT	1	1.5
3	27S-7D5070-37		NACELLE-TIP LH DE-ICE BOOT	1	4.7
4	27S-7D5070-38		NACELLE-TIP RH DE-ICE BOOT	1	4.7
5	27S-7D5070-11		HORIZONTAL STABILIZER LH/RH DE-ICE BOOT	2	2.2
6	27S-7D5070-14		VERTICAL STABILIZER DE-ICE BOOT	1	1.5

OPTIONAL STANDARD DE-ICE BOOTS

POSITION ID	GOODRICH PART NUMBER	AIRCRAFT OEM P/N	DESCRIPTION	QTY PER AIRCRAFT	WT
3	27S-7D5070-59		NACELLE-TIP LH DE-ICE BOOT	1	4.7
4	27S-7D5070-60		NACELLE-TIP RH DE-ICE BOOT	1	4.7

*FOR AIRCRAFT EQUIPPED WITH WING TIP RECOGNITION LIGHTS

FASTboot® DE-ICE BOOTS

POSITION ID	GOODRICH PART NUMBER	AIRCRAFT OEM P/N	DESCRIPTION	QTY PER AIRCRAFT	WT
1	P27S-7D5070-41		FASTBOOT® INBOARD WING LH DE-ICE BOOT	1	1.5
2	P27S-7D5070-42		FASTBOOT® INBOARD WING RH DE-ICE BOOT	1	1.5
3	P27S-7D5070-37		FASTBOOT® NACELLE-TIP LH DE-ICE BOOT	1	4.7
4	P27S-7D5070-38		FASTBOOT® NACELLE-TIP RH DE-ICE BOOT	1	4.7
5	P27S-7D5070-11		FASTBOOT® HORIZONTAL STABILIZER LH/RH DE-ICE BOOT	2	2.2
6	P27S-7D5070-14		FASTBOOT® VERTICAL STABILIZER DE-ICE BOOT	1	1.5

OPTIONAL FASTboot® DE-ICE BOOTS

POSITION ID	GOODRICH PART NUMBER	AIRCRAFT OEM P/N	DESCRIPTION	QTY PER AIRCRAFT	WT
3	P27S-7D5070-59*		FASTBOOT® NACELLE-TIP LH DE-ICE BOOT	1	4.7
4	P27S-7D5070-60*		FASTBOOT® NACELLE-TIP RH DE-ICE BOOT	1	4.7

*FOR AIRCRAFT EQUIPPED WITH WING TIP RECOGNITION LIGHTS

CESSNA 402C (UTILINER/BUSINESSLINER)

CESSNA 402C (UTILINER/BUSINESSLINER)

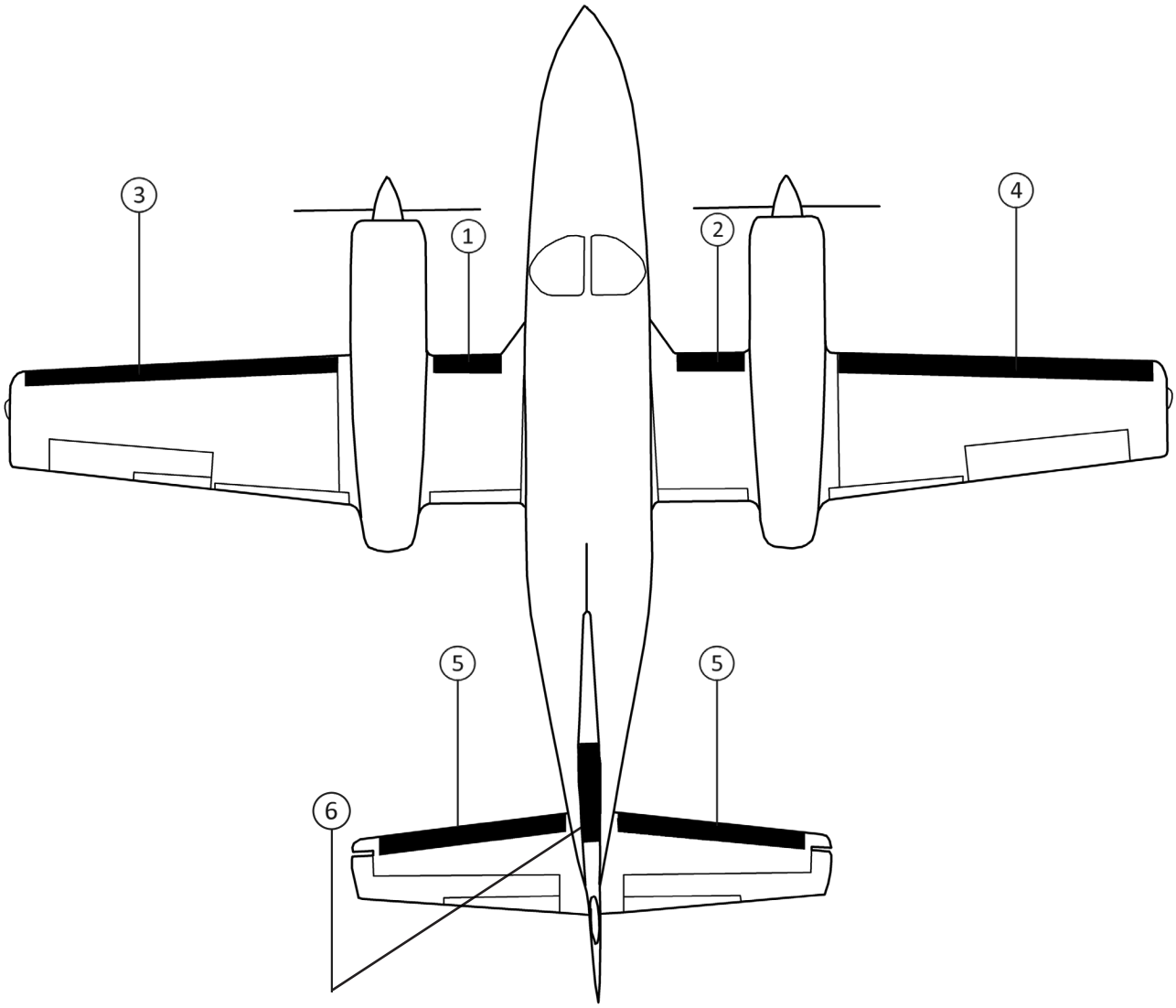

CESSNA 404 (TITAN) TO S/N 404-0600

CESSNA 404 (TITAN) TO S/N 404-0600

STANDARD DE-ICE BOOTS

POSITION ID	GOODRICH PART NUMBER	AIRCRAFT OEM P/N	DESCRIPTION	QTY PER AIRCRAFT	WT
1	27S-7D5070-33	9910277-9	FAIRING LH DE-ICE BOOT	1	1.1
2	27S-7D5070-34	9910277-10	FAIRING RH DE-ICE BOOT	1	1.1
3	27S-7D5070-17	9910277-7	FUSELAGE-NACELLE LH DE-ICE BOOT	1	1.1
4	27S-7D5070-18	9910277-8	FUSELAGE-NACELLE RH DE-ICE BOOT	1	1.1
5	27S-7D5070-39	9910277-13	NACELLE-TIP LH DE-ICE BOOT	1	5.5
6	27S-7D5070-36	9910277-12	NACELLE-TIP RH DE-ICE BOOT	1	5.5
7	27S-7D5070-21	9910277-5	HORIZONTAL STABILIZER LH/RH DE-ICE BOOT	2	2.6
8	27S-7D5070-23	9910277-14	VERTICAL STABILIZER DE-ICE BOOT	1	1.6

FASTboot® DE-ICE BOOTS

POSITION ID	GOODRICH PART NUMBER	AIRCRAFT OEM P/N	DESCRIPTION	QTY PER AIRCRAFT	WT
1	P27S-7D5070-33	9910277-9	FASTBOOT® FAIRING LH DE-ICE BOOT	1	1.1
2	P27S-7D5070-34	9910277-10	FASTBOOT® FAIRING RH DE-ICE BOOT	1	1.1
3	P27S-7D5070-17	9910277-7	FASTBOOT® FUSELAGE-NACELLE LH DE-ICE BOOT	1	1.1
4	P27S-7D5070-18	9910277-8	FASTBOOT® FUSELAGE-NACELLE RH DE-ICE BOOT	1	1.1
5	P27S-7D5070-39	9910277-13	FASTBOOT® NACELLE-TIP LH DE-ICE BOOT	1	5.5
6	P27S-7D5070-36	9910277-12	FASTBOOT® NACELLE-TIP RH DE-ICE BOOT	1	5.5
7	P27S-7D5070-21	9910277-5	FASTBOOT® HORIZONTAL STABILIZER LH/RH DE-ICE BOOT	2	2.6
8	P27S-7D5070-23	9910277-14	FASTBOOT® VERTICAL STABILIZER DE-ICE BOOT	1	1.6

CESSNA 404 (TITAN) TO S/N 404-0600

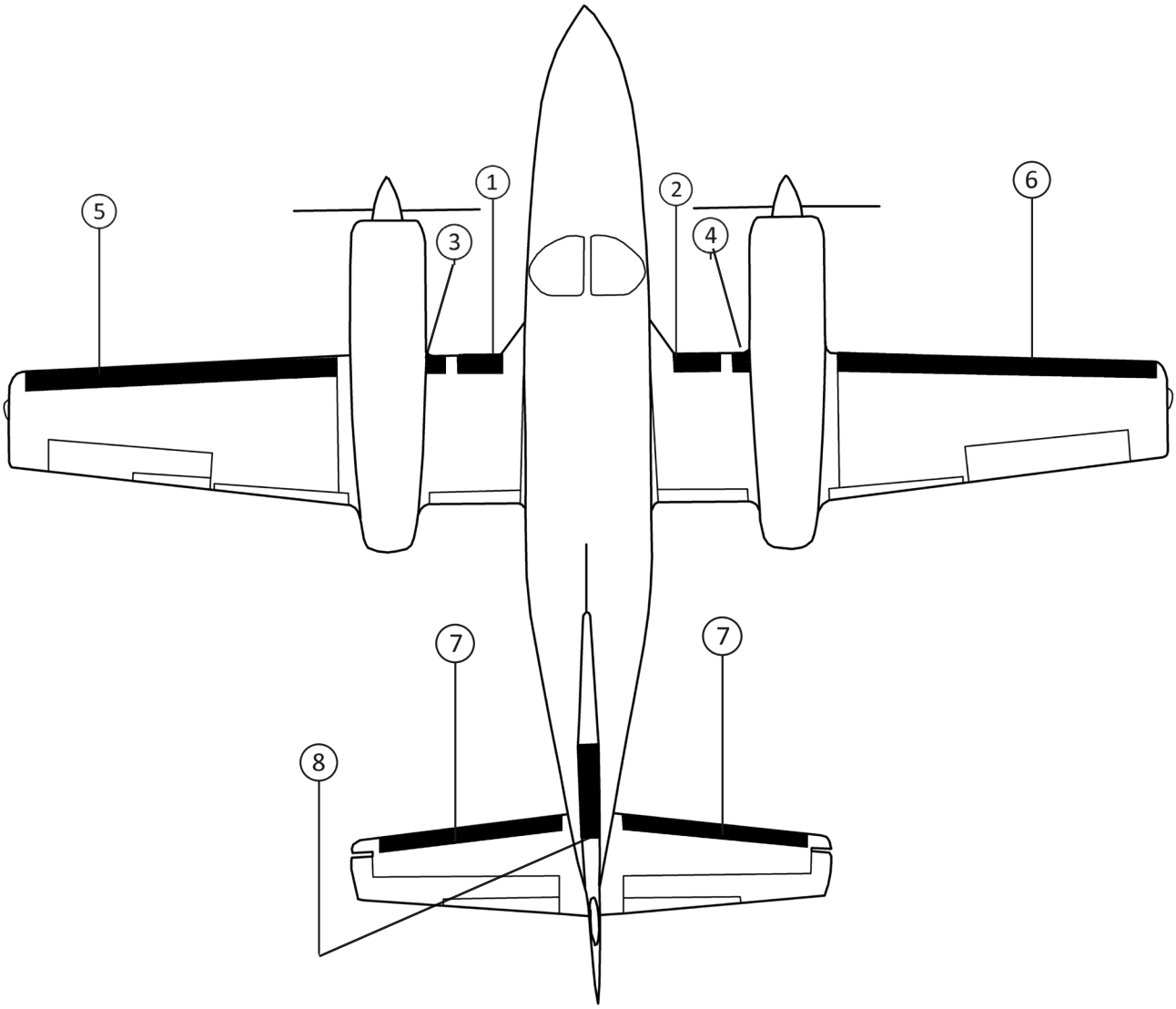

CESSNA 404 (TITAN) TO S/N 404-0600

CESSNA 404 (TITAN) S/N 404-0601 UP

STANDARD DE-ICE BOOTS

POSITION ID	GOODRICH PART NUMBER	AIRCRAFT OEM P/N	DESCRIPTION	QTY PER AIRCRAFT	WT
1	27S-7D5070-33	9910277-9	FAIRING LH DE-ICE BOOT	1	1.1
2	27S-7D5070-34	9910277-10	FAIRING RH DE-ICE BOOT	1	1.1
3	27S-7D5070-17	9910277-7	FUSELAGE-NACELLE LH DE-ICE BOOT	1	1.1
4	27S-7D5070-18	9910277-8	FUSELAGE-NACELLE RH DE-ICE BOOT	1	1.1
5	27S-7D5070-45	9910277-15	NACELLE-TIP LH DE-ICE BOOT	1	6.1
6	27S-7D5070-46	9910277-16	NACELLE-TIP RH DE-ICE BOOT	1	6.1
7	27S-7D5070-21	9910277-5	HORIZONTAL STABILIZER LH/RH DE-ICE BOOT	2	2.6
8	27S-7D5070-23	9910277-14	VERTICAL STABILIZER DE-ICE BOOT	1	1.6

FASTboot® DE-ICE BOOTS

POSITION ID	GOODRICH PART NUMBER	AIRCRAFT OEM P/N	DESCRIPTION	QTY PER AIRCRAFT	WT
1	P27S-7D5070-33	9910277-9	FASTBOOT® FAIRING LH DE-ICE BOOT	1	1.1
2	P27S-7D5070-34	9910277-10	FASTBOOT® FAIRING RH DE-ICE BOOT	1	1.1
3	P27S-7D5070-17	9910277-7	FASTBOOT® FUSELAGE-NACELLE LH DE-ICE BOOT	1	1.1
4	P27S-7D5070-18	9910277-8	FASTBOOT® FUSELAGE-NACELLE RH DE-ICE BOOT	1	1.1
5	P27S-7D5070-45	9910277-15	FASTBOOT® NACELLE-TIP LH DE-ICE BOOT	1	6.1
6	P27S-7D5070-46	9910277-16	FASTBOOT® NACELLE-TIP RH DE-ICE BOOT	1	6.1
7	P27S-7D5070-21	9910277-5	FASTBOOT® HORIZONTAL STABILIZER LH/RH DE-ICE BOOT	2	2.6
8	P27S-7D5070-23	9910277-14	FASTBOOT® VERTICAL STABILIZER DE-ICE BOOT	1	1.6

CESSNA 404 (TITAN) S/N 404-0601 UP

CESSNA 404 (TITAN) S/N 404-0601 UP

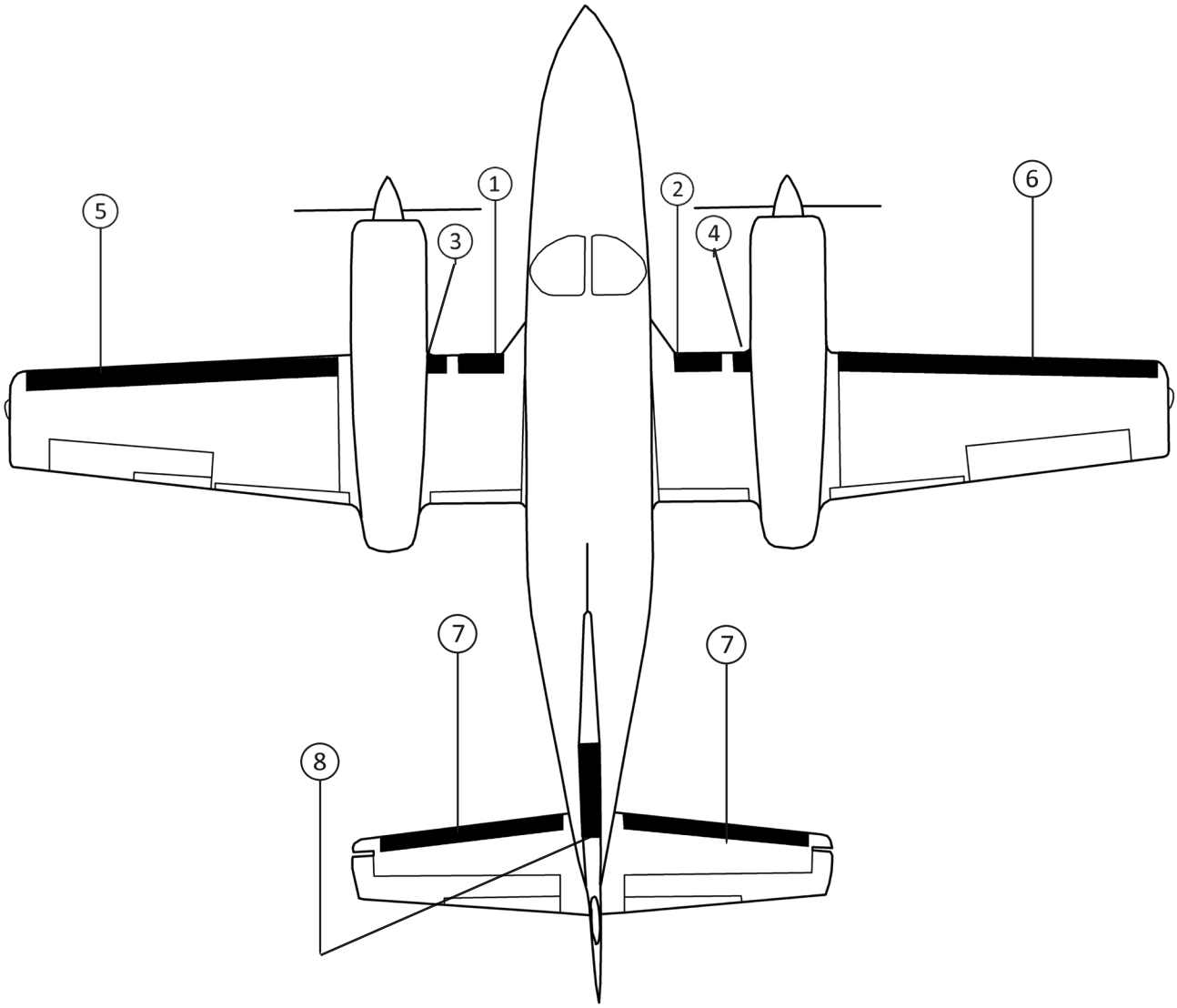

CESSNA (REIMS) F-406

STANDARD DE-ICE BOOTS

POSITION ID	GOODRICH PART NUMBER	AIRCRAFT OEM P/N	DESCRIPTION	QTY PER AIRCRAFT	WT
1	27S-7D5109-01		FUSELAGE-NACELLE LH DE-ICE BOOT	1	1.9
2	27S-7D5109-02		FUSELAGE-NACELLE RH DE-ICE BOOT	1	1.9
3	28S-7D5109-05		FUSELAGE-NACELLE EXTENSION DE-ICE BOOT	2	0.2
4	27S-7D5172-03		NACELLE-TIP LH DE-ICE BOOT	1	6.8
5	27S-7D5172-04		NACELLE-TIP RH DE-ICE BOOT	1	6.8
6	27S-7D5172-05		HORIZONTAL STABILIZER LH DE-ICE BOOT	1	3.1
7	27S-7D5172-06		HORIZONTAL STABILIZER RH DE-ICE BOOT	1	3.1
8	27S-7D5070-23	9910277-14	VERTICAL STABILIZER DE-ICE BOOT	1	1.6

FASTboot® DE-ICE BOOTS

POSITION ID	GOODRICH PART NUMBER	AIRCRAFT OEM P/N	DESCRIPTION	QTY PER AIRCRAFT	WT
1	P27S-7D5109-01		FASTBOOT® FUSELAGE-NACELLE LH DE-ICE BOOT	1	1.9
2	P27S-7D5109-02		FASTBOOT® FUSELAGE-NACELLE RH DE-ICE BOOT	1	1.9
3	P28S-7D5109-05		FASTBOOT® FUSELAGE-NACELLE EXTENSION DE-ICE BOOT	2	0.2
4	P27S-7D5172-03		FASTBOOT® NACELLE-TIP LH DE-ICE BOOT	1	6.8
5	P27S-7D5172-04		FASTBOOT® NACELLE-TIP RH DE-ICE BOOT	1	6.8
6	P27S-7D5172-05		FASTBOOT® HORIZONTAL STABILIZER LH DE-ICE BOOT	1	3.1
7	P27S-7D5172-06		FASTBOOT® HORIZONTAL STABILIZER RH DE-ICE BOOT	1	3.1
8	P27S-7D5070-23		FASTBOOT® VERTICAL STABILIZER DE-ICE BOOT	1	1.6

CESSNA (REIMS) F-406

CESSNA (REIMS) F-406

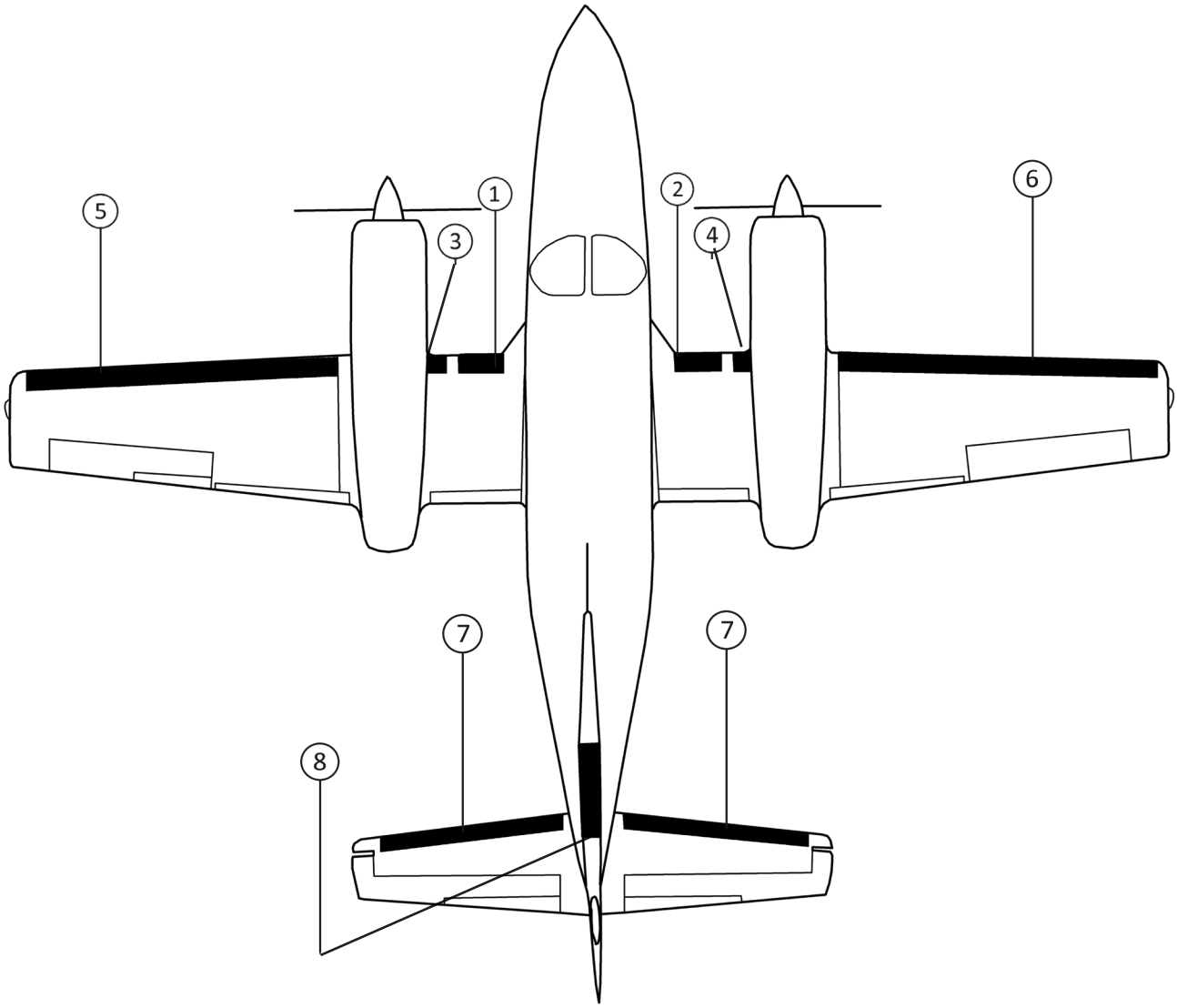

CESSNA 411

STANDARD DE-ICE BOOTS

POSITION ID	GOODRICH PART NUMBER	AIRCRAFT OEM P/N	DESCRIPTION	QTY PER AIRCRAFT	WT
1	29S5D2074-1-1		NACELLE-TIP LH TTS DE-ICE BOOT	1	6.0
2	29S5D2074-1-2		NACELLE-TIP RH TTS DE-ICE BOOT	1	6.0
3	29S5D2074-2-1		HORIZONTAL STABILIZER LH/RH TTS DE-ICE BOOT	2	3.7
4	29S5D2074-3-1		VERTICAL STABILIZER TTS DE-ICE BOOT	1	1.5

TYPE 29 SEWN DE-ICER PROVIDES HIGHER DURABILITY THAN TYPE 23 TUBE TYPE DESIGN

SUPERSEDED STANDARD DE-ICE BOOTS

POSITION ID	GOODRICH PART NUMBER	AIRCRAFT OEM P/N	DESCRIPTION	QTY PER AIRCRAFT	WT
1	23S-2074-1-1		NACELLE-TIP LH TTS DE-ICE BOOT (SUPERSEDED BY P/N 29S5D2074-1-1)	1	6.0
2	23S-2074-1-2		NACELLE-TIP RH TTS DE-ICE BOOT (SUPERSEDED BY P/N 29S5D2074-1-2)	1	6.0
3	23S-2074-2-1		HORIZONTAL STABILIZER LH/RH TTS DE-ICE BOOT (SUPERSEDED BY P/N 29S5D2074-2-1)	2	3.7
4	23S-2074-3-1		VERTICAL STABILIZER TTS DE-ICE BOOT (SUPERSEDED BY P/N 29S5D2074-3-1)	1	1.5

FASTboot® DE-ICE BOOTS

POSITION ID	GOODRICH PART NUMBER	AIRCRAFT OEM P/N	DESCRIPTION	QTY PER AIRCRAFT	WT
1	P29S5D2074-1-1		FASTBOOT® NACELLE-TIP LH TTS DE-ICE BOOT	1	6.0
2	P29S5D2074-1-2		FASTBOOT® NACELLE-TIP RH TTS DE-ICE BOOT	1	6.0
3	P29S5D2074-2-1		FASTBOOT® HORIZONTAL STABILIZER LH/RH TTS DE-ICE BOOT	2	3.7
4	P29S5D2074-3-1		FASTBOOT® VERTICAL STABILIZER TTS DE-ICE BOOT	1	1.5

CESSNA 411

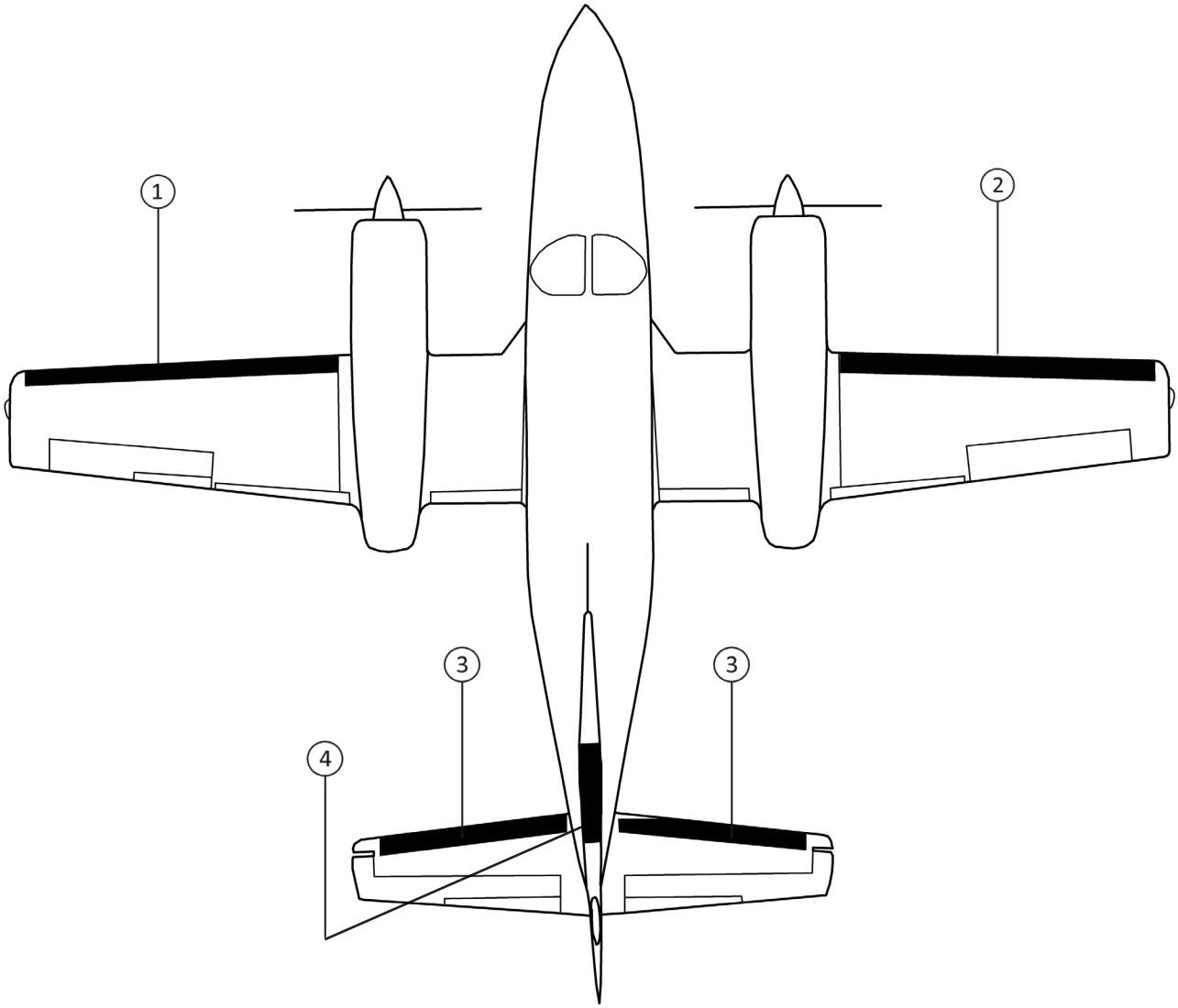

CESSNA 414 (CHANCELLOR) S/N TO 414-0600

STANDARD DE-ICE BOOTS

POSITION ID	GOODRICH PART NUMBER	AIRCRAFT OEM P/N	DESCRIPTION	QTY PER AIRCRAFT	WT
1	23S-2010-1-1	0820517-9	NACELLE-TIP LH DE-ICE BOOT	1	4.3
2	23S-2010-1-2	0820517-10	NACELLE-TIP RH DE-ICE BOOT	1	4.4
3	29S5D2074-2-1		HORIZONTAL STABILIZER LH/RH TTS DE-ICE BOOT	2	3.7
4	29S5D2074-3-1		VERTICAL STABILIZER TTS DE-ICE BOOT	1	1.5

TYPE 29 SEWN DE-ICER PROVIDES HIGHER DURABILITY THAN TYPE 23 TUBE TYPE DESIGN

SUPERSEDED STANDARD DE-ICE BOOTS

POSITION ID	GOODRICH PART NUMBER	AIRCRAFT OEM P/N	DESCRIPTION	QTY PER AIRCRAFT	WT
3	23S-2074-2-1		HORIZONTAL STABILIZER LH/RH DE-ICE BOOT (SUPERSEDED BY P/N 29S5D2074-2-1)	2	3.7
4	23S-2074-3-1		VERTICAL STABILIZER DE-ICE BOOT (SUPERSEDED BY P/N 29S5D2074-3-1)	1	1.5

FASTboot® DE-ICE BOOTS

POSITION ID	GOODRICH PART NUMBER	AIRCRAFT OEM P/N	DESCRIPTION	QTY PER AIRCRAFT	WT
3	P29S5D2074-2-1		FASTBOOT® HORIZONTAL STABILIZER LH/RH TTS DE-ICE BOOT	2	3.7
4	P29S5D2074-3-1		FASTBOOT® VERTICAL STABILIZER TTS DE-ICE BOOT	1	1.5

CESSNA 414 (CHANCELLOR) S/N TO 414-0600

CESSNA 414 (CHANCELLOR) S/N TO 414-0600

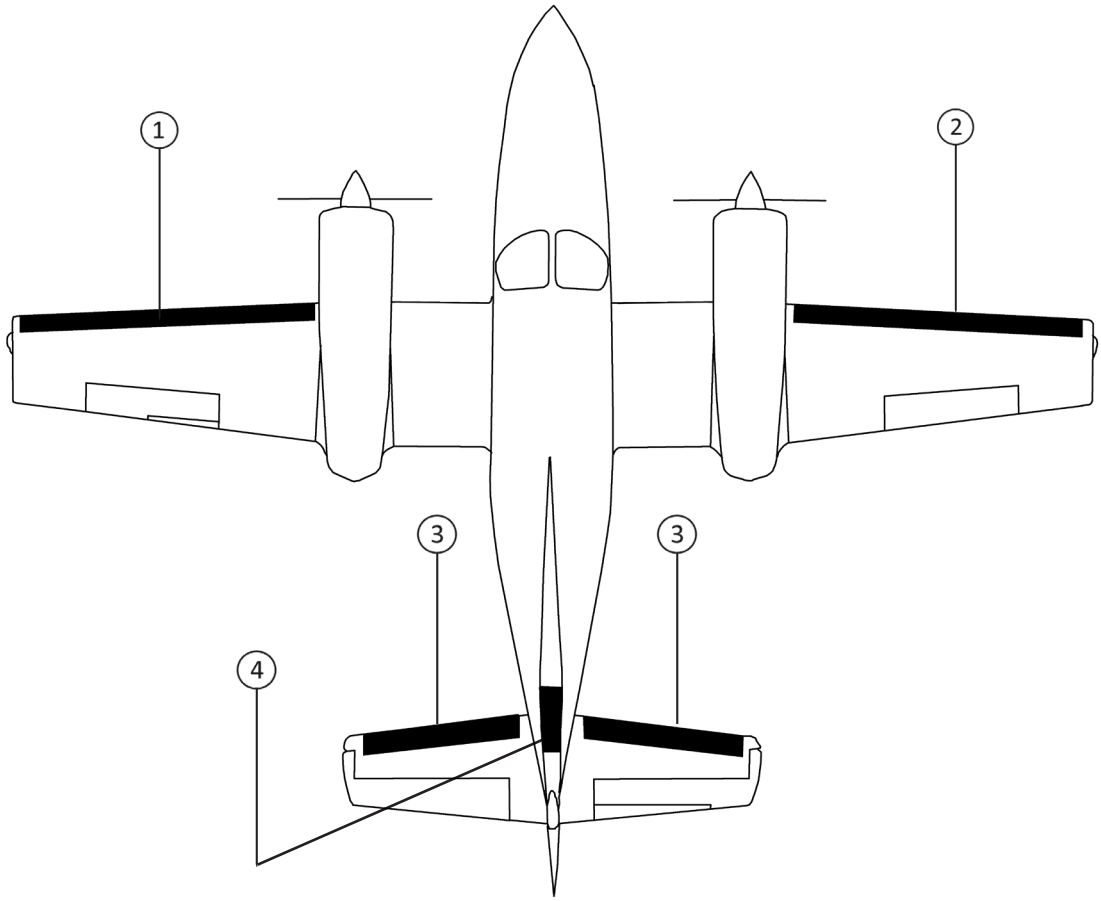

CESSNA 414 (CHANCELLOR) S/N 414-0601 UP

STANDARD DE-ICE BOOTS

POSITION ID	GOODRICH PART NUMBER	AIRCRAFT OEM P/N	DESCRIPTION	QTY PER AIRCRAFT	WT
1	27S-7D5070-01		FUSELAGE-NACELLE LH DE-ICE BOOT	1	1.3
2	27S-7D5070-02		FUSELAGE-NACELLE RH DE-ICE BOOT	1	1.3
3	27S-7D5070-03		NACELLE-TIP LH DE-ICE BOOT	1	3.3
4	27S-7D5070-04		NACELLE-TIP RH DE-ICE BOOT	1	3.3
5	27S-7D5070-11		HORIZONTAL STABILIZER LH/RH DE-ICE BOOT	2	2.2
6	27S-7D5070-13		VERTICAL STABILIZER DE-ICE BOOT	1	1.2

FASTboot® DE-ICE BOOTS

POSITION ID	GOODRICH PART NUMBER	AIRCRAFT OEM P/N	DESCRIPTION	QTY PER AIRCRAFT	WT
1	P27S-7D5070-01		FASTBOOT® FUSELAGE-NACELLE LH DE-ICE BOOT	1	1.3
2	P27S-7D5070-02		FASTBOOT® FUSELAGE-NACELLE RH DE-ICE BOOT	1	1.3
3	P27S-7D5070-03		FASTBOOT® NACELLE-TIP LH DE-ICE BOOT	1	3.3
4	P27S-7D5070-04		FASTBOOT® NACELLE-TIP RH DE-ICE BOOT	1	3.3
5	P27S-7D5070-11		FASTBOOT® HORIZONTAL STABILIZER LH/RH DE-ICE BOOT	2	2.2
6	P27S-7D5070-13		FASTBOOT® VERTICAL STABILIZER DE-ICE BOOT	1	1.2

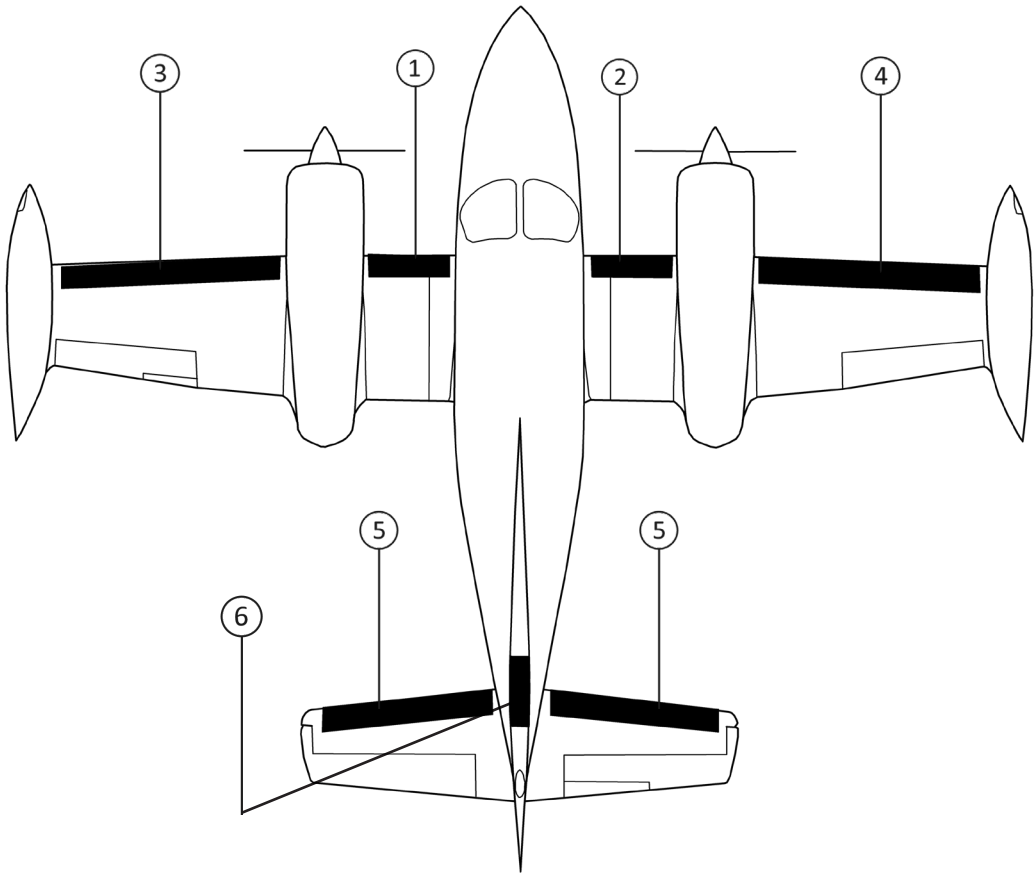

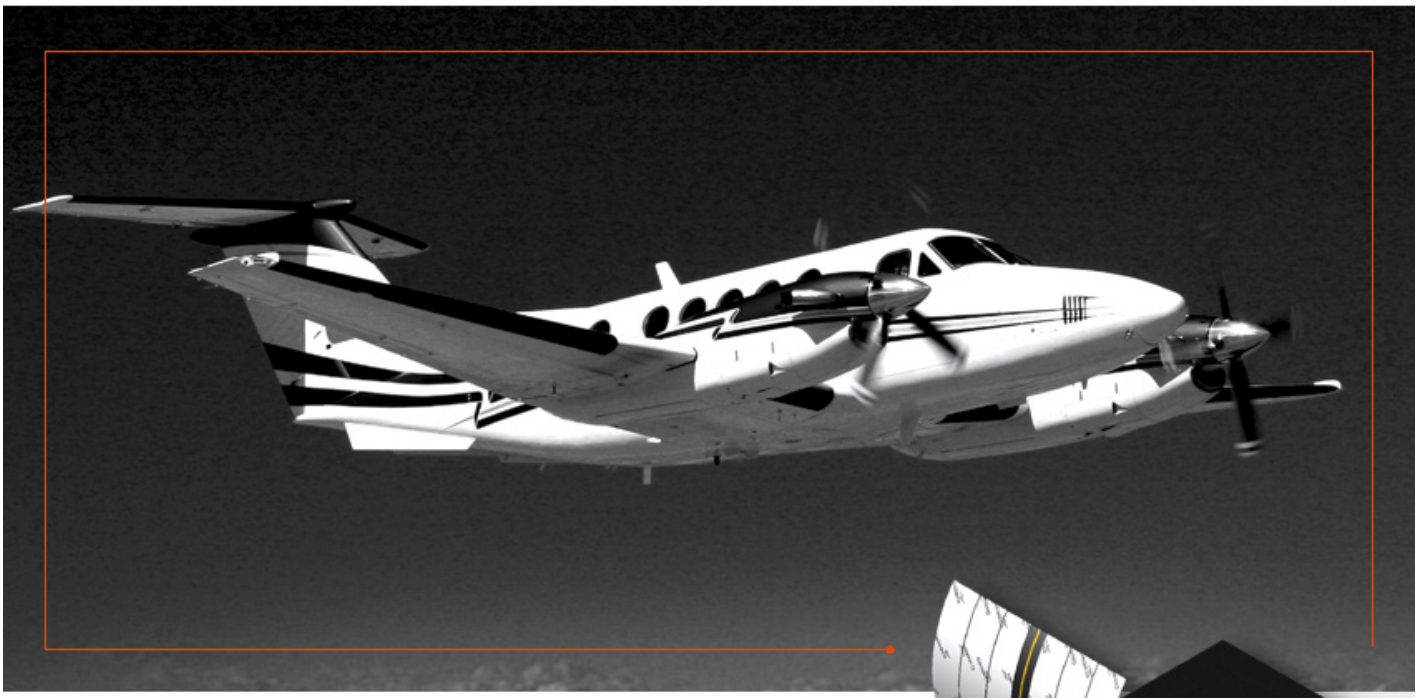

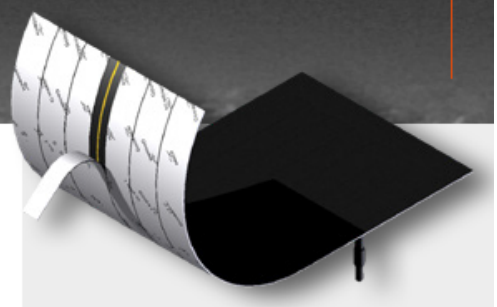

GOODRICH FASTBOOT® PNEUMATIC DE-ICERS

PROVEN PERFORMANCE

Over 20 years experience manufacturing and installing Pressure Sensitive Adhesive (PSA) de-icers

Collins Aerospace manufactures Goodrich pneumatic de-icing boots with our patented FASTboot adhesive system, which saves you time and improves aircraft readiness.

Goodrich FASTboot pneumatic de-icers take the guess work out of de-icer installation. The pre-applied adhesive provides a smooth and consistent de-icer bond at a fraction of the time needed for application of standard de-icers. Simply add the primer to the clean leading-edge surface and allow a five-minute dry time. Following the approved installation procedure, peel and stick the pneumatic de-icer to the leading edge of your aircraft.

KEY BENEFITS/FEATURES

- Reduces installation time
- FASTboot de-icers can be flown immediately
- De-icers can be inflated two hours after installation
- Reduces hazardous waste through pre-applied adhesive
- Initial installation guarantee

Collins Aerospace

collinsaerospace.com/deicing

CESSNA 414A (CHANCELLOR) WITHOUT LIGHTS

STANDARD DE-ICE BOOTS

POSITION ID	GOODRICH PART NUMBER	AIRCRAFT OEM P/N	DESCRIPTION	QTY PER AIRCRAFT	WT
1	27S-7D5070-07		FUSELAGE-NACELLE LH DE-ICE BOOT	1	1.2
2	27S-7D5070-08		FUSELAGE-NACELLE RH DE-ICE BOOT	1	1.2
3	27S-7D5070-37		NACELLE-TIP LH DE-ICE BOOT	1	4.7
4	27S-7D5070-38		NACELLE-TIP RH DE-ICE BOOT	1	4.7
5	27S-7D5070-11		HORIZONTAL STABILIZER LH/RH DE-ICE BOOT	2	2.2
6	27S-7D5070-14		VERTICAL STABILIZER DE-ICE BOOT	1	1.5

FASTboot® DE-ICE BOOTS

POSITION ID	GOODRICH PART NUMBER	AIRCRAFT OEM P/N	DESCRIPTION	QTY PER AIRCRAFT	WT
1	P27S-7D5070-07		FASTBOOT® FUSELAGE-NACELLE LH DE-ICE BOOT	1	1.2
2	P27S-7D5070-08		FASTBOOT® FUSELAGE-NACELLE RH DE-ICE BOOT	1	1.2
3	P27S-7D5070-37		FASTBOOT® NACELLE-TIP LH DE-ICE BOOT	1	4.7
4	P27S-7D5070-38		FASTBOOT® NACELLE-TIP RH DE-ICE BOOT	1	4.7
5	P27S-7D5070-11		FASTBOOT® HORIZONTAL STABILIZER LH/RH DE-ICE BOOT	2	2.2
6	P27S-7D5070-14		FASTBOOT® VERTICAL STABILIZER DE-ICE BOOT	1	1.5

CESSNA 414A (CHANCELLOR) WITHOUT LIGHTS

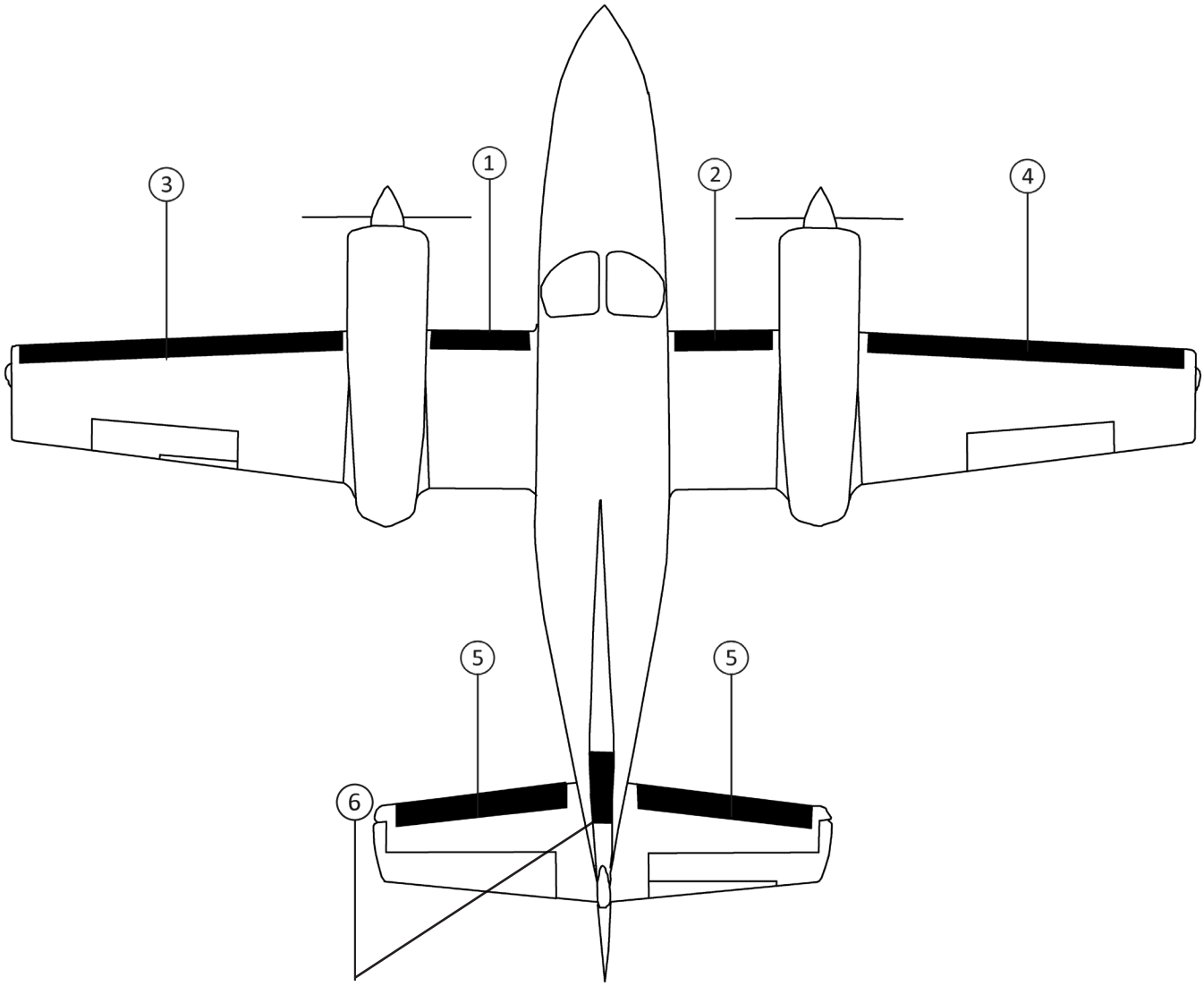

CESSNA 414A (CHANCELLOR) WITHOUT LIGHTS

CESSNA 414A (CHANCELLOR) WITH LIGHTS

STANDARD DE-ICE BOOTS

POSITION ID	GOODRICH PART NUMBER	AIRCRAFT OEM P/N	DESCRIPTION	QTY PER AIRCRAFT	WT
1	27S-7D5070-07		FUSELAGE-NACELLE LH DE-ICE BOOT	1	1.2
2	27S-7D5070-08		FUSELAGE-NACELLE RH DE-ICE BOOT	1	1.2
3	27S-7D5070-59		NACELLE-TIP LH DE-ICE BOOT	1	4.7
4	27S-7D5070-60		NACELLE-TIP RH DE-ICE BOOT	1	4.7
5	27S-7D5070-11		HORIZONTAL STABILIZER LH/RH DE-ICE BOOT	2	2.2
6	27S-7D5070-14		VERTICAL STABILIZER DE-ICE BOOT	1	1.5

FASTboot® DE-ICE BOOTS

POSITION ID	GOODRICH PART NUMBER	AIRCRAFT OEM P/N	DESCRIPTION	QTY PER AIRCRAFT	WT
1	P27S-7D5070-07		FASTBOOT® FUSELAGE-NACELLE LH DE-ICE BOOT	1	1.2
2	P27S-7D5070-08		FASTBOOT® FUSELAGE-NACELLE RH DE-ICE BOOT	1	1.2
3	P27S-7D5070-59		FASTBOOT® NACELLE-TIP LH DE-ICE BOOT	1	4.7
4	P27S-7D5070-60		FASTBOOT® NACELLE-TIP RH DE-ICE BOOT	1	4.7
5	P27S-7D5070-11		FASTBOOT® HORIZONTAL STABILIZER LH/RH DE-ICE BOOT	2	2.2
6	P27S-7D5070-14		FASTBOOT® VERTICAL STABILIZER DE-ICE BOOT	1	1.5

CESSNA 414A (CHANCELLOR) WITH LIGHTS

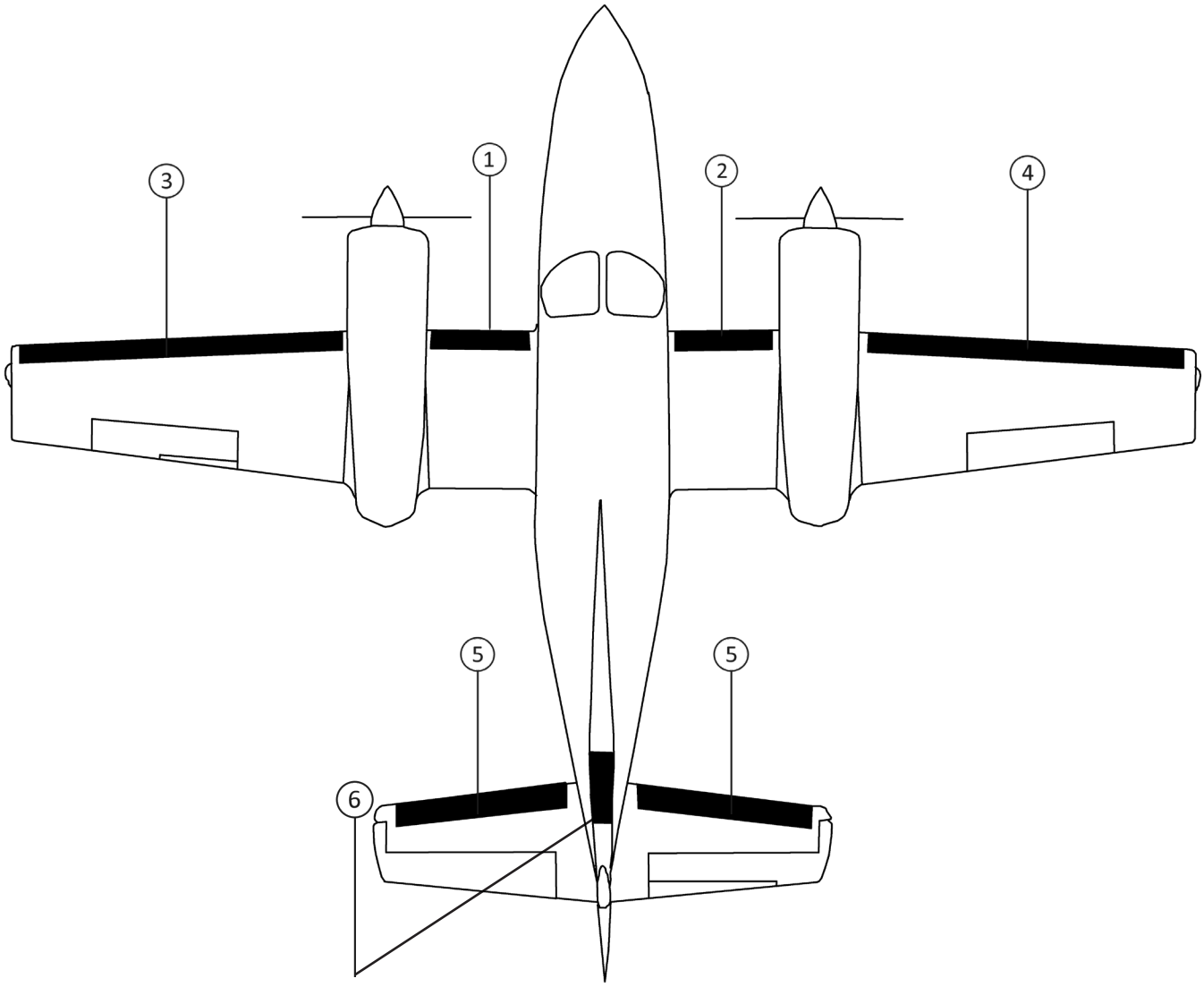

CESSNA 414A (CHANCELLOR) WITH LIGHTS

CESSNA 421 (GOLDEN EAGLE)

STANDARD DE-ICE BOOTS

POSITION ID	GOODRICH PART NUMBER	AIRCRAFT OEM P/N	DESCRIPTION	QTY PER AIRCRAFT	WT
1	29S5D2074-1-1		NACELLE-TIP LH TTS DE-ICE BOOT	1	6.0
2	29S5D2074-1-2		NACELLE-TIP RH TTS DE-ICE BOOT	1	6.0
3	29S5D2074-2-1		HORIZONTAL STABILIZER LH/RH TTS DE-ICE BOOT	2	3.7
4	29S5D2074-3-1		VERTICAL STABILIZER TTS DE-ICE BOOT	1	1.5

TYPE 29 SEWN DE-ICER PROVIDES HIGHER DURABILITY THAN TYPE 23 TUBE TYPE DESIGN

SUPERSEDED STANDARD DE-ICE BOOTS

POSITION ID	GOODRICH PART NUMBER	AIRCRAFT OEM P/N	DESCRIPTION	QTY PER AIRCRAFT	WT
1	23S-2074-1-1		NACELLE-TIP LH DE-ICE BOOT (SUPERSEDED BY P/N 29S5D2074-1-1)	1	6.0
2	23S-2074-1-2		NACELLE-TIP RH DE-ICE BOOT (SUPERSEDED BY P/N 29S5D2074-1-2)	1	6.0
3	23S-2074-2-1		HORIZONTAL STABILIZER LH/RH DE-ICE BOOT (SUPERSEDED BY P/N 29S5D2074-2-1)	2	3.7
4	23S-2074-3-1		VERTICAL STABILIZER DE-ICE BOOT (SUPERSEDED BY P/N 29S5D2074-3-1)	1	1.5

FASTboot® DE-ICE BOOTS

POSITION ID	GOODRICH PART NUMBER	AIRCRAFT OEM P/N	DESCRIPTION	QTY PER AIRCRAFT	WT
1	P29S5D2074-1-1		FASTBOOT® NACELLE-TIP LH TTS DE-ICE BOOT	1	6.0
2	P29S5D2074-1-2		FASTBOOT® NACELLE-TIP RH TTS DE-ICE BOOT	1	6.0
3	P29S5D2074-2-1		FASTBOOT® HORIZONTAL STABILIZER LH/RH TTS DE-ICE BOOT	2	3.7
4	P29S5D2074-3-1		FASTBOOT® VERTICAL STABILIZER TTS DE-ICE BOOT	1	1.5

CESSNA 421 (GOLDEN EAGLE)

CESSNA 421 (GOLDEN EAGLE)

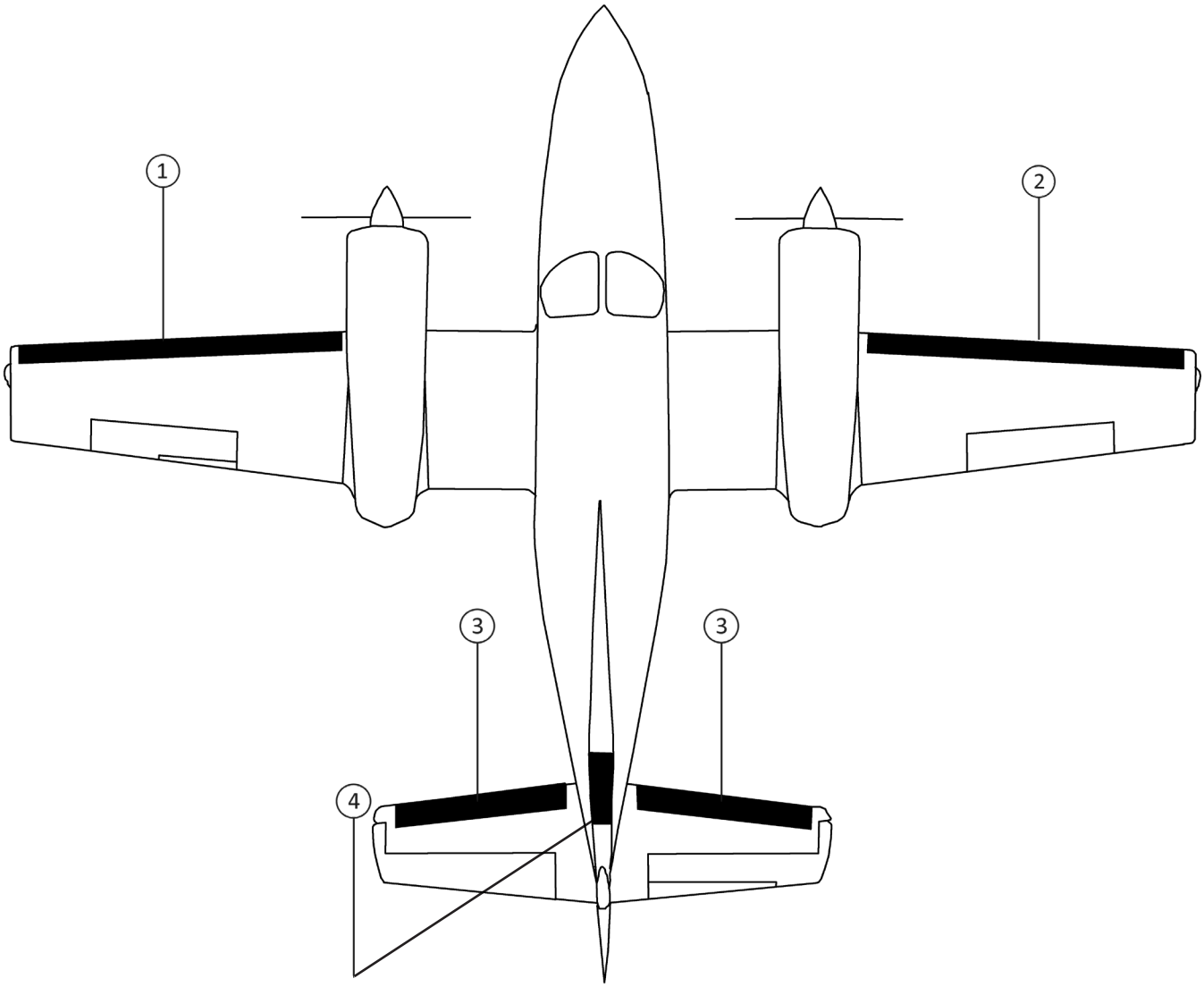

CESSNA 421A (GOLDEN EAGLE)

STANDARD DE-ICE BOOTS

POSITION ID	GOODRICH PART NUMBER	AIRCRAFT OEM P/N	DESCRIPTION	QTY PER AIRCRAFT	WT
1	29S5D2074-1-1		NACELLE-TIP LH TTS DE-ICE BOOT	1	6.0
2	29S5D2074-1-2		NACELLE-TIP RH TTS DE-ICE BOOT	1	6.0
3	29S5D2074-2-1		HORIZONTAL STABILIZER LH/RH TTS DE-ICE BOOT	2	3.7
4	29S5D2074-3-1		VERTICAL STABILIZER TTS DE-ICE BOOT	1	1.5

TYPE 29 SEWN DE-ICER PROVIDES HIGHER DURABILITY THAN TYPE 23 TUBE TYPE DESIGN

SUPERSEDED STANDARD DE-ICE BOOTS

POSITION ID	GOODRICH PART NUMBER	AIRCRAFT OEM P/N	DESCRIPTION	QTY PER AIRCRAFT	WT
1	23S-2074-1-1		NACELLE-TIP LH DE-ICE BOOT (SUPERSEDED BY P/N 29S5D2074-1-1)	1	6.0
2	23S-2074-1-2		NACELLE-TIP RH DE-ICE BOOT (SUPERSEDED BY P/N 29S5D2074-1-2)	1	6.0
3	23S-2074-2-1		HORIZONTAL STABILIZER LH/RH DE-ICE BOOT (SUPERSEDED BY P/N 29S5D2074-2-1)	2	3.7
4	23S-2074-3-1		VERTICAL STABILIZER DE-ICE BOOT (SUPERSEDED BY P/N 29S5D2074-3-1)	1	1.5

FASTboot® DE-ICE BOOTS

POSITION ID	GOODRICH PART NUMBER	AIRCRAFT OEM P/N	DESCRIPTION	QTY PER AIRCRAFT	WT
1	P29S5D2074-1-1		FASTBOOT® NACELLE-TIP LH TTS DE-ICE BOOT	1	6.0
2	P29S5D2074-1-2		FASTBOOT® NACELLE-TIP RH TTS DE-ICE BOOT	1	6.0
3	P29S5D2074-2-1		FASTBOOT® HORIZONTAL STABILIZER LH/RH TTS DE-ICE BOOT	2	3.7
4	P29S5D2074-3-1		FASTBOOT® VERTICAL STABILIZER TTS DE-ICE BOOT	1	1.5

CESSNA 421A (GOLDEN EAGLE)

CESSNA 421A (GOLDEN EAGLE)

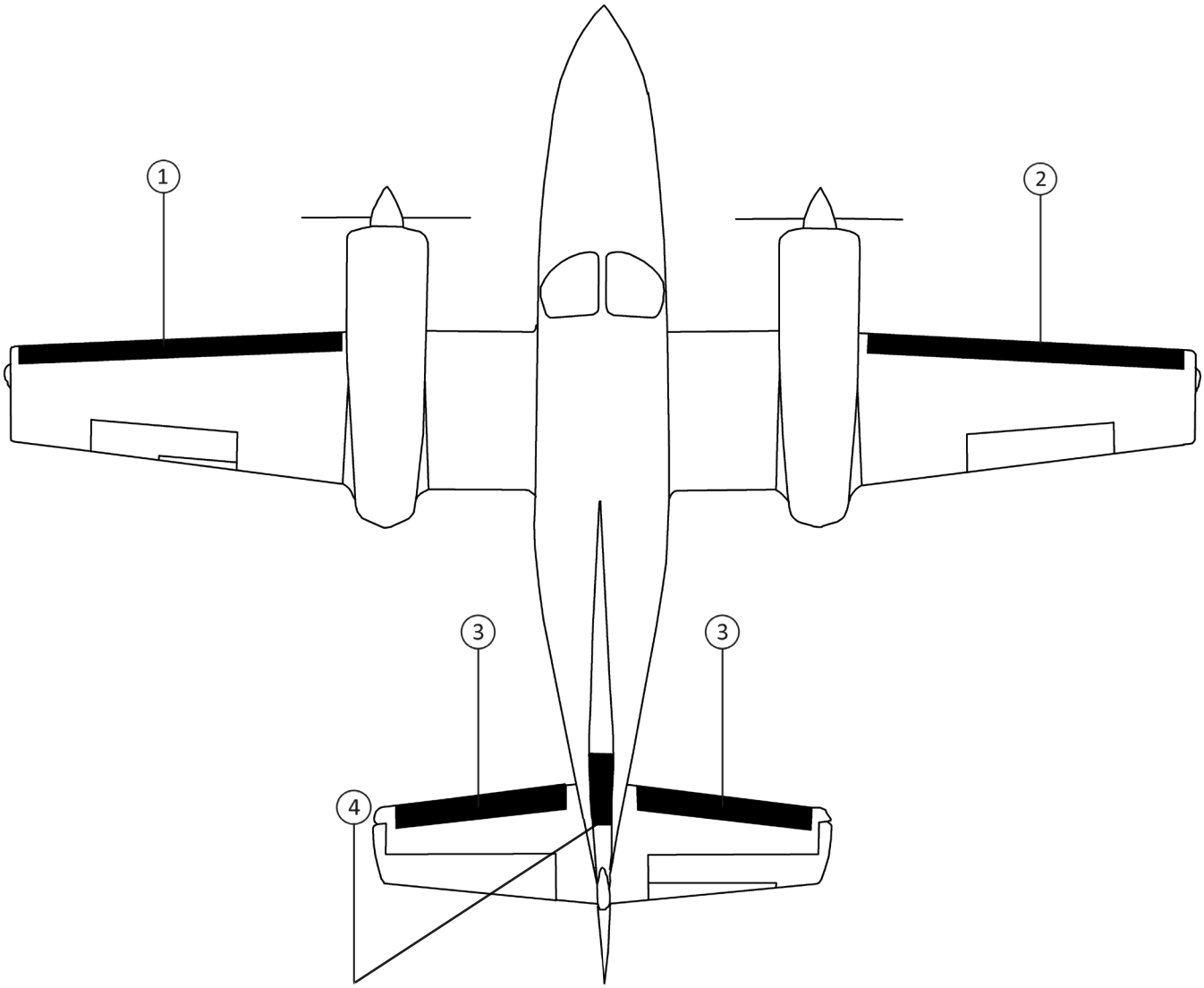

CESSNA 421B (GOLDEN EAGLE) S/N TO 421B0120

STANDARD DE-ICE BOOTS

POSITION ID	GOODRICH PART NUMBER	AIRCRAFT OEM P/N	DESCRIPTION	QTY PER AIRCRAFT	WT
1	29S5D2074-1-1		NACELLE-TIP LH TTS DE-ICE BOOT	1	6.0
2	29S5D2074-1-2		NACELLE-TIP RH TTS DE-ICE BOOT	1	6.0
3	29S5D2074-2-1		HORIZONTAL STABILIZER LH/RH TTS DE-ICE BOOT	2	3.7
4	29S5D2074-3-1		VERTICAL STABILIZER TTS DE-ICE BOOT	1	1.5

TYPE 29 SEWN DE-ICER PROVIDES HIGHER DURABILITY THAN TYPE 23 TUBE TYPE DESIGN

SUPERSEDED STANDARD DE-ICE BOOTS

POSITION ID	GOODRICH PART NUMBER	AIRCRAFT OEM P/N	DESCRIPTION	QTY PER AIRCRAFT	WT
1	23S-2074-1-1		NACELLE-TIP LH DE-ICE BOOT (SUPERSEDED BY P/N 29S5D2074-1-1)	1	6.0
2	23S-2074-1-2		NACELLE-TIP RH DE-ICE BOOT (SUPERSEDED BY P/N 29S5D2074-1-2)	1	6.0
3	23S-2074-2-1		HORIZONTAL STABILIZER LH/RH DE-ICE BOOT (SUPERSEDED BY P/N 29S5D2074-2-1)	2	3.7
4	23S-2074-3-1		VERTICAL STABILIZER DE-ICE BOOT (SUPERSEDED BY P/N 29S5D2074-3-1)	1	1.5

FASTboot® DE-ICE BOOTS

POSITION ID	GOODRICH PART NUMBER	AIRCRAFT OEM P/N	DESCRIPTION	QTY PER AIRCRAFT	WT
1	P29S5D2074-1-1		FASTBOOT® NACELLE-TIP LH TTS DE-ICE BOOT	1	6.0
2	P29S5D2074-1-2		FASTBOOT® NACELLE-TIP RH TTS DE-ICE BOOT	1	6.0
3	P29S5D2074-2-1		FASTBOOT® HORIZONTAL STABILIZER LH/RH TTS DE-ICE BOOT	2	3.7
4	P29S5D2074-3-1		FASTBOOT® VERTICAL STABILIZER TTS DE-ICE BOOT	1	1.5

CESSNA 421B (GOLDEN EAGLE) S/N TO 421B0120

CESSNA 421B (GOLDEN EAGLE) S/N TO 421B0120

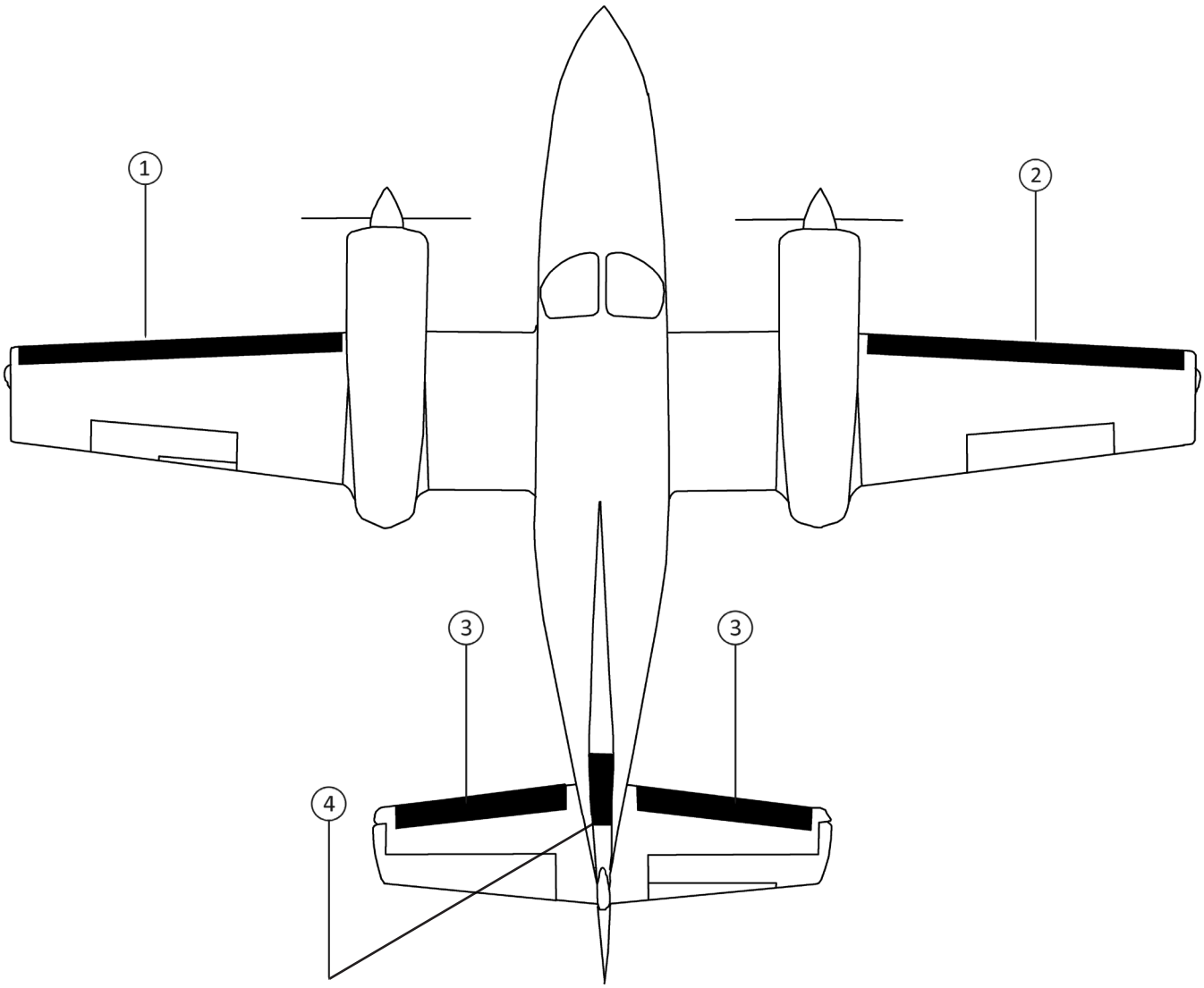

CESSNA 421B (GOLDEN EAGLE) S/N 421B0121 THRU 421B0800

STANDARD DE-ICE BOOTS

POSITION ID	GOODRICH PART NUMBER	AIRCRAFT OEM P/N	DESCRIPTION	QTY PER AIRCRAFT	WT
1	29S5D2074-4-1		FUSELAGE-NACELLE LH TTS DE-ICE BOOT	1	2.0
2	29S5D2074-4-2		FUSELAGE-NACELLE RH TTS DE-ICE BOOT	1	2.0
3	29S5D2074-1-1		NACELLE-TIP LH TTS DE-ICE BOOT	1	6.0
4	29S5D2074-1-2		NACELLE-TIP RH TTS DE-ICE BOOT	1	6.0
5	29S5D2074-2-1		HORIZONTAL STABILIZER LH/RH TTS DE-ICE BOOT	2	3.7
6	29S5D2074-3-1		VERTICAL STABILIZER TTS DE-ICE BOOT	1	1.5

TYPE 29 SEWN DE-ICER PROVIDES HIGHER DURABILITY THAN TYPE 23 TUBE TYPE DESIGN

SUPERSEDED STANDARD DE-ICE BOOTS

POSITION ID	GOODRICH PART NUMBER	AIRCRAFT OEM P/N	DESCRIPTION	QTY PER AIRCRAFT	WT
1	23S-2074-4-1		FUSELAGE-NACELLE LH DE-ICE BOOT (SUPERSEDED BY P/N 29S5D2074-4-1)	1	2.0
2	23S-2074-4-2		FUSELAGE-NACELLE RH DE-ICE BOOT (SUPERSEDED BY P/N 29S5D2074-4-2)	1	2.0
3	23S-2074-1-1		NACELLE-TIP LH DE-ICE BOOT (SUPERSEDED BY P/N 29S5D2074-1-1)	1	6.0
4	23S-2074-1-2		NACELLE-TIP RH DE-ICE BOOT (SUPERSEDED BY P/N 29S5D2074-1-2)	1	6.0
5	23S-2074-2-1		HORIZONTAL STABILIZER LH/RH DE-ICE BOOT (SUPERSEDED BY P/N 29S5D2074-2-1)	2	3.7
6	23S-2074-3-1		VERTICAL STABILIZER DE-ICE BOOT (SUPERSEDED BY P/N 29S5D2074-3-1)	1	1.5

FASTboot® DE-ICE BOOTS

POSITION ID	GOODRICH PART NUMBER	AIRCRAFT OEM P/N	DESCRIPTION	QTY PER AIRCRAFT	WT
1	P29S5D2074-4-1		FASTBOOT® FUSELAGE-NACELLE LH TTS DE-ICE BOOT	1	2.0
2	P29S5D2074-4-2		FASTBOOT® FUSELAGE-NACELLE RH TTS DE-ICE BOOT	1	2.0
3	P29S5D2074-1-1		FASTBOOT® NACELLE-TIP LH TTS DE-ICE BOOT	1	6.0
4	P29S5D2074-1-2		FASTBOOT® NACELLE-TIP RH TTS DE-ICE BOOT	1	6.0
5	P29S5D2074-2-1		FASTBOOT® HORIZONTAL STABILIZER LH/RH TTS DE-ICE BOOT	2	3.7
6	P29S5D2074-3-1		FASTBOOT® VERTICAL STABILIZER TTS DE-ICE BOOT	1	1.5

CESSNA 421B (GOLDEN EAGLE) S/N 421B0121 THRU 421B0800

CESSNA 421B (GOLDEN EAGLE) S/N 421B0121 THRU 421B0800

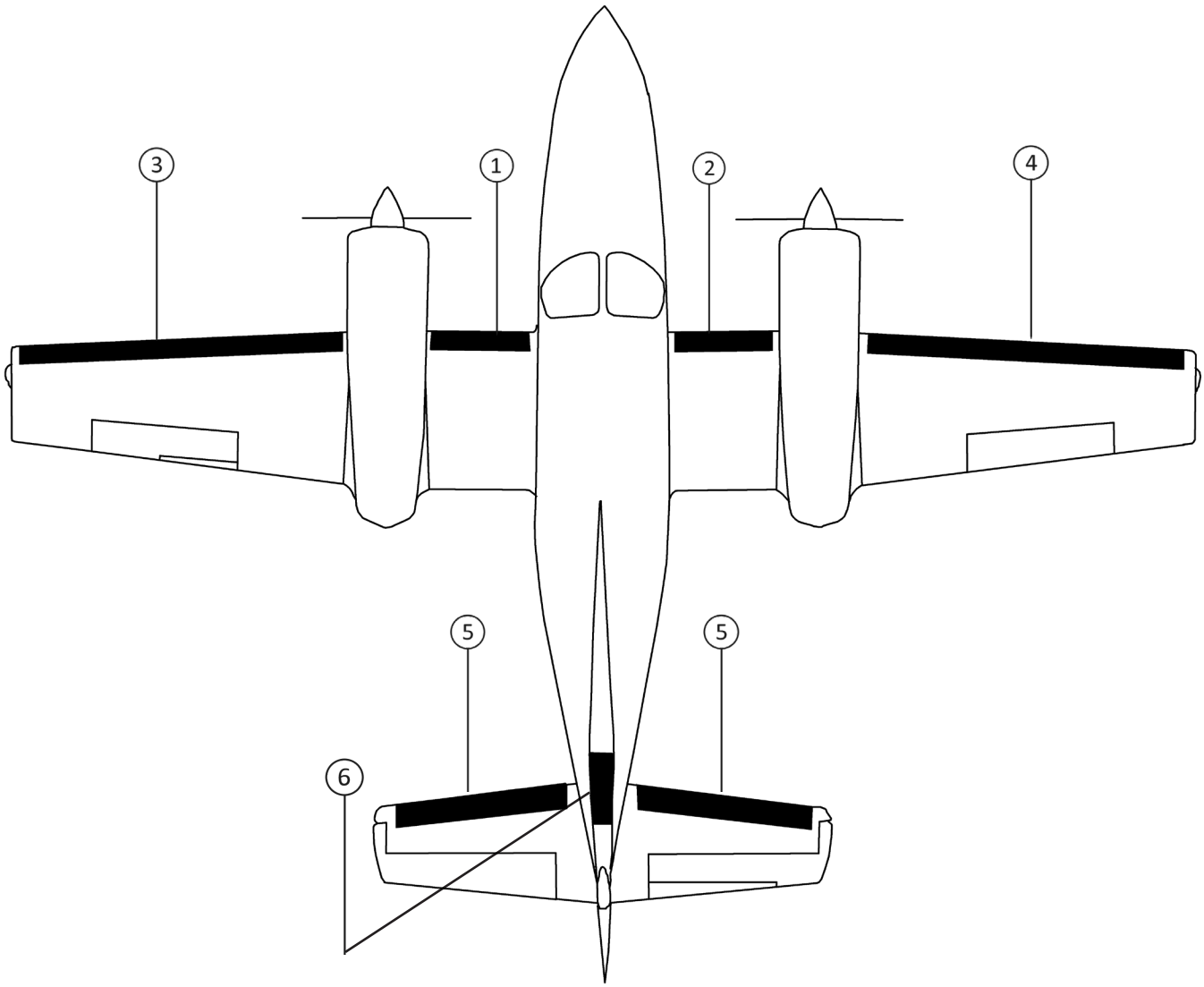

CESSNA 421B (GOLDEN EAGLE) S/N 421B0801 UP

STANDARD DE-ICE BOOTS

POSITION ID	GOODRICH PART NUMBER	AIRCRAFT OEM P/N	DESCRIPTION	QTY PER AIRCRAFT	WT
1	27S-7D5070-07		FUSELAGE-NACELLE LH DE-ICE BOOT	1	1.2
2	27S-7D5070-08		FUSELAGE-NACELLE RH DE-ICE BOOT	1	1.2
3	27S-7D5070-09		NACELLE-TIP LH DE-ICE BOOT	1	3.2
4	27S-7D5070-10		NACELLE-TIP RH DE-ICE BOOT	1	3.2
5	27S-7D5070-11		HORIZONTAL STABILIZER LH/RH DE-ICE BOOT	2	2.2
6	27S-7D5070-13		VERTICAL STABILIZER DE-ICE BOOT	1	1.2

FASTboot® DE-ICE BOOTS

POSITION ID	GOODRICH PART NUMBER	AIRCRAFT OEM P/N	DESCRIPTION	QTY PER AIRCRAFT	WT
1	P27S-7D5070-07		FASTBOOT® FUSELAGE-NACELLE LH DE-ICE BOOT	1	1.2
2	P27S-7D5070-08		FASTBOOT® FUSELAGE-NACELLE RH DE-ICE BOOT	1	1.2
3	P27S-7D5070-09		FASTBOOT® NACELLE-TIP LH DE-ICE BOOT	1	3.2
4	P27S-7D5070-10		FASTBOOT® NACELLE-TIP RH DE-ICE BOOT	1	3.2
5	P27S-7D5070-11		FASTBOOT® HORIZONTAL STABILIZER LH/RH DE-ICE BOOT	2	2.2
6	P27S-7D5070-13		FASTBOOT® VERTICAL STABILIZER DE-ICE BOOT	1	1.2

CESSNA 421B (GOLDEN EAGLE) S/N 421B0801 UP

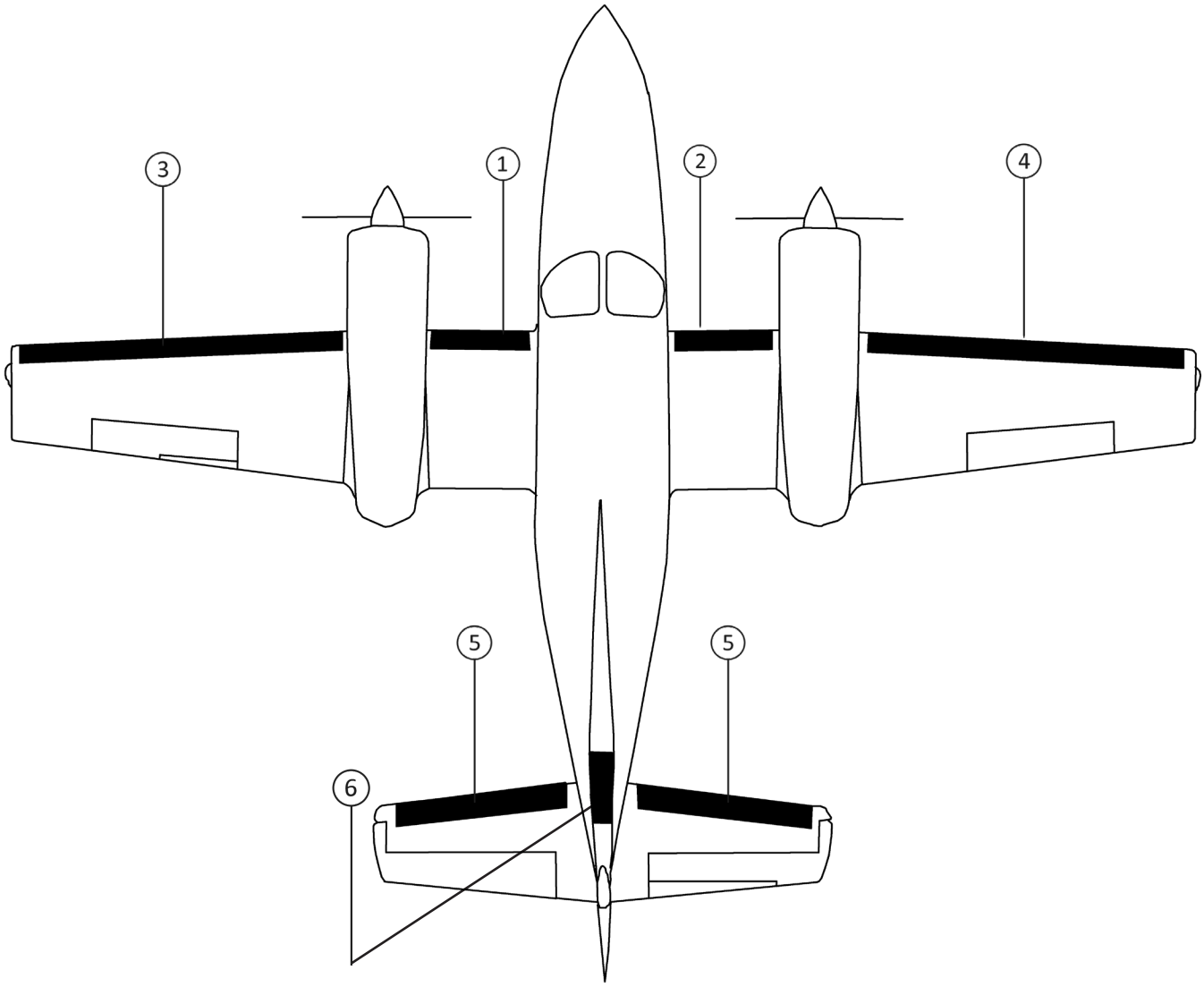

CESSNA 421B (GOLDEN EAGLE) S/N 421B0801 UP

CESSNA 421C (GOLDEN EAGLE) WITH LIGHTS

STANDARD DE-ICE BOOTS

POSITION ID	GOODRICH PART NUMBER	AIRCRAFT OEM P/N	DESCRIPTION	QTY PER AIRCRAFT	WT
1	27S-7D5070-07		FUSELAGE-NACELLE LH DE-ICE BOOT	1	1.2
2	27S-7D5070-08		FUSELAGE-NACELLE RH DE-ICE BOOT	1	1.2
3	27S-7D5070-57		NACELLE-TIP LH DE-ICE BOOT	1	5.0
4	27S-7D5070-58		NACELLE-TIP RH DE-ICE BOOT	1	5.0
5	27S-7D5070-11		HORIZONTAL STABILIZER LH/RH DE-ICE BOOT	2	2.2
6	27S-7D5070-14		VERTICAL STABILIZER DE-ICE BOOT	1	1.5

FASTboot® DE-ICE BOOTS

POSITION ID	GOODRICH PART NUMBER	AIRCRAFT OEM P/N	DESCRIPTION	QTY PER AIRCRAFT	WT
1	P27S-7D5070-07		FASTBOOT® FUSELAGE-NACELLE LH DE-ICE BOOT	1	1.2
2	P27S-7D5070-08		FASTBOOT® FUSELAGE-NACELLE RH DE-ICE BOOT	1	1.2
3	P27S-7D5070-57		FASTBOOT® NACELLE-TIP LH DE-ICE BOOT	1	5.0
4	P27S-7D5070-58		FASTBOOT® NACELLE-TIP RH DE-ICE BOOT	1	5.0
5	P27S-7D5070-11		FASTBOOT® HORIZONTAL STABILIZER LH/RH DE-ICE BOOT	2	2.2
6	P27S-7D5070-14		FASTBOOT® VERTICAL STABILIZER DE-ICE BOOT	1	1.5

CESSNA 421C (GOLDEN EAGLE) WITH LIGHTS

CESSNA 421C (GOLDEN EAGLE) WITH LIGHTS

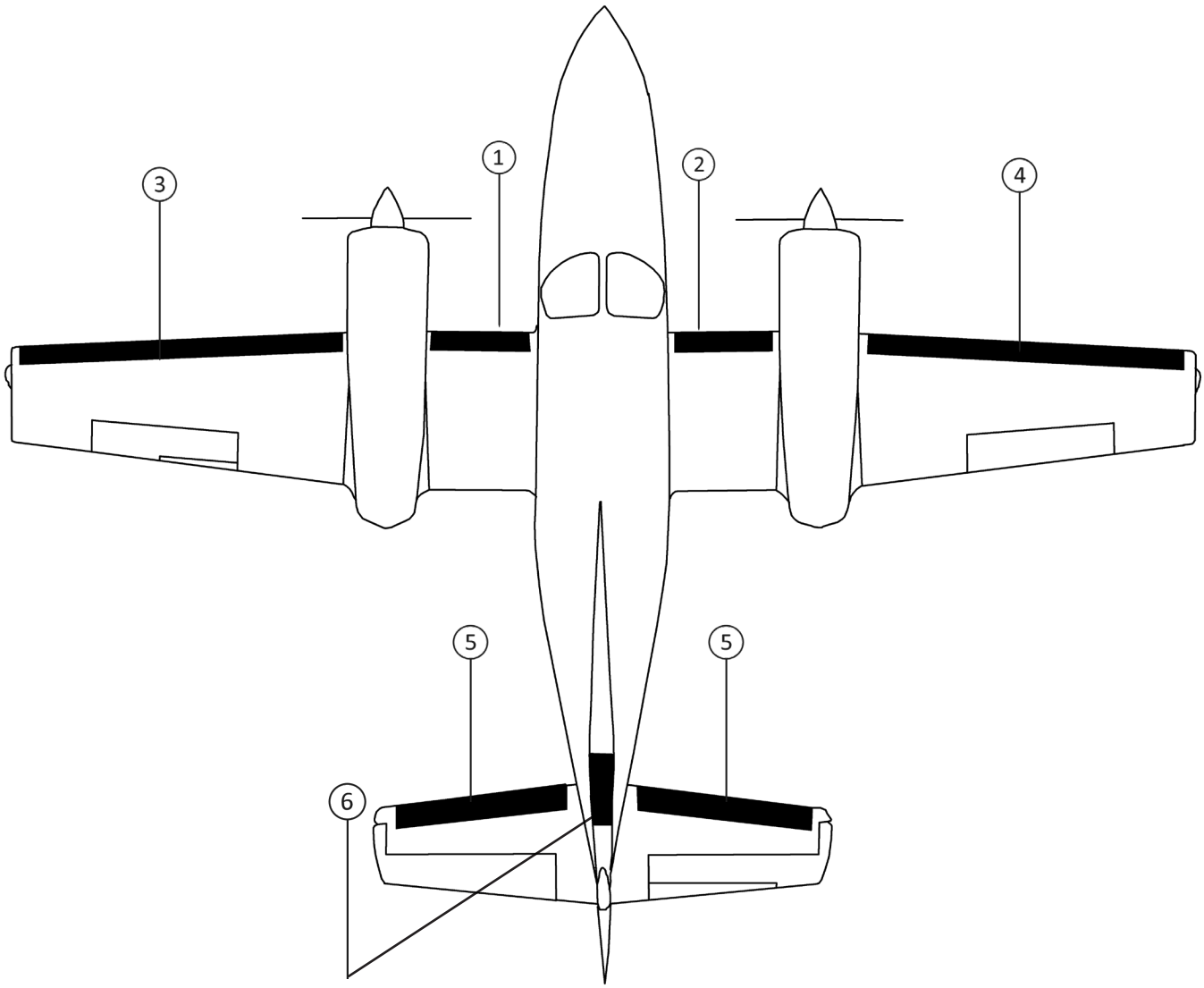

CESSNA 421C (GOLDEN EAGLE) WITHOUT LIGHTS

STANDARD DE-ICE BOOTS

POSITION ID	GOODRICH PART NUMBER	AIRCRAFT OEM P/N	DESCRIPTION	QTY PER AIRCRAFT	WT
1	27S-7D5070-07		FUSELAGE-NACELLE LH DE-ICE BOOT	1	1.2
2	27S-7D5070-08		FUSELAGE-NACELLE RH DE-ICE BOOT	1	1.2
3	27S-7D5070-15		NACELLE-TIP LH DE-ICE BOOT	1	4.0
4	27S-7D5070-16		NACELLE-TIP RH DE-ICE BOOT	1	4.0
5	27S-7D5070-11		HORIZONTAL STABILIZER LH/RH DE-ICE BOOT	2	2.2
6	27S-7D5070-14		VERTICAL STABILIZER DE-ICE BOOT	1	1.5

FASTboot® DE-ICE BOOTS

POSITION ID	GOODRICH PART NUMBER	AIRCRAFT OEM P/N	DESCRIPTION	QTY PER AIRCRAFT	WT
1	P27S-7D5070-07		FASTBOOT® FUSELAGE-NACELLE LH DE-ICE BOOT	1	1.2
2	P27S-7D5070-08		FASTBOOT® FUSELAGE-NACELLE RH DE-ICE BOOT	1	1.2
3	P27S-7D5070-15		FASTBOOT® NACELLE-TIP LH DE-ICE BOOT	1	4.0
4	P27S-7D5070-16		FASTBOOT® NACELLE-TIP RH DE-ICE BOOT	1	4.0
5	P27S-7D5070-11		FASTBOOT® HORIZONTAL STABILIZER LH/RH DE-ICE BOOT	2	2.2
6	P27S-7D5070-14		FASTBOOT® VERTICAL STABILIZER DE-ICE BOOT	1	1.5

CESSNA 421C (GOLDEN EAGLE) WITHOUT LIGHTS

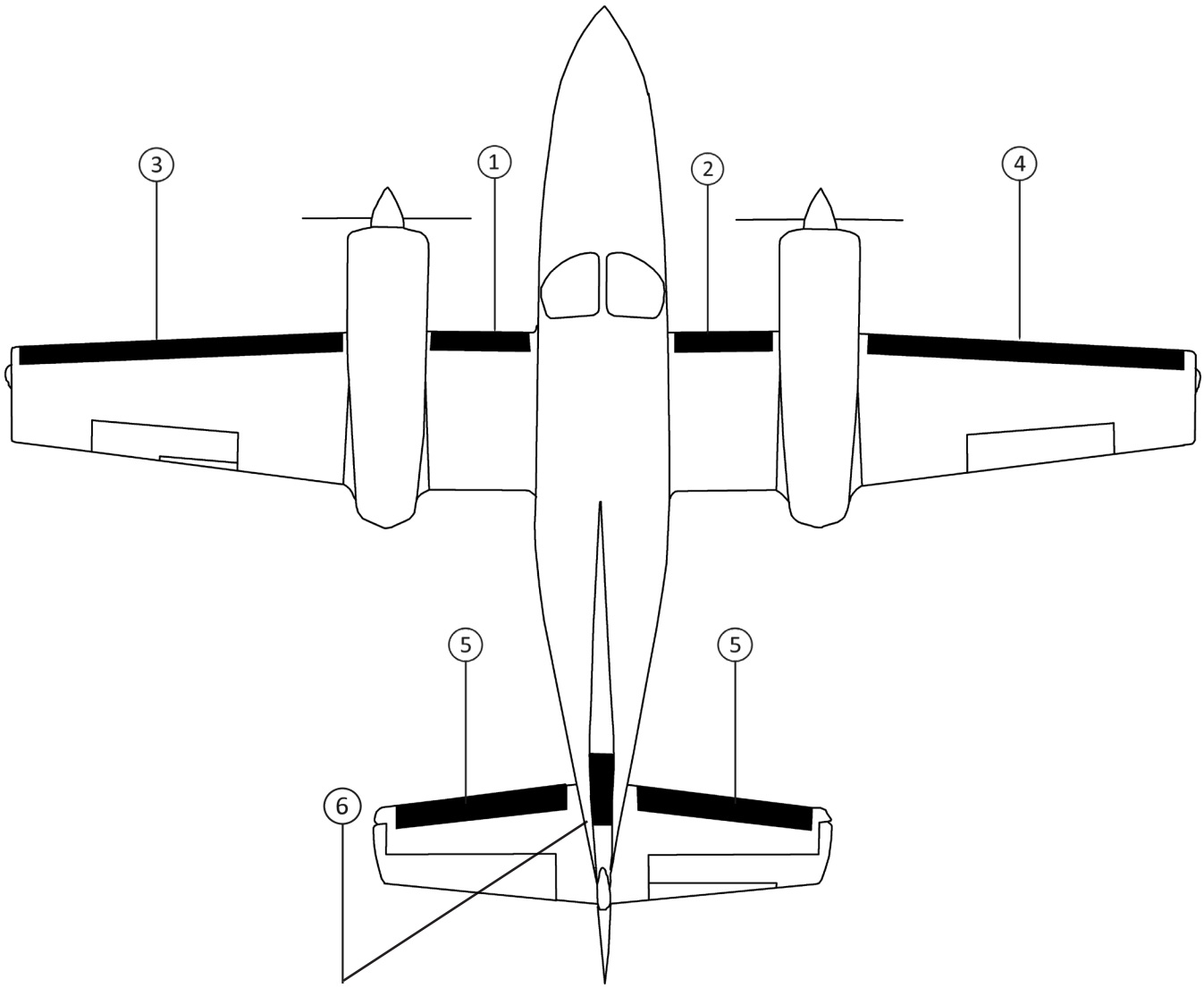

CESSNA 425 (CONQUEST I) S/N TO 425-0190

CESSNA 425 (CONQUEST I) S/N TO 425-0190

STANDARD DE-ICE BOOTS

POSITION ID	GOODRICH PART NUMBER	AIRCRAFT OEM P/N	DESCRIPTION	QTY PER AIRCRAFT	WT
1	27S-7D5070-53		FUSELAGE-NACELLE LH DE-ICE BOOT	1	1.5
2	27S-7D5070-54		FUSELAGE-NACELLE RH DE-ICE BOOT	1	1.5
3	27S-7D5070-49		NACELLE-TIP LH DE-ICE BOOT	1	5.4
4	27S-7D5070-50		NACELLE-TIP RH DE-ICE BOOT	1	5.4
5	27S-7D5070-21	9910277-5	HORIZONTAL STABILIZER LH/RH DE-ICE BOOT	2	2.6
6	27S-7D5070-14		VERTICAL STABILIZER DE-ICE BOOT	1	1.5

FASTboot® DE-ICE BOOTS

POSITION ID	GOODRICH PART NUMBER	AIRCRAFT OEM P/N	DESCRIPTION	QTY PER AIRCRAFT	WT
1	P27S-7D5070-53		FASTBOOT® FUSELAGE-NACELLE LH DE-ICE BOOT	1	1.5
2	P27S-7D5070-54		FASTBOOT® FUSELAGE-NACELLE RH DE-ICE BOOT	1	1.5
3	P27S-7D5070-49		FASTBOOT® NACELLE-TIP LH DE-ICE BOOT	1	5.4
4	P27S-7D5070-50		FASTBOOT® NACELLE-TIP RH DE-ICE BOOT	1	5.4
5	P27S-7D5070-21	9910277-5	FASTBOOT® HORIZONTAL STABILIZER LH/RH DE-ICE BOOT	2	2.6
6	P27S-7D5070-14		FASTBOOT® VERTICAL STABILIZER DE-ICE BOOT	1	1.5

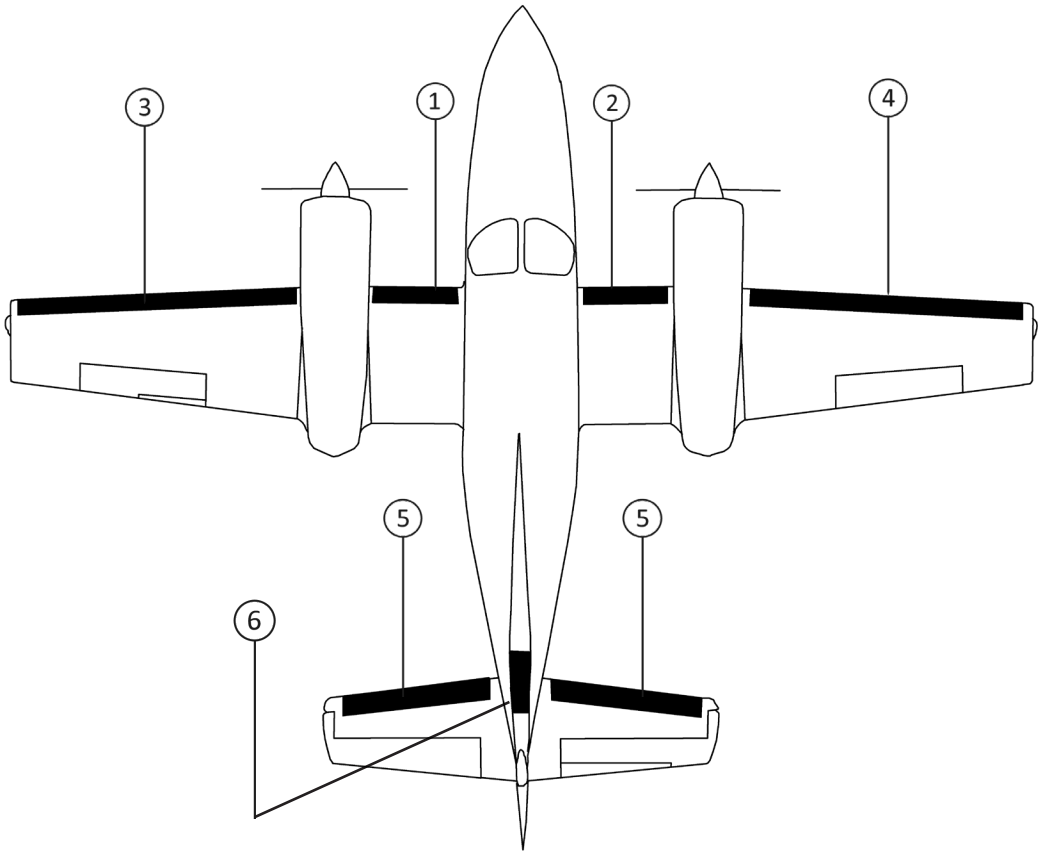

CESSNA 425 (CONQUEST I) S/N 425-0191 UP

STANDARD DE-ICE BOOTS

POSITION ID	GOODRICH PART NUMBER	AIRCRAFT OEM P/N	DESCRIPTION	QTY PER AIRCRAFT	WT
1	27S-7D5070-53		FUSELAGE-NACELLE LH DE-ICE BOOT	1	1.5
2	27S-7D5070-54		FUSELAGE-NACELLE RH DE-ICE BOOT	1	1.5
3	27S-7D5070-55		NACELLE-TIP LH DE-ICE BOOT	1	5.4
4	27S-7D5070-56		NACELLE-TIP RH DE-ICE BOOT	1	5.4
5	27S-7D5070-21	9910277-5	HORIZONTAL STABILIZER LH/RH DE-ICE BOOT	2	2.6
6	27S-7D5070-14		VERTICAL STABILIZER DE-ICE BOOT	1	1.5

FASTboot® DE-ICE BOOTS

POSITION ID	GOODRICH PART NUMBER	AIRCRAFT OEM P/N	DESCRIPTION	QTY PER AIRCRAFT	WT
1	P27S-7D5070-53		FASTBOOT® FUSELAGE-NACELLE LH DE-ICE BOOT	1	1.5
2	P27S-7D5070-54		FASTBOOT® FUSELAGE-NACELLE RH DE-ICE BOOT	1	1.5
3	P27S-7D5070-55		FASTBOOT® NACELLE-TIP LH DE-ICE BOOT	1	5.0
4	P27S-7D5070-56		FASTBOOT® NACELLE-TIP RH DE-ICE BOOT	1	5.0
5	P27S-7D5070-21	9910277-5	FASTBOOT® HORIZONTAL STABILIZER LH/RH DE-ICE BOOT	2	2.6
6	P27S-7D5070-14		FASTBOOT® VERTICAL STABILIZER DE-ICE BOOT	1	1.5

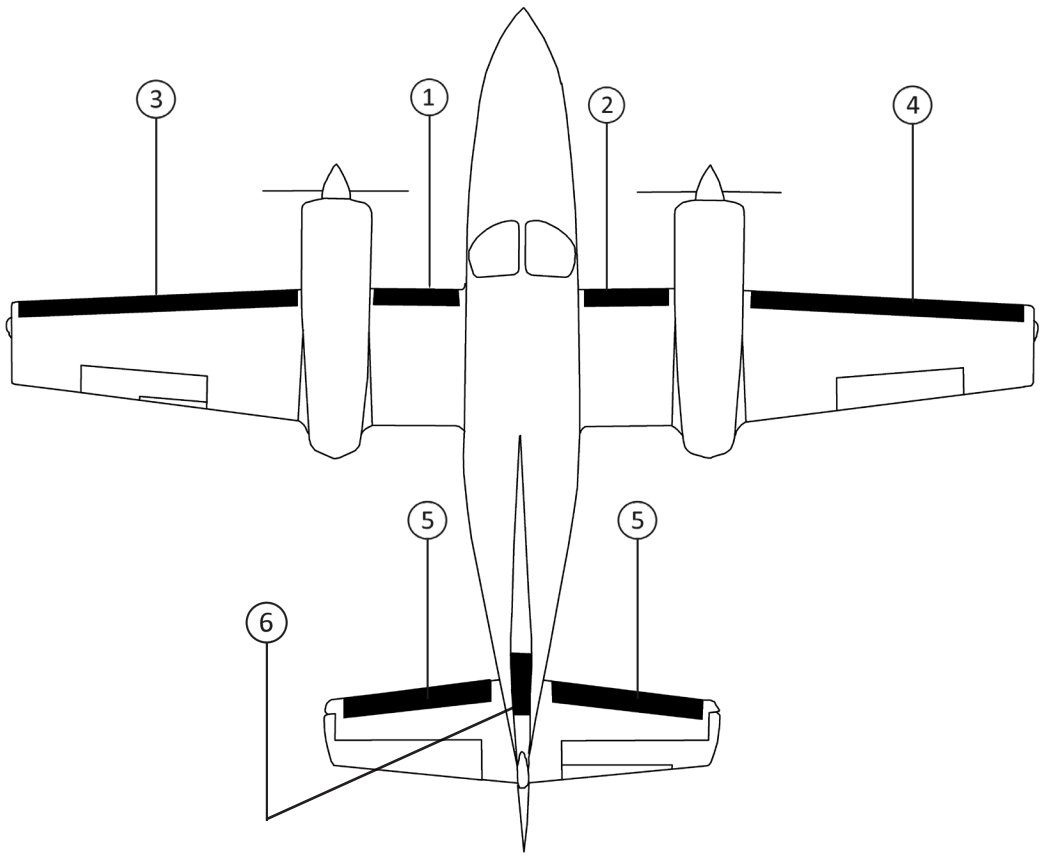

CESSNA 441 (CONQUEST II) TO S/N 441-0102

STANDARD DE-ICE BOOTS

POSITION ID	GOODRICH PART NUMBER	AIRCRAFT OEM P/N	DESCRIPTION	QTY PER AIRCRAFT	WT
1	27S-7D5109-01		FUSELAGE-NACELLE LH DE-ICE BOOT	1	1.9
2	27S-7D5109-02		FUSELAGE-NACELLE RH DE-ICE BOOT	1	1.9
3	28S-7D5109-05		FUSELAGE-NACELLE EXTENSION LH/RH DE-ICE BOOT	2	0.2
4	27S-7D5109-03		NACELLE-TIP LH DE-ICE BOOT	1	6.8
5	27S-7D5109-04		NACELLE-TIP RH DE-ICE BOOT	1	6.8
6	27S-7D5070-21	9910277-5	HORIZONTAL STABILIZER LH/RH DE-ICE BOOT	2	2.6
7	27S-7D5070-23	9910277-14	VERTICAL STABILIZER DE-ICE BOOT	1	1.6

FASTboot® DE-ICE BOOTS

POSITION ID	GOODRICH PART NUMBER	AIRCRAFT OEM P/N	DESCRIPTION	QTY PER AIRCRAFT	WT
1	P27S-7D5109-01		FASTBOOT® FUSELAGE-NACELLE LH DE-ICE BOOT	1	1.9
2	P27S-7D5109-02		FASTBOOT® FUSELAGE-NACELLE RH DE-ICE BOOT	1	1.9
3	P28S-7D5109-05		FASTBOOT® FUSELAGE-NACELLE EXTENSION LH/RH DE-ICE BOOT	2	0.2
4	P27S-7D5109-03		FASTBOOT® NACELLE-TIP LH DE-ICE BOOT	1	6.8
5	P27S-7D5109-04		FASTBOOT® NACELLE-TIP RH DE-ICE BOOT	1	6.8
6	P27S-7D5070-21	9910277-5	FASTBOOT® HORIZONTAL STABILIZER LH/RH DE-ICE BOOT	2	2.6
7	P27S-7D5070-23	9910277-14	FASTBOOT® VERTICAL STABILIZER DE-ICE BOOT	1	1.6

CESSNA 441 (CONQUEST II) TO S/N 441-0102

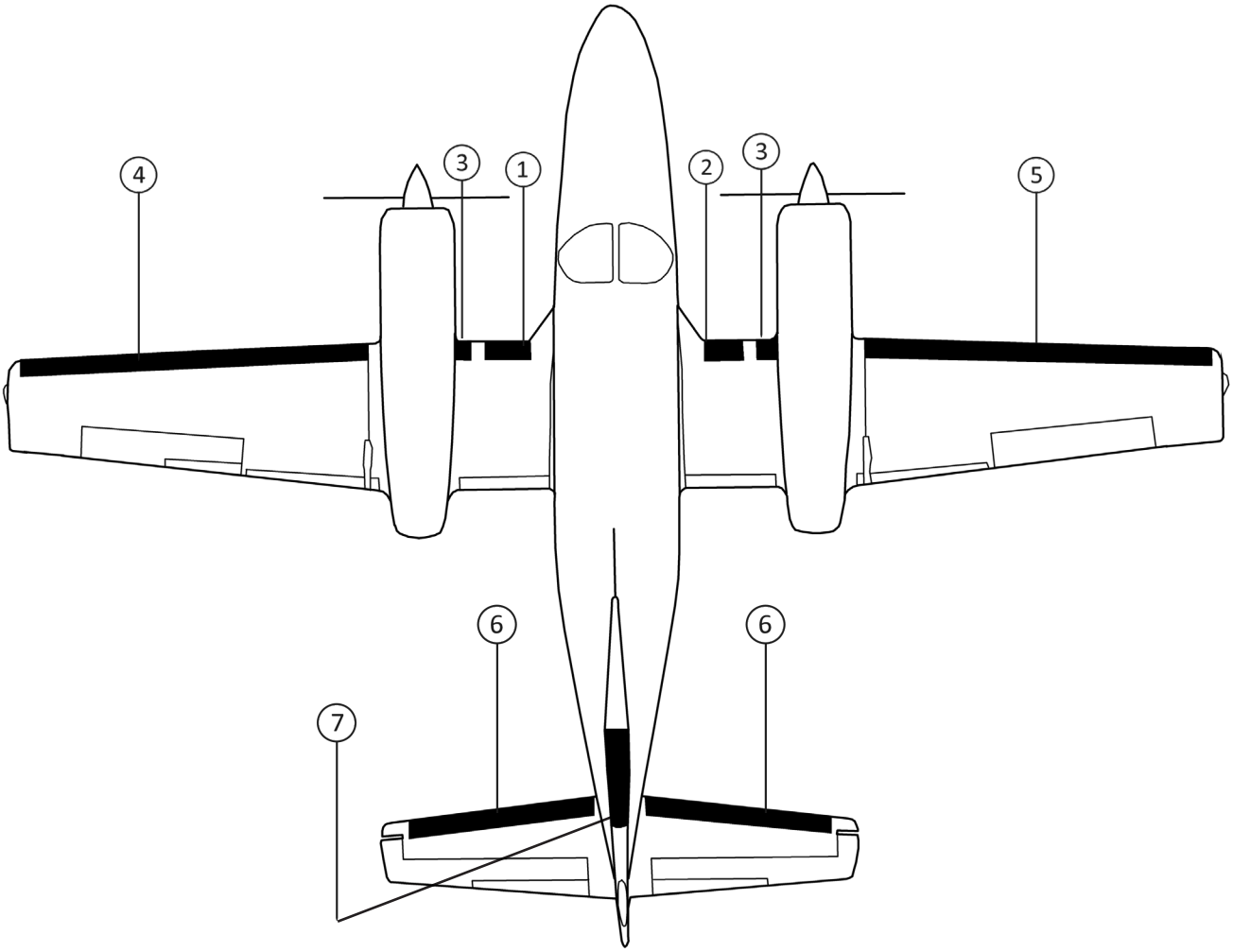

CESSNA 441 (CONQUEST II) TO S/N 441-0102

CESSNA 441 (CONQUEST II) S/N 441-0103 UP

STANDARD DE-ICE BOOTS

POSITION ID	GOODRICH PART NUMBER	AIRCRAFT OEM P/N	DESCRIPTION	QTY PER AIRCRAFT	WT
1	27S-7D5109-01		FUSELAGE-NACELLE LH DE-ICE BOOT	1	1.9
2	27S-7D5109-02		FUSELAGE-NACELLE RH DE-ICE BOOT	1	1.9
3	28S-7D5109-05		FUSELAGE-NACELLE EXTENSION LH/RH DE-ICE BOOT	2	0.2
4	27S-7D5109-07		NACELLE-TIP LH DE-ICE BOOT	1	6.5
5	27S-7D5109-08		NACELLE-TIP RH DE-ICE BOOT	1	6.5
6	27S-7D5070-21	9910277-5	HORIZONTAL STABILIZER LH/RH DE-ICE BOOT	2	2.6
7	27S-7D5070-23	9910277-14	VERTICAL STABILILIZER DE-ICE BOOT	1	1.6

FASTboot® DE-ICE BOOTS

POSITION ID	GOODRICH PART NUMBER	AIRCRAFT OEM P/N	DESCRIPTION	QTY PER AIRCRAFT	WT
1	P27S-7D5109-01		FASTBOOT® FUSELAGE-NACELLE LH DE-ICE BOOT	1	1.9
2	P27S-7D5109-02		FASTBOOT® FUSELAGE-NACELLE RH DE-ICE BOOT	1	1.9
3	P28S-7D5109-05		FASTBOOT® FUSELAGE-NACELLE EXTENSION LH/RH DE-ICE BOOT	2	0.2
4	P27S-7D5109-07		FASTBOOT® NACELLE-TIP LH DE-ICE BOOT	1	6.5
5	P27S-7D5109-08		FASTBOOT® NACELLE-TIP RH DE-ICE BOOT	1	6.5
6	P27S-7D5070-21	9910277-5	FASTBOOT® HORIZONTAL STABILIZER LH/RH DE-ICE BOOT	2	2.6
7	P27S-7D5070-23	9910277-14	FASTBOOT® VERTICAL STABILIZER DE-ICE BOOT	1	1.6

CESSNA 441 (CONQUEST II) S/N 441-0103 UP

CESSNA 441 (CONQUEST II) S/N 441-0103 UP

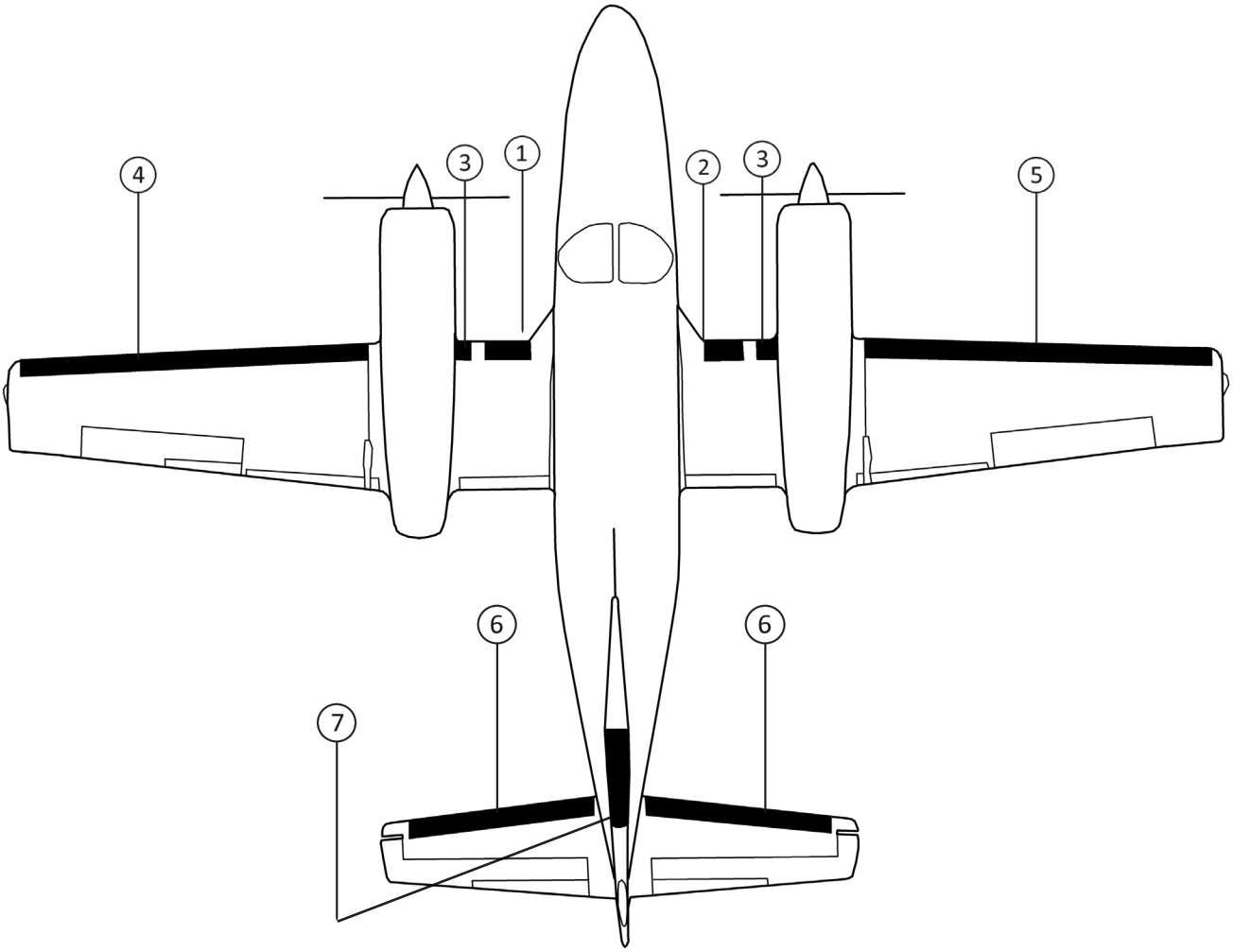

CESSNA 500 (CITATION I) TO S/N 500-0349

STANDARD DE-ICE BOOTS

POSITION ID	GOODRICH PART NUMBER	AIRCRAFT OEM P/N	DESCRIPTION	QTY PER AIRCRAFT	WT
1	25S-7D5059-01		WING LH DE-ICE BOOT	1	5.4
2	25S-7D5059-02		WING RH DE-ICE BOOT	1	5.4
3	25S-7D5059-03*		HORIZONTAL STABILIZER LH/RH DE-ICE BOOT	2	2.6
4	25S-7D5059-05		VERTICAL STABILIZER DE-ICE BOOT	1	1.8

OPTIONAL STANDARD DE-ICE BOOTS

POSITION ID	GOODRICH PART NUMBER	AIRCRAFT OEM P/N	DESCRIPTION	QTY PER AIRCRAFT	WT
3	29S-7D5059-13		HORIZONTAL STABILIZER LH/RH DE-ICE BOOT	2	3.3

*PART NUMBERS (P)25S-7D5059-03 AND (P)29S-7D5059-13 ARE INTERCHANGEABLE. 29S-7D5059-13 IS MORE ROBUST, BUT ALSO HEAVIER

FASTboot® DE-ICE BOOTS

POSITION ID	GOODRICH PART NUMBER	AIRCRAFT OEM P/N	DESCRIPTION	QTY PER AIRCRAFT	WT
1	P25S-7D5059-01		FASTBOOT® WING LH DE-ICE BOOT	1	5.4
2	P25S-7D5059-02		FASTBOOT® WING RH DE-ICE BOOT	1	5.4
3	P25S-7D5059-03*		FASTBOOT® HORIZONTAL STABILIZER LH/RH DE-ICE BOOT	2	2.6
4	P25S-7D5059-05		FASTBOOT® VERTICAL STABILIZER DE-ICE BOOT	1	1.8

OPTIONAL FASTboot® DE-ICE BOOTS

POSITION ID	GOODRICH PART NUMBER	AIRCRAFT OEM P/N	DESCRIPTION	QTY PER AIRCRAFT	WT
3	P29S-7D5059-13*		FASTBOOT® HORIZONTAL STABILIZER LH/RH DE-ICE BOOT	2	3.3

EAGLE MOD STC SA645NW

STANDARD DE-ICE BOOTS

POSITION ID	GOODRICH PART NUMBER	AIRCRAFT OEM P/N	DESCRIPTION	QTY PER AIRCRAFT	WT
1	25S-7D5059-11		WING LH DE-ICE BOOT	1	5.4
2	25S-7D5059-12		WING RH DE-ICE BOOT	1	5.4

FASTboot® DE-ICE BOOTS

POSITION ID	GOODRICH PART NUMBER	AIRCRAFT OEM P/N	DESCRIPTION	QTY PER AIRCRAFT	WT
1	P25S-7D5059-11		FASTBOOT® WING LH DE-ICE BOOT	1	5.4
2	P25S-7D5059-12		FASTBOOT® WING RH DE-ICE BOOT	1	5.4

CESSNA 500 (CITATION I) TO S/N 500-0349

CESSNA 500 (CITATION I) TO S/N 500-0349

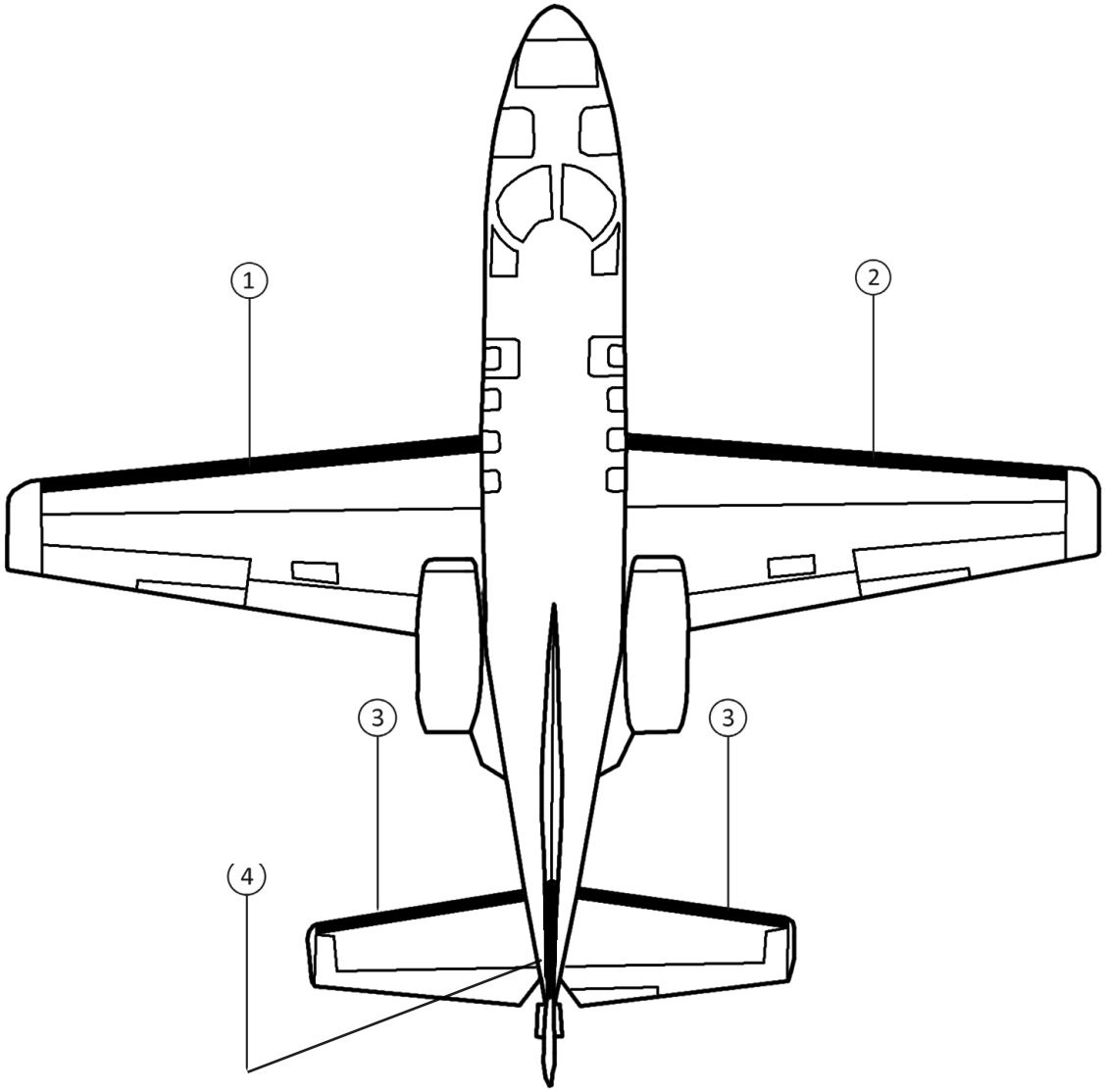

CESSNA 500 (CITATION I) S/N 500-0350 & UP

STANDARD DE-ICE BOOTS

POSITION ID	GOODRICH PART NUMBER	AIRCRAFT OEM P/N	DESCRIPTION	QTY PER AIRCRAFT	WT
1	25S-7D5059-07		WING LH DE-ICE BOOT	1	5.9
2	25S-7D5059-08		WING RH DE-ICE BOOT	1	5.9
3	25S-7D5059-03*		HORIZONTAL STABILIZER LH/RH DE-ICE BOOT	2	2.6
4	25S-7D5059-05		VERTICAL STABILIZER DE-ICE BOOT	1	1.8

OPTIONAL STANDARD DE-ICE BOOTS

POSITION ID	GOODRICH PART NUMBER	AIRCRAFT OEM P/N	DESCRIPTION	QTY PER AIRCRAFT	WT
3	29S-7D5059-13*		HORIZONTAL STABILIZER LH/RH DE-ICE BOOT	2	3.3

*PART NUMBERS (P)25S-7D5059-03 AND (P)29S-7D5059-13 ARE INTERCHANGEABLE. 29S-7D5059-13 IS MORE ROBUST, BUT ALSO HEAVIER

FASTboot® DE-ICE BOOTS

POSITION ID	GOODRICH PART NUMBER	AIRCRAFT OEM P/N	DESCRIPTION	QTY PER AIRCRAFT	WT
1	P25S-7D5059-07		FASTBOOT® WING LH DE-ICE BOOT	1	5.9
2	P25S-7D5059-08		FASTBOOT® WING RH DE-ICE BOOT	1	5.9
3	P25S-7D5059-03*		FASTBOOT® HORIZONTAL STABILIZER LH/RH DE-ICE BOOT	2	2.6
4	P25S-7D5059-05		FASTBOOT® VERTICAL STABILIZER DE-ICE BOOT	1	1.8

OPTIONAL FASTboot® DE-ICE BOOTS

POSITION ID	GOODRICH PART NUMBER	AIRCRAFT OEM P/N	DESCRIPTION	QTY PER AIRCRAFT	WT
3	P29S-7D5059-13*		FASTBOOT® HORIZONTAL STABILIZER LH/RH DE-ICE BOOT	2	3.3

EAGLE MOD STC SA645NW

STANDARD DE-ICE BOOTS

POSITION ID	GOODRICH PART NUMBER	AIRCRAFT OEM P/N	DESCRIPTION	QTY PER AIRCRAFT	WT
1	25S-7D5059-11		WING LH DE-ICE BOOT	1	5.4
2	25S-7D5059-12		WING RH DE-ICE BOOT	1	5.4

FASTboot® DE-ICE BOOTS

POSITION ID	GOODRICH PART NUMBER	AIRCRAFT OEM P/N	DESCRIPTION	QTY PER AIRCRAFT	WT
1	P25S-7D5059-11		FASTBOOT® WING LH DE-ICE BOOT	1	5.4
2	P25S-7D5059-12		FASTBOOT® WING RH DE-ICE BOOT	1	5.4

CESSNA 500 (CITATION I) S/N 500-0350 & UP

CESSNA 500 (CITATION I) S/N 500-0350 & UP

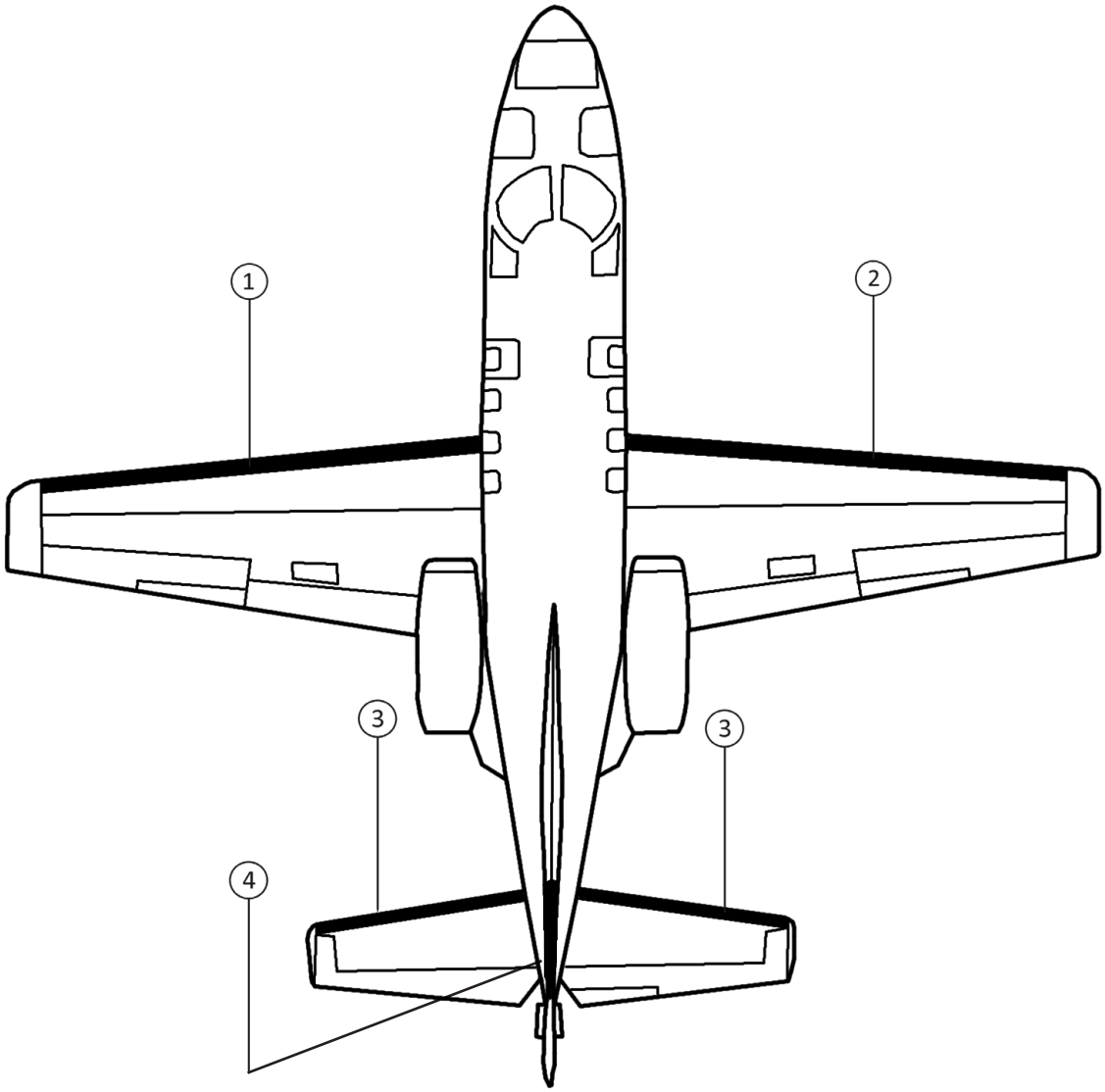

CESSNA 501 (CITATION 1/SP)

STANDARD DE-ICE BOOTS

POSITION ID	GOODRICH PART NUMBER	AIRCRAFT OEM P/N	DESCRIPTION	QTY PER AIRCRAFT	WT
1	25S-7D5059-07		WING LH DE-ICE BOOT	1	5.9
2	25S-7D5059-08		WING RH DE-ICE BOOT	1	5.9
3	25S-7D5059-03*		HORIZONTAL STABILIZER LH/RH DE-ICE BOOT	2	2.6
4	25S-7D5059-05		VERTICAL STABILIZER DE-ICE BOOT	1	1.8

OPTIONAL STANDARD DE-ICE BOOTS

POSITION ID	GOODRICH PART NUMBER	AIRCRAFT OEM P/N	DESCRIPTION	QTY PER AIRCRAFT	WT
3	29S-7D5059-13*		HORIZONTAL STABILIZER LH/RH DE-ICE BOOT	2	3.3

*PART NUMBERS (P)25S-7D5059-03 AND (P)29S-7D5059-13 ARE INTERCHANGEABLE. 29S-7D5059-13 IS MORE ROBUST, BUT ALSO HEAVIER

FASTboot® DE-ICE BOOTS

POSITION ID	GOODRICH PART NUMBER	AIRCRAFT OEM P/N	DESCRIPTION	QTY PER AIRCRAFT	WT
1	P25S-7D5059-07		FASTBOOT® WING LH DE-ICE BOOT	1	5.9
2	P25S-7D5059-08		FASTBOOT® WING RH DE-ICE BOOT	1	5.9
3	P25S-7D5059-03*		FASTBOOT® HORIZONTAL STABILIZER LH/RH DE-ICE BOOT	2	2.6
4	P25S-7D5059-05		FASTBOOT® VERTICAL STABILIZER DE-ICE BOOT	1	1.8

OPTIONAL FASTboot® DE-ICE BOOTS

POSITION ID	GOODRICH PART NUMBER	AIRCRAFT OEM P/N	DESCRIPTION	QTY PER AIRCRAFT	WT
3	P29S-7D5059-13*		FASTBOOT® HORIZONTAL STABILIZER LH/RH DE-ICE BOOT	2	3.3

CESSNA 501 (CITATION 1/SP)

CESSNA 501 (CITATION 1/SP)

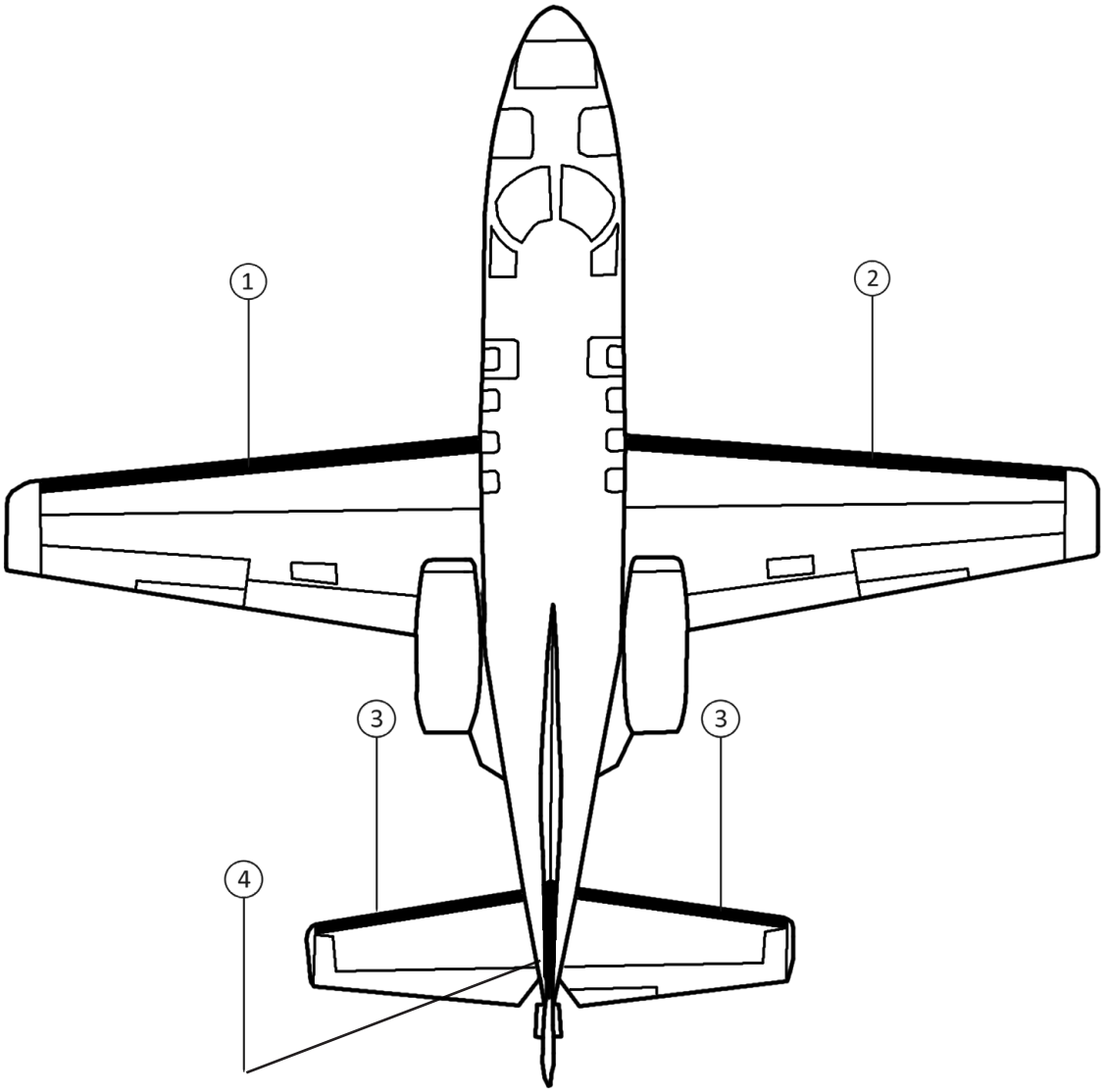

CESSNA 510 (MUSTANG)

FASTboot® DE-ICE BOOTS

POSITION ID	GOODRICH PART NUMBER	AIRCRAFT OEM P/N	DESCRIPTION	QTY PER AIRCRAFT	WT
1	P35-4D5317-17	9912662-17	FASTBOOT® WING LH (ESTANE®) DE-ICE BOOT	1	10.1
2	P35-4D5317-18	9912662-18	FASTBOOT® WING RH (ESTANE®)DE-ICE BOOT	1	10.1
3	P29S4D5317-05	9912662-3	FASTBOOT® HORIZONTAL STABILIZER LH (ESTANE®) DE-ICE BOOT	1	4.6
4	P29S4D5317-06	9912662-4	FASTBOOT® HORIZONTAL STABILIZER RH (ESTANE®) DE-ICE BOOT	1	4.6
5	P29S4D5317-13	9912662-13	FASTBOOT® VERTICAL STABILIZER (ESTANE®) DE-ICE BOOT	1	4.5

CONTACT TEXTRON (CESSNA) TO PURCHASE OEM GOODRICH DE-ICE BOOTS

ESTANE® DE-ICERS HAVE A SURFACE PLY RESISTANT TO DIESTER TYPE ENGINE OIL

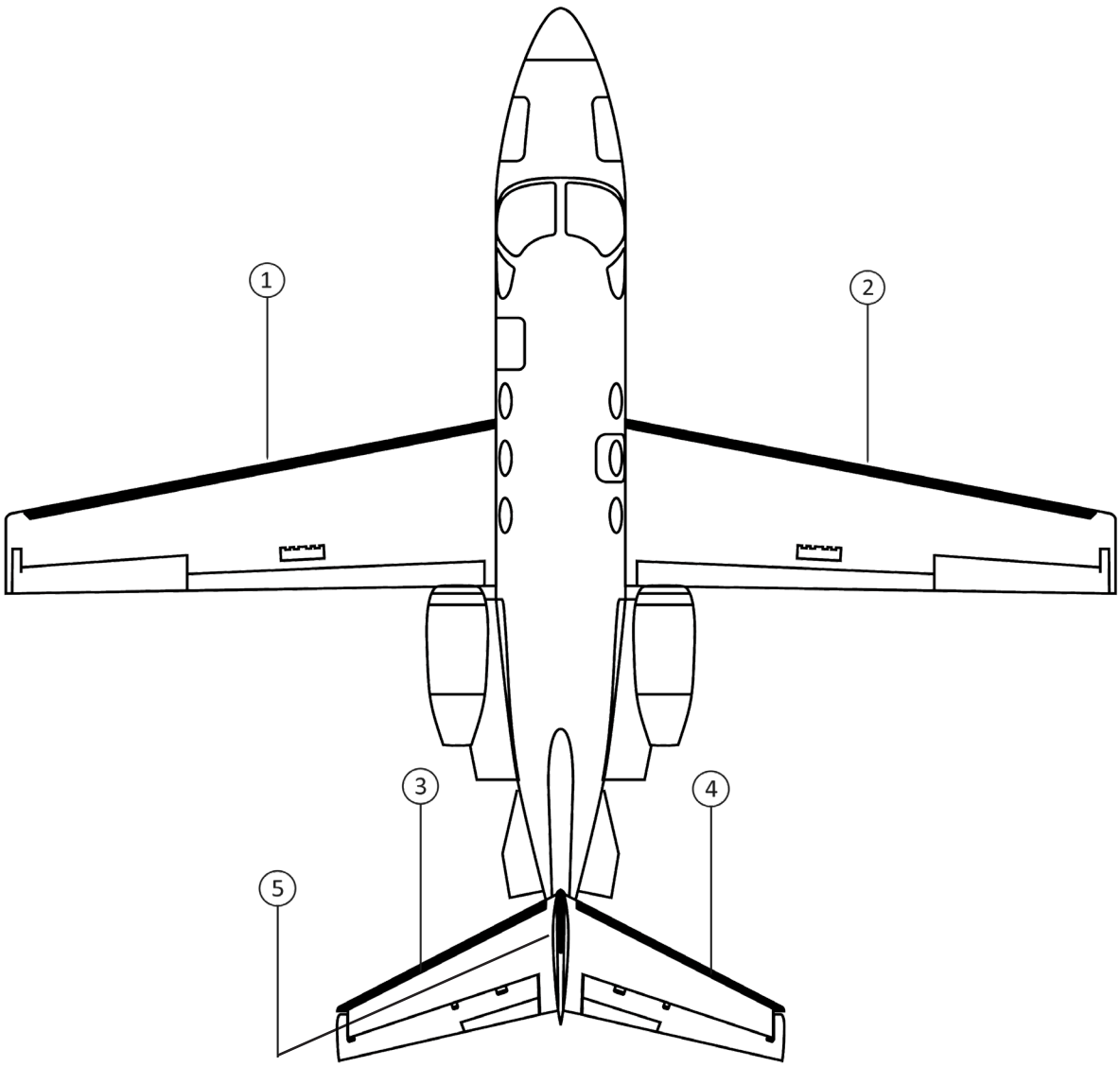

CESSNA 525 (CITATIONJET CJ1) THRU S/N 525-0501

STANDARD DE-ICE BOOTS

POSITION ID	GOODRICH PART NUMBER	AIRCRAFT OEM P/N	DESCRIPTION	QTY PER AIRCRAFT	WT
1	25S-4D5244-01		HORIZONTAL STABILIZER LH DE-ICE BOOT (REPLACED BY 29S-4D5244-11)	1	3.5
1	29S-4D5244-11		HORIZONTAL STABILIZER LH DE-ICE BOOT	1	4.0
2	25S-4D5244-02		HORIZONTAL STABILIZER RH DE-ICE BOOT (REPLACED BY 29S-4D5244-12)	1	3.5
2	29S-4D5244-12		HORIZONTAL STABILIZER RH DE-ICE BOOT	1	4.0

FASTboot® DE-ICE BOOTS

POSITION ID	GOODRICH PART NUMBER	AIRCRAFT OEM P/N	DESCRIPTION	QTY PER AIRCRAFT	WT
1	P29S-4D5244-11		FASTBOOT® HORIZONTAL STABILIZER LH DE-ICE BOOT	1	4.0
2	P29S-4D5244-12		FASTBOOT® HORIZONTAL STABILIZER RH DE-ICE BOOT	1	4.0

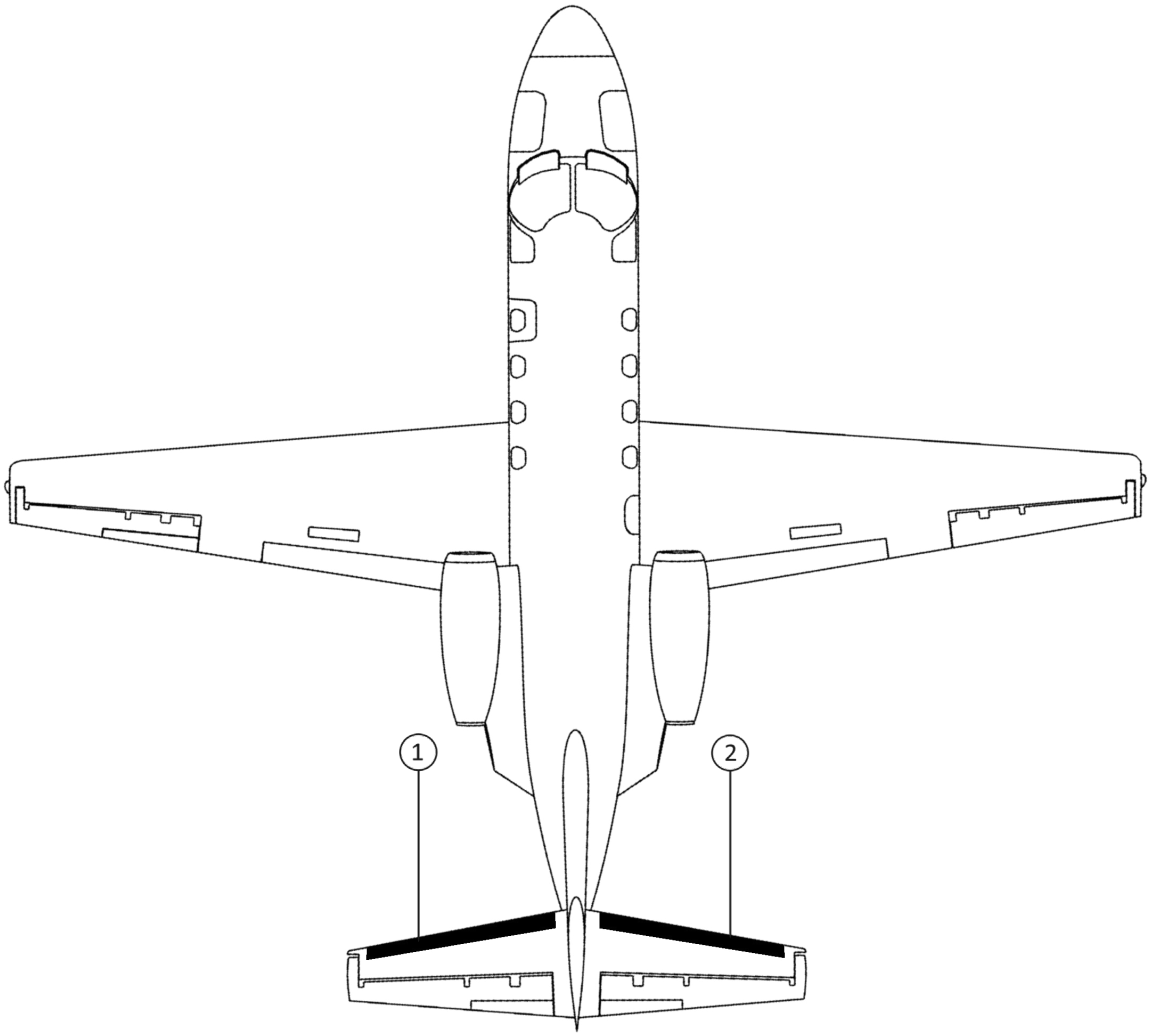

CESSNA 525 (CITATIONJET CJ1) S/N 525-0502 UP

CESSNA 525 (CITATIONJET CJ1) S/N 525-0502 UP

STANDARD DE-ICE BOOTS

POSITION ID	GOODRICH PART NUMBER	AIRCRAFT OEM P/N	DESCRIPTION	QTY PER AIRCRAFT	WT
1	29S-4D5244-11		HORIZONTAL STABILIZER LH DE-ICE BOOT	1	4.0
2	29S-4D5244-12		HORIZONTAL STABILIZER RH DE-ICE BOOT	1	4.0

FASTboot® DE-ICE BOOTS

POSITION ID	GOODRICH PART NUMBER	AIRCRAFT OEM P/N	DESCRIPTION	QTY PER AIRCRAFT	WT
1	P29S-4D5244-11		FASTBOOT® HORIZONTAL STABILIZER LH DE-ICE BOOT	1	4.0
2	P29S-4D5244-12		FASTBOOT® HORIZONTAL STABILIZER RH DE-ICE BOOT	1	4.0

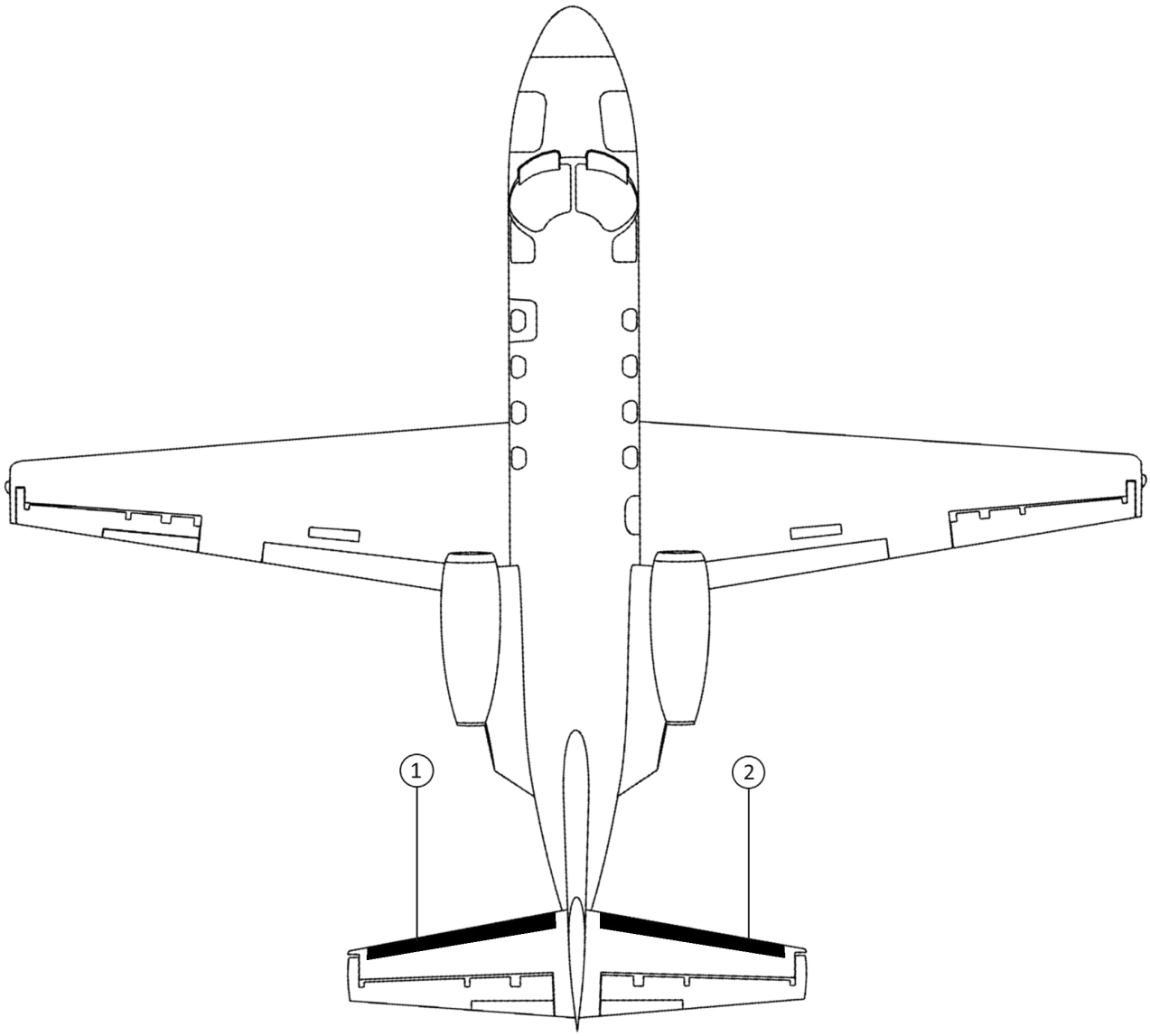

CESSNA 525A (CITATIONJET CJ2)

STANDARD DE-ICE BOOTS

POSITION ID	GOODRICH PART NUMBER	AIRCRAFT OEM P/N	DESCRIPTION	QTY PER AIRCRAFT	WT
1	29S-4D5244-15		HORIZONTAL STABILIZER LH DE-ICE BOOT	1	4.8
2	29S-4D5244-16		HORIZONTAL STABILIZER RH DE-ICE BOOT	1	4.8

FASTboot® DE-ICE BOOTS

POSITION ID	GOODRICH PART NUMBER	AIRCRAFT OEM P/N	DESCRIPTION	QTY PER AIRCRAFT	WT
1	P29S-4D5244-15		FASTBOOT® HORIZONTAL STABILIZER LH DE-ICE BOOT	1	4.8
2	P29S-4D5244-16		FASTBOOT® HORIZONTAL STABILIZER RH DE-ICE BOOT	1	4.8

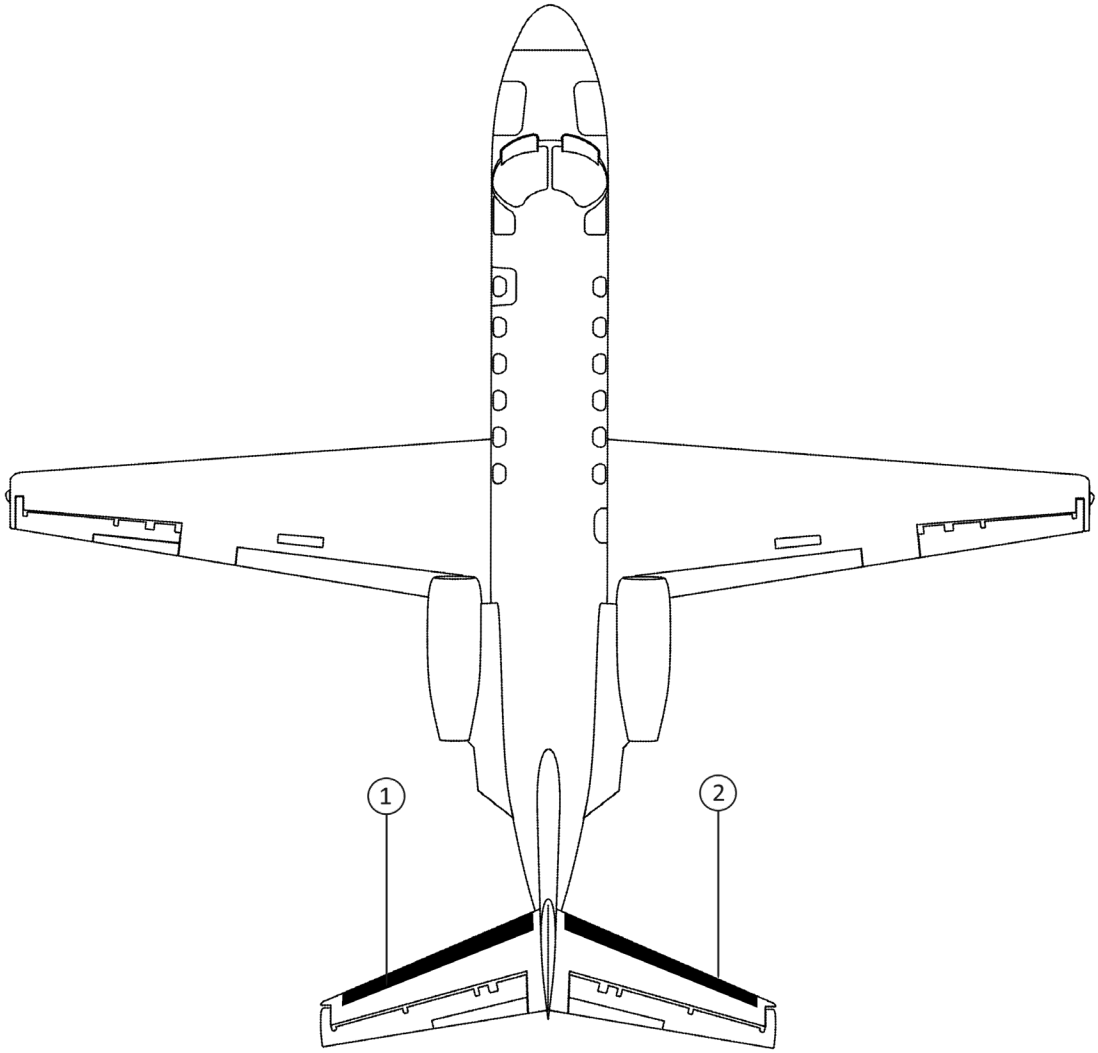

CESSNA 525B (CITATIONJET CJ3)

STANDARD DE-ICE BOOTS

POSITION ID	GOODRICH PART NUMBER	AIRCRAFT OEM P/N	DESCRIPTION	QTY PER AIRCRAFT	WT
1	29S-4D5244-15		HORIZONTAL STABILIZER LH DE-ICE BOOT	1	4.8
2	29S-4D5244-16		HORIZONTAL STABILIZER RH DE-ICE BOOT	1	4.8

FASTboot® DE-ICE BOOTS

POSITION ID	GOODRICH PART NUMBER	AIRCRAFT OEM P/N	DESCRIPTION	QTY PER AIRCRAFT	WT
1	P29S-4D5244-15		FASTBOOT® HORIZONTAL STABILIZER LH DE-ICE BOOT	1	4.8
2	P29S-4D5244-16		FASTBOOT® HORIZONTAL STABILIZER RH DE-ICE BOOT	1	4.8

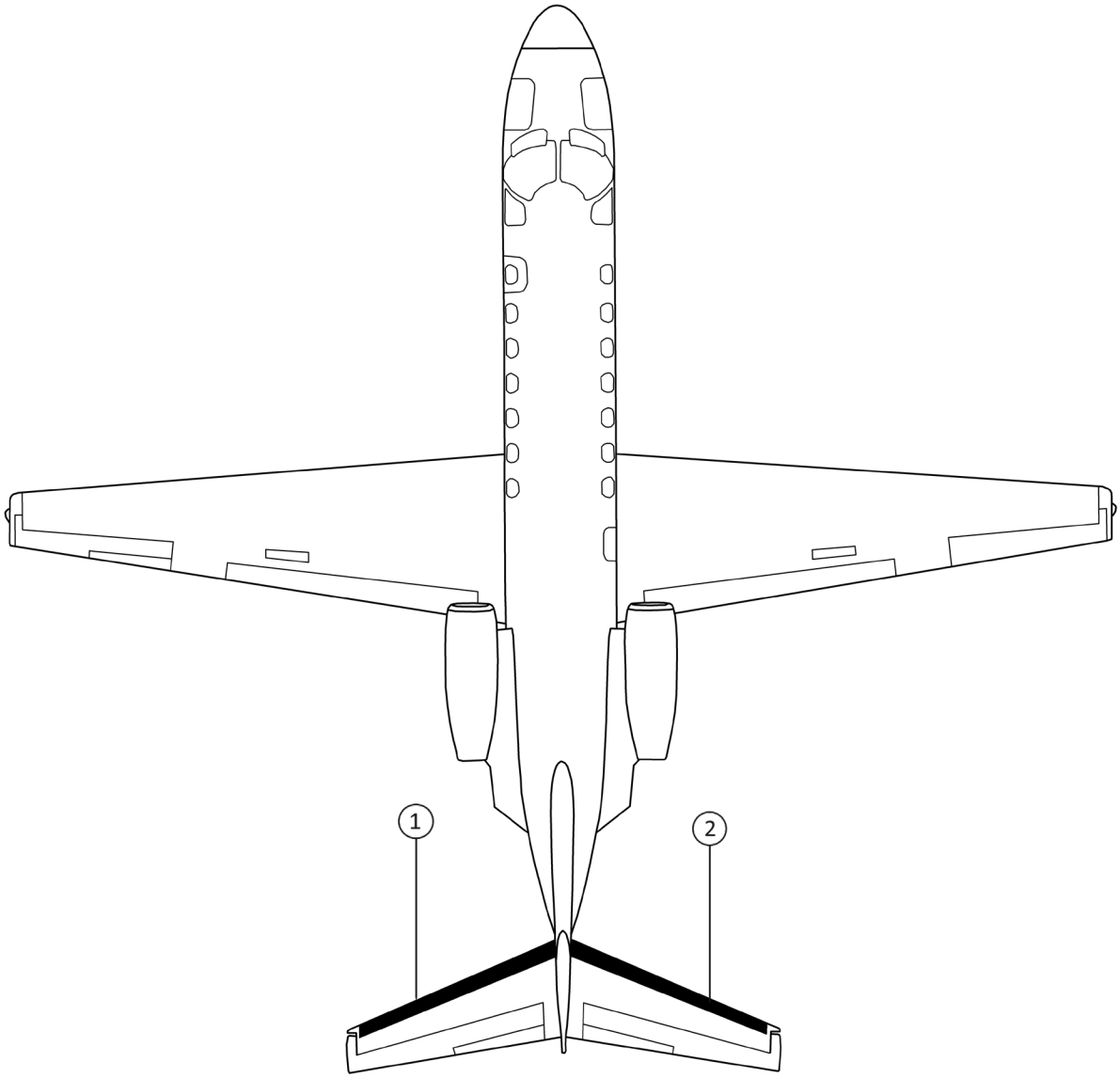

CESSNA 525C (CITATIONJET CJ4)

FASTboot® DE-ICE BOOTS

POSITION ID	GOODRICH PART NUMBER	AIRCRAFT OEM P/N	DESCRIPTION	QTY PER AIRCRAFT	WT
1	P29S4D5329-01		FASTBOOT® HORIZONTAL STABILIZER LH DE-ICE BOOT (REPLACED BY P29S4D5329-03)	1	5.8
1	P29S4D5329-03		FASTBOOT® HORIZONTAL STABILIZER LH DE-ICE BOOT	1	5.8
2	P29S4D5329-02		FASTBOOT® HORIZONTAL STABILIZER RH DE-ICE BOOT (REPLACED BY P29S4D5329-04)	1	5.8
2	P29S4D5329-04		FASTBOOT® HORIZONTAL STABILIZER RH DE-ICE BOOT	1	5.8

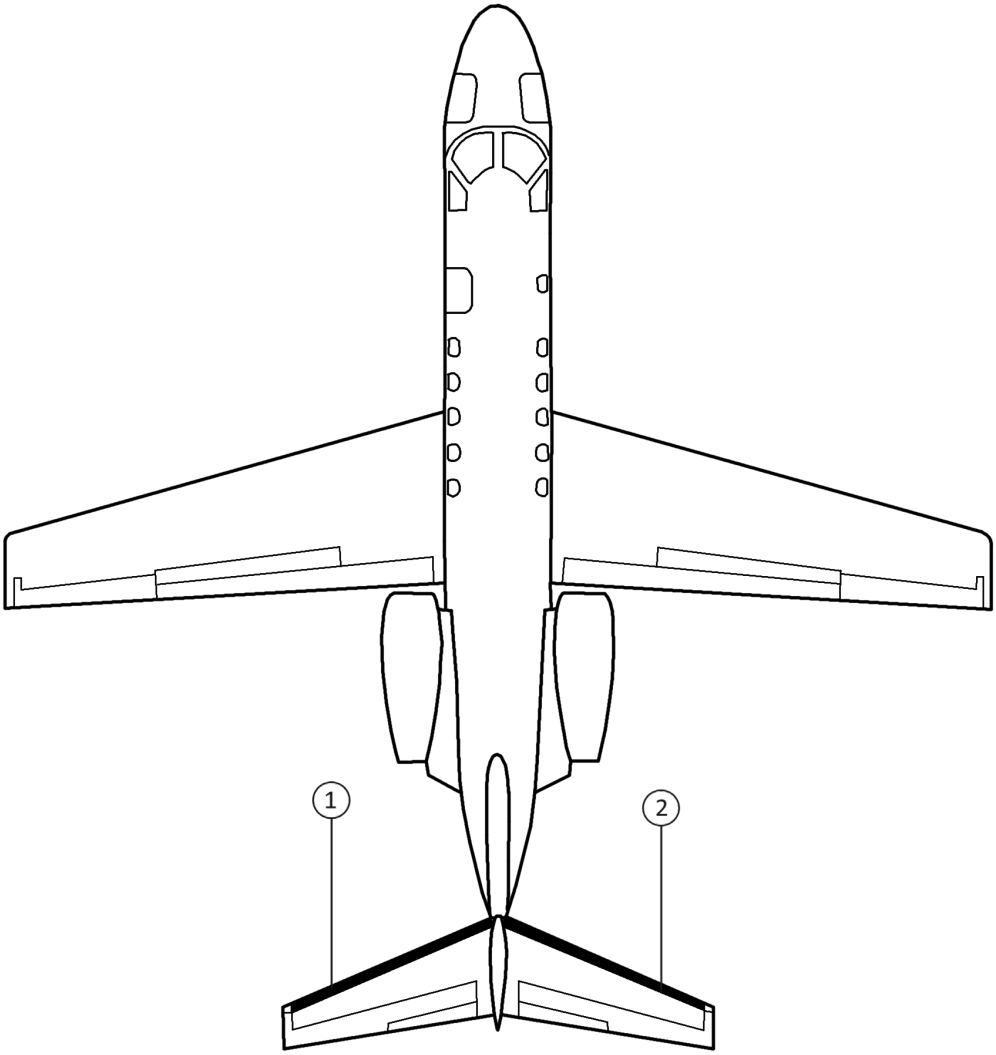

CESSNA 550 (CITATION II/BRAVO)

STANDARD DE-ICE BOOTS

POSITION ID	GOODRICH PART NUMBER	AIRCRAFT OEM P/N	DESCRIPTION	QTY PER AIRCRAFT	WT
1	25S-7D5059-09		WING LH DE-ICE BOOT	1	6.7
2	25S-7D5059-10		WING RH DE-ICE BOOT	1	6.7
3	25S-7D5059-03*		HORIZONTAL STABILIZER LH/RH DE-ICE BOOT	2	2.6
4	25S-7D5059-05		VERTICAL STABILIZER DE-ICE BOOT	1	1.8

OPTIONAL STANDARD DE-ICE BOOTS

POSITION ID	GOODRICH PART NUMBER	AIRCRAFT OEM P/N	DESCRIPTION	QTY PER AIRCRAFT	WT
3	25S-7D5059-13*		HORIZONTAL STABILIZER LH/RH DE-ICE BOOT	2	3.3

*PART NUMBERS (P)25S-7D5059-03 AND (P)29S-7D5059-13 ARE INTERCHANGEABLE. 29S-7D5059-13 IS MORE ROBUST, BUT ALSO HEAVIER

FASTboot® DE-ICE BOOTS

POSITION ID	GOODRICH PART NUMBER	AIRCRAFT OEM P/N	DESCRIPTION	QTY PER AIRCRAFT	WT
1	P25S-7D5059-09		FASTBOOT® WING LH DE-ICE BOOT	1	6.7
2	P25S-7D5059-10		FASTBOOT® WING RH DE-ICE BOOT	1	6.7
3	P25S-7D5059-03*		FASTBOOT® HORIZONTAL STABILIZER LH/RH DE-ICE BOOT	2	2.6
4	P25S-7D5059-05		FASTBOOT® VERTICAL STABILIZER DE-ICE BOOT	1	1.8

OPTIONAL FASTboot® DE-ICE BOOTS

POSITION ID	GOODRICH PART NUMBER	AIRCRAFT OEM P/N	DESCRIPTION	QTY PER AIRCRAFT	WT
3	P25S-7D5059-13*		FASTBOOT® HORIZONTAL STABILIZER LH/RH DE-ICE BOOT	2	3.3

*PART NUMBERS (P)25S-7D5059-03 AND (P)29S-7D5059-13 ARE INTERCHANGEABLE. 29S-7D5059-13 IS MORE ROBUST, BUT ALSO HEAVIER

CESSNA 550 (CITATION II/BRAVO)

CESSNA 550 (CITATION II/BRAVO)

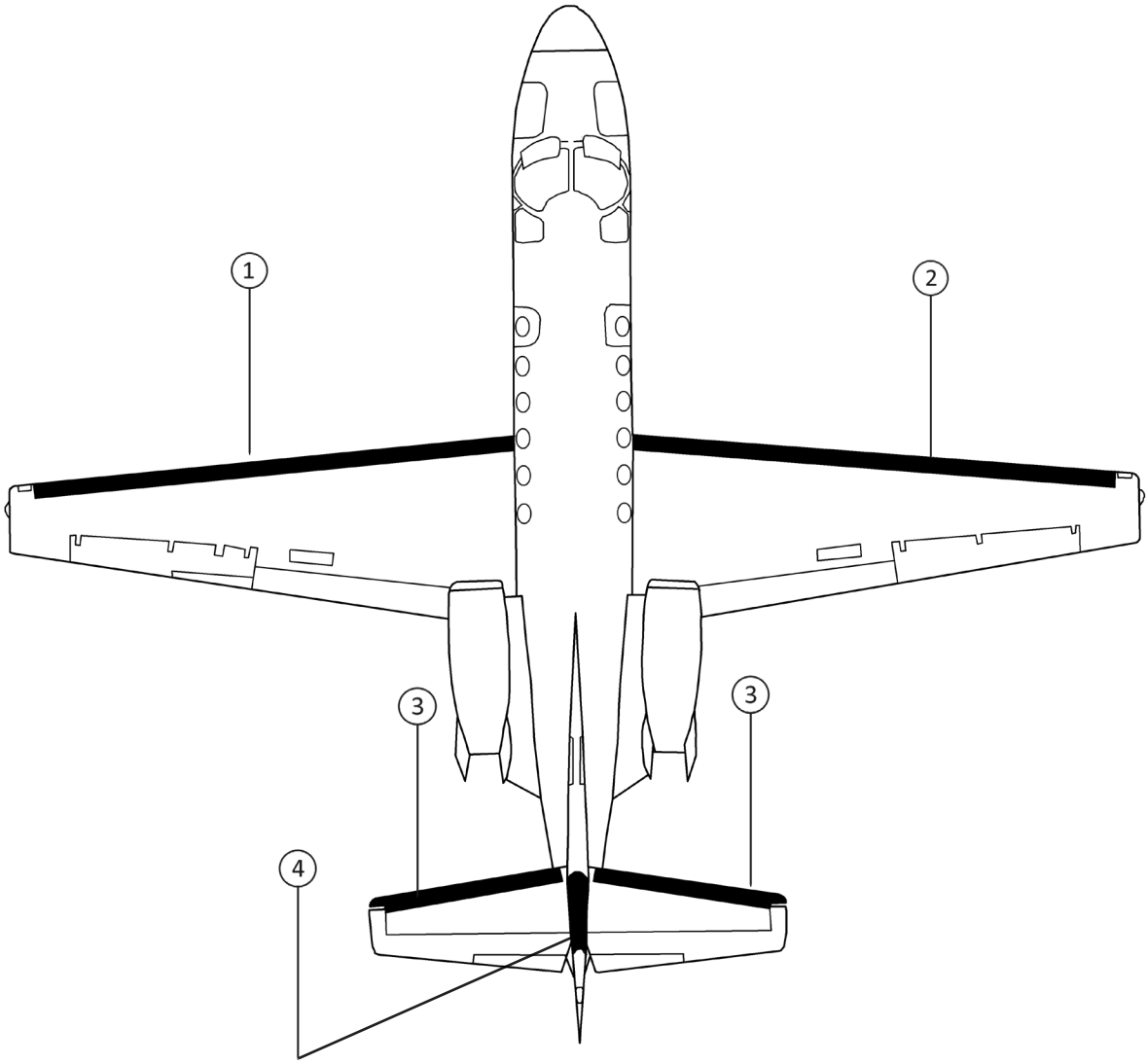

CESSNA 551 (CITATION II/SP)

STANDARD DE-ICE BOOTS

POSITION ID	GOODRICH PART NUMBER	AIRCRAFT OEM P/N	DESCRIPTION	QTY PER AIRCRAFT	WT
1	25S-7D5059-09		WING LH DE-ICE BOOT	1	6.7
2	25S-7D5059-10		WING RH DE-ICE BOOT	1	6.7
3	25S-7D5059-03		HORIZONTAL STABILIZER LH/RH DE-ICE BOOT	2	2.6
4	25S-7D5059-05		VERTICAL STABILIZER DE-ICE BOOT	1	1.8

OPTIONAL STANDARD DE-ICE BOOTS

POSITION ID	GOODRICH PART NUMBER	AIRCRAFT OEM P/N	DESCRIPTION	QTY PER AIRCRAFT	WT
3	29S-7D5059-13*		HORIZONTAL STABILIZER LH/RH DE-ICE BOOT	2	3.3

*PART NUMBERS (P)25S-7D5059-03 AND (P)29S-7D5059-13 ARE INTERCHANGEABLE. 29S-7D5059-13 IS MORE ROBUST, BUT ALSO HEAVIER

FASTboot® DE-ICE BOOTS

POSITION ID	GOODRICH PART NUMBER	AIRCRAFT OEM P/N	DESCRIPTION	QTY PER AIRCRAFT	WT
1	P25S-7D5059-09		FASTBOOT® WING LH DE-ICE BOOT	1	6.7
2	P25S-7D5059-10		FASTBOOT® WING RH DE-ICE BOOT	1	6.7
3	P25S-7D5059-03		FASTBOOT® HORIZONTAL STABILIZER LH/RH DE-ICE BOOT	2	2.6
4	P25S-7D5059-05		FASTBOOT® VERTICAL STABILIZER DE-ICE BOOT	1	1.8

OPTIONAL FASTboot® DE-ICE BOOTS

POSITION ID	GOODRICH PART NUMBER	AIRCRAFT OEM P/N	DESCRIPTION	QTY PER AIRCRAFT	WT
3	P25S-7D5059-13*		FASTBOOT® HORIZONTAL STABILIZER LH/RH DE-ICE BOOT	2	3.3

*PART NUMBERS (P)25S-7D5059-03 AND (P)29S-7D5059-13 ARE INTERCHANGEABLE. 29S-7D5059-13 IS MORE ROBUST, BUT ALSO HEAVIER

CESSNA 551 (CITATION II/SP)

CESSNA 551 (CITATION II/SP)

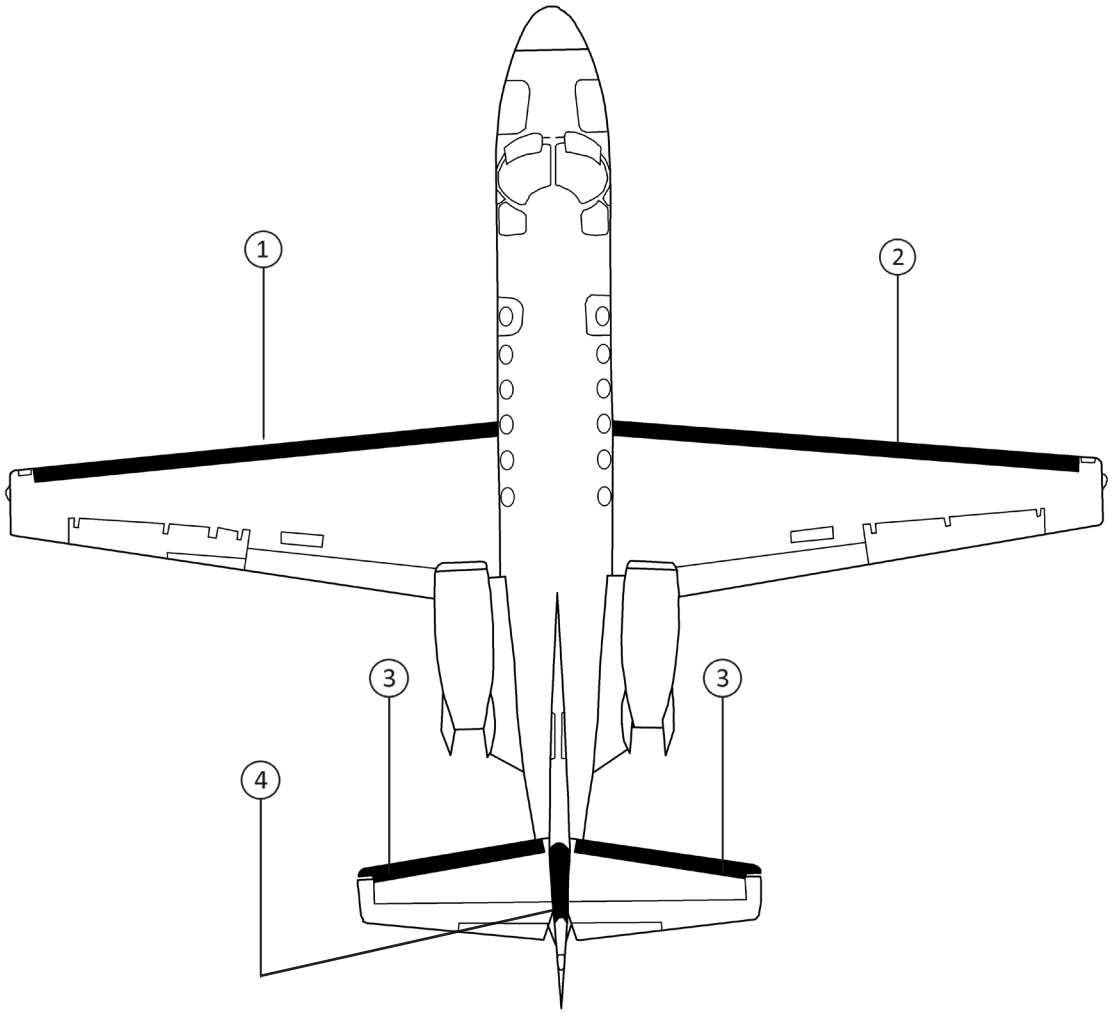

De-ice boot care products

DE-ICER PATCHES AND PIN HOLE KITS ALSO AVAILABLE

Aerospace Protectant™ (32 fl. oz.) P/N 74-451-237-32

Goodrich® Aerospace Protectant™

- Approved for use on all Goodrich de-icers
- Near 100 percent prevention of UV-caused slow fade
- Resistance to dust, soiling and staining
- Water-based formula is environmentally friendly
- Apply as needed – no surface stripping required

Aerospace Cleaner™ (32 fl. oz.) P/N 74-451-238-32

Goodrich® Aerospace Cleaner™

- Approved for use on all Goodrich de-icers
- Can be used on all water-safe materials
- Water-based formula is environmentally friendly
- Apply as needed – no surface stripping required
- Great for removing dirt, grime and bugs

AgeMaster® #1 P/N 74-451-127

AgeMaster® #1

- Rubber preservative that protects against weathering, ozone and ultraviolet rays
- Apply six months after new de-icer is installed
- Reapply every 150 flight hours (twice yearly)
- One quart covers approximately 90 sq. ft. (8.3 sq. m.)

ICEX®II - 6oz
ICEX®II - Pump
ICEX®II - Quart

ICEX®II

- Ice adhesion inhibitor that enhances de-icer performance
- Apply every 50 flight hours during icing season
- One quart covers approximately 400 sq. ft. (37 sq. m)

ShineMaster™ Prep P/N 74-451-179
ShineMaster™ P/N 74-451-178

ShineMaster™

- Cosmetic coating that provides a high-luster shine
- Clean de-icer with ShineMaster Prep before applying 2-3 light coats
- One pint covers approximately 200 sq. ft. (18.6 sq. m)
- Reapply as desired

Specifications subject to change without notice.

CESSNA 560 (CITATION V/ULTRA)

STANDARD DE-ICE BOOTS

POSITION ID	GOODRICH PART NUMBER	AIRCRAFT OEM P/N	DESCRIPTION	QTY PER AIRCRAFT	WT
1	35-5D5230-01		WING LH DE-ICE BOOT	1	11.9
2	35-5D5230-02		WING RH DE-ICE BOOT	1	11.9
3	29S-5D5225-05		HORIZONTAL STABILIZER LH DE-ICE BOOT	1	4.3
4	29S-5D5225-06		HORIZONTAL STABILIZER RH DE-ICE BOOT	1	4.3

FASTboot® DE-ICE BOOTS

POSITION ID	GOODRICH PART NUMBER	AIRCRAFT OEM P/N	DESCRIPTION	QTY PER AIRCRAFT	WT
1	P35-5D5230-01		FASTBOOT® WING LH DE-ICE BOOT	1	11.9
2	P35-5D5230-02		FASTBOOT® WING RH DE-ICE BOOT	1	11.9
3	P29S-5D5225-05		FASTBOOT® HORIZONTAL STABILIZER LH DE-ICE BOOT	1	4.3
4	P29S-5D5225-06		FASTBOOT® HORIZONTAL STABILIZER RH DE-ICE BOOT	1	4.3

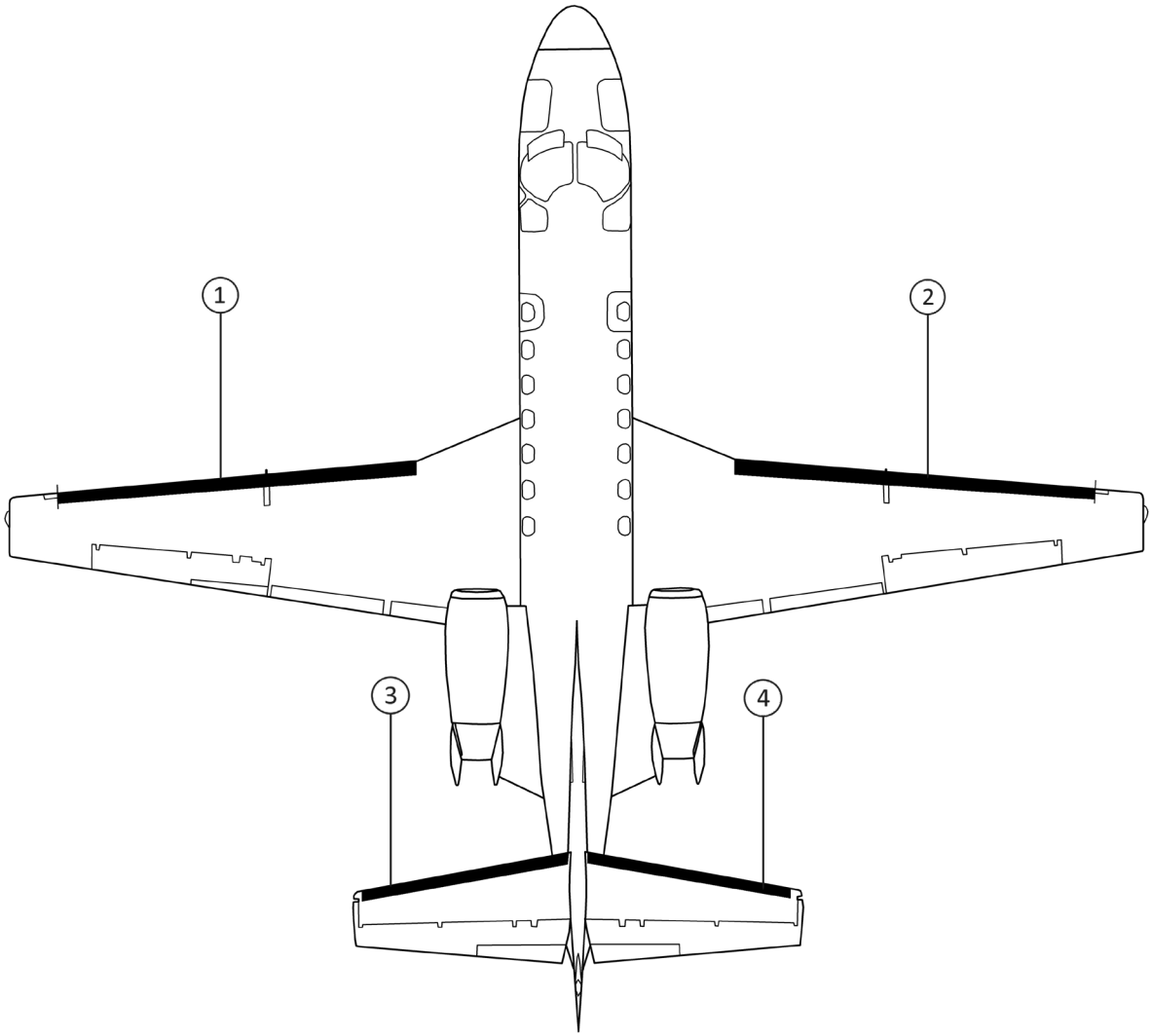

CESSNA 560 XL (EXCEL)

STANDARD DE-ICE BOOTS

POSITION ID	GOODRICH PART NUMBER	AIRCRAFT OEM P/N	DESCRIPTION	QTY PER AIRCRAFT	WT
1	29S4D5280-01		HORIZONTAL STABILIZER LH DE-ICE BOOT	1	5.4
2	29S4D5280-02		HORIZONTAL STABILIZER RH DE-ICE BOOT	1	5.4

OPTIONAL STANDARD DE-ICE BOOTS

POSITION ID	GOODRICH PART NUMBER	AIRCRAFT OEM P/N	DESCRIPTION	QTY PER AIRCRAFT	WT
1	29S4D5280-11*		HORIZONTAL STABILIZER LH (ESTANE®) DE-ICE BOOT	1	5.8
2	29S4D5280-12*		HORIZONTAL STABILIZER RH (ESTANE®) DE-ICE BOOT	1	5.8
1	S29S4D5280-21		HORIZONTAL STABILIZER LH SILVERboot™ DE-ICE BOOT	1	6.2
2	S29S4D5280-22		HORIZONTAL STABILIZER RH SILVERboot™ DE-ICE BOOT	1	6.2

*ESTANE DE-ICE BOOTS NEED TO BE REPLACED IN PAIRS

*ESTANE® DE-ICERS HAVE A SURFACE PLY RESISTANT TO DIESTER TYPE ENGINE OIL

FASTboot® DE-ICE BOOTS

POSITION ID	GOODRICH PART NUMBER	AIRCRAFT OEM P/N	DESCRIPTION	QTY PER AIRCRAFT	WT
1	P29S4D5280-11*		FASTBOOT® HORIZONTAL STABILIZER LH DE-ICE BOOT	1	5.8
2	P29S4D5280-12*		FASTBOOT® HORIZONTAL STABILIZER LH DE-ICE BOOT	1	5.8
1	PS29S4D5280-21		FASTBOOT® HORIZONTAL STABILIZER LH SILVERboot™ DE-ICE BOOT	1	6.6
2	PS29S4D5280-22		FASTBOOT® HORIZONTAL STABILIZER RH SILVERboot™ DE-ICE BOOT	1	6.6

*ESTANE DE-ICE BOOTS NEED TO BE REPLACED IN PAIRS

*ESTANE® DE-ICERS HAVE A SURFACE PLY RESISTANT TO DIESTER TYPE ENGINE OIL

CESSNA 560 XL (EXCEL)

CESSNA 560 XL (EXCEL)

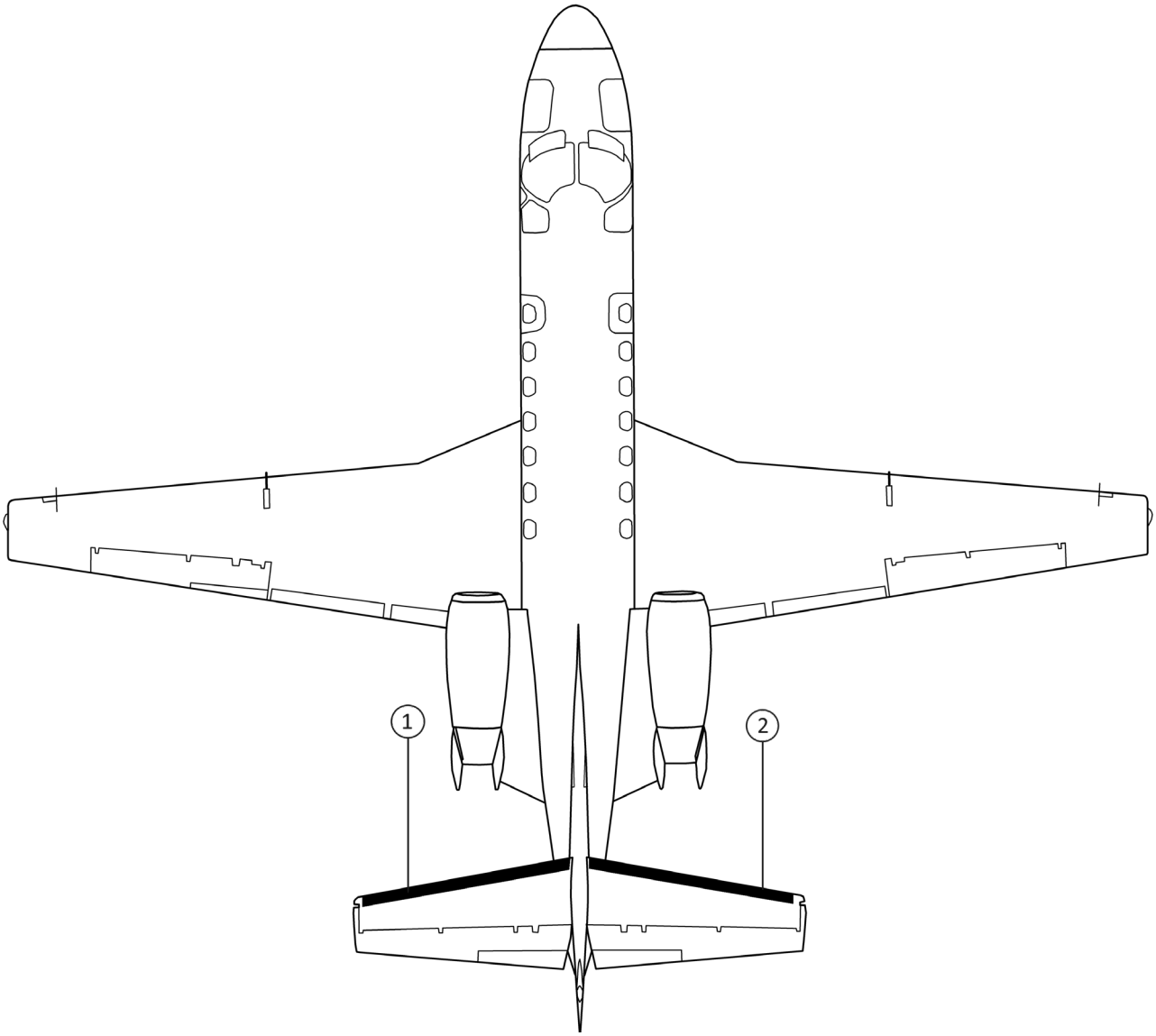

CESSNA 560 XLS (EXCEL)

STANDARD DE-ICE BOOTS

POSITION ID	GOODRICH PART NUMBER	AIRCRAFT OEM P/N	DESCRIPTION	QTY PER AIRCRAFT	WT
1	29S4D5280-01		HORIZONTAL STABILIZER LH DE-ICE BOOT	1	5.4
2	29S4D5280-02		HORIZONTAL STABILIZER RH DE-ICE BOOT	1	5.4

OPTIONAL STANDARD DE-ICE BOOTS

POSITION ID	GOODRICH PART NUMBER	AIRCRAFT OEM P/N	DESCRIPTION	QTY PER AIRCRAFT	WT
1	29S4D5280-11*		HORIZONTAL STABILIZER LH (ESTANE®) DE-ICE BOOT	1	5.8
2	29S4D5280-12*		HORIZONTAL STABILIZER RH (ESTANE®) DE-ICE BOOT	1	5.8
1	S29S4D5280-21		HORIZONTAL STABILIZER LH SILVERboot™ DE-ICE BOOT	1	6.2
2	S29S4D5280-22		HORIZONTAL STABILIZER RH SILVERboot™ DE-ICE BOOT	1	6.2

*ESTANE DE-ICE BOOTS NEED TO BE REPLACED IN PAIRS

*ESTANE® DE-ICERS HAVE A SURFACE PLY RESISTANT TO DIESTER TYPE ENGINE OIL

FASTboot® DE-ICE BOOTS

POSITION ID	GOODRICH PART NUMBER	AIRCRAFT OEM P/N	DESCRIPTION	QTY PER AIRCRAFT	WT
1	P29S4D5280-11*		FASTBOOT® HORIZONTAL STABILIZER LH DE-ICE BOOT	1	5.8
2	P29S4D5280-12*		FASTBOOT® HORIZONTAL STABILIZER LH DE-ICE BOOT	1	5.8
1	PS29S4D5280-21		FASTBOOT® HORIZONTAL STABILIZER LH SILVERboot™ DE-ICE BOOT	1	6.6
2	PS29S4D5280-22		FASTBOOT® HORIZONTAL STABILIZER RH SILVERboot™ DE-ICE BOOT	1	6.6

*ESTANE DE-ICE BOOTS NEED TO BE REPLACED IN PAIRS

*ESTANE® DE-ICERS HAVE A SURFACE PLY RESISTANT TO DIESTER TYPE ENGINE OIL

CESSNA 560 XLS (EXCEL)

CESSNA 560 XLS (EXCEL)

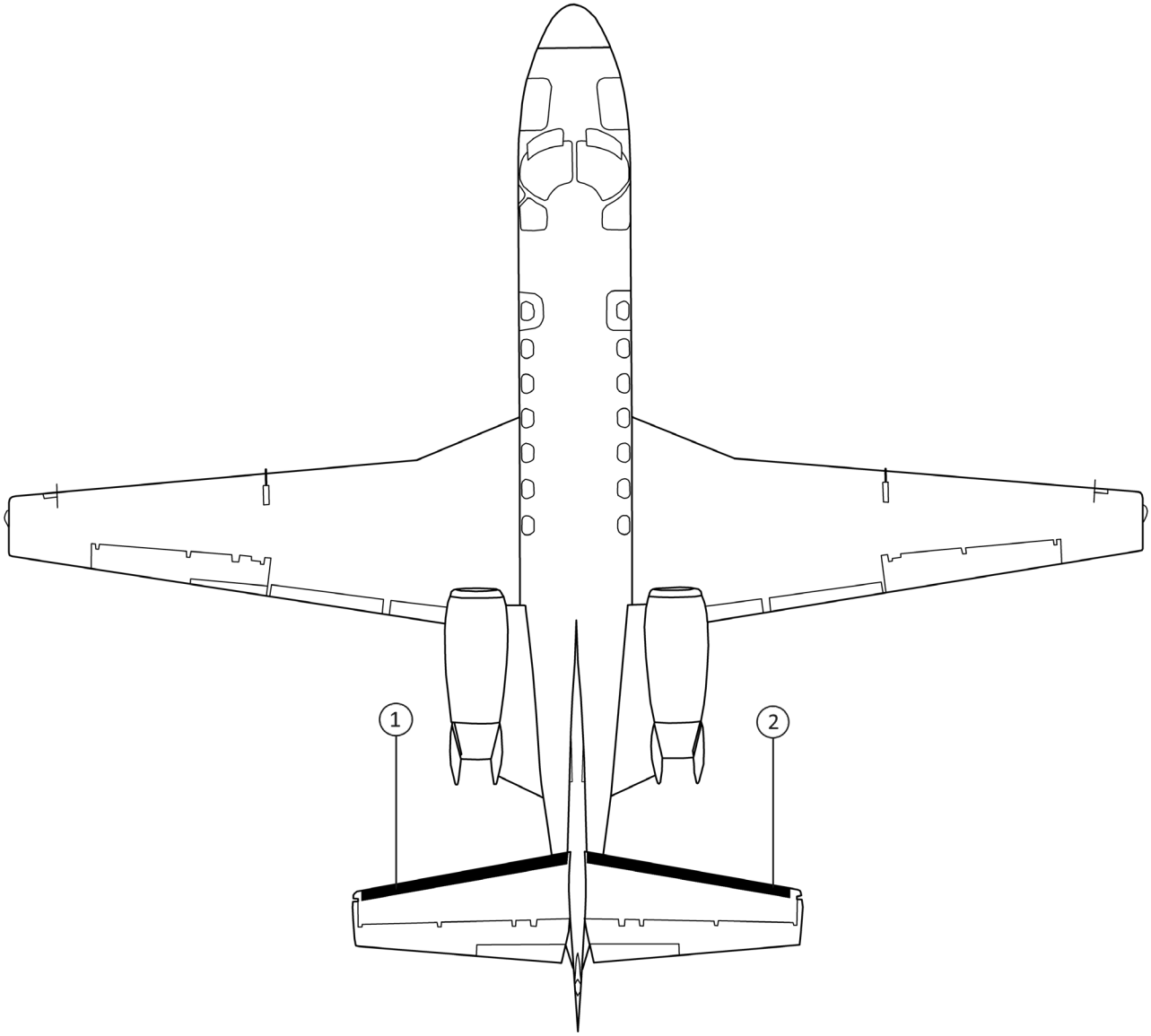

CESSNA 560 XLS+ (EXCEL)

STANDARD DE-ICE BOOTS

POSITION ID	GOODRICH PART NUMBER	AIRCRAFT OEM P/N	DESCRIPTION	QTY PER AIRCRAFT	WT
1	29S4D5280-01		HORIZONTAL STABILIZER LH DE-ICE BOOT	1	5.4
2	29S4D5280-02		HORIZONTAL STABILIZER RH DE-ICE BOOT	1	5.4

OPTIONAL STANDARD DE-ICE BOOTS

POSITION ID	GOODRICH PART NUMBER	AIRCRAFT OEM P/N	DESCRIPTION	QTY PER AIRCRAFT	WT
1	29S4D5280-11*		HORIZONTAL STABILIZER LH (ESTANE®) DE-ICE BOOT	1	5.8
2	29S4D5280-12*		HORIZONTAL STABILIZER RH (ESTANE®) DE-ICE BOOT	1	5.8
1	S29S4D5280-21		HORIZONTAL STABILIZER LH SILVERboot™ DE-ICE BOOT	1	6.2
2	S29S4D5280-22		HORIZONTAL STABILIZER RH SILVERboot™ DE-ICE BOOT	1	6.2

*ESTANE DE-ICE BOOTS NEED TO BE REPLACED IN PAIRS

*ESTANE® DE-ICERS HAVE A SURFACE PLY RESISTANT TO DIESTER TYPE ENGINE OIL

FASTboot® DE-ICE BOOTS

POSITION ID	GOODRICH PART NUMBER	AIRCRAFT OEM P/N	DESCRIPTION	QTY PER AIRCRAFT	WT
1	P29S4D5280-11*		FASTBOOT® HORIZONTAL STABILIZER LH DE-ICE BOOT	1	5.8
2	P29S4D5280-12*		FASTBOOT® HORIZONTAL STABILIZER LH DE-ICE BOOT	1	5.8
1	PS29S4D5280-21		FASTBOOT® HORIZONTAL STABILIZER LH SILVERboot™ DE-ICE BOOT	1	6.6
2	PS29S4D5280-22		FASTBOOT® HORIZONTAL STABILIZER RH SILVERboot™ DE-ICE BOOT	1	6.6

*ESTANE DE-ICE BOOTS NEED TO BE REPLACED IN PAIRS

*ESTANE® DE-ICERS HAVE A SURFACE PLY RESISTANT TO DIESTER TYPE ENGINE OIL

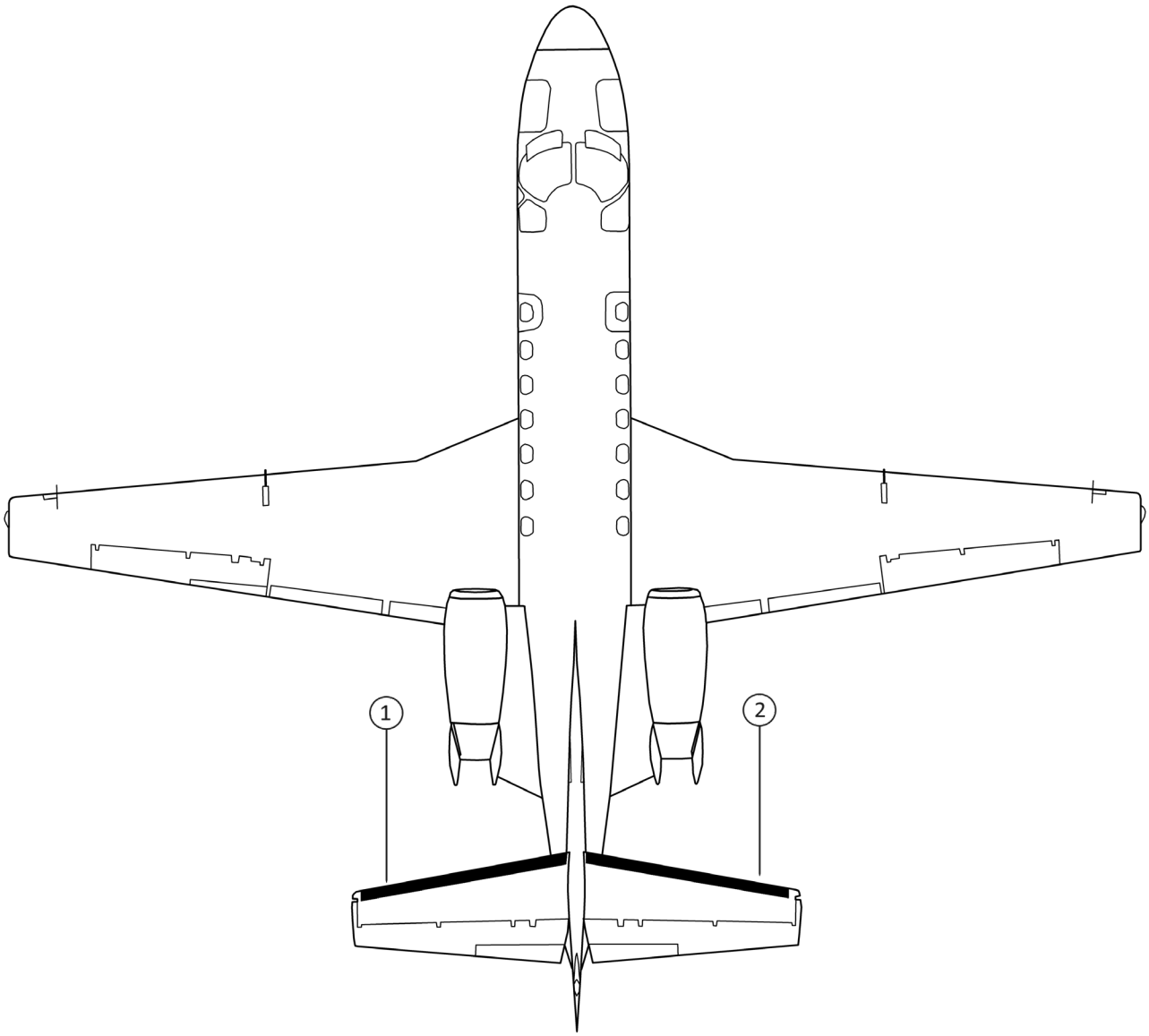
1
2

Pneumatic De-Icing System Components

Switches, Timers, Water Separators, Valves, Miscellaneous Hardware

PART NUMBER	DESCRIPTION	UNIT
2D1230	Compression Washer	Each
3D2353-06	Ejector Flow Control Valve	Each
3D2495-02	Timer	Each
3D2498-02	Timer	Each
3D2600-03	Timer	Each
3D2900-01	Timer	Each
3D3519-06	Ejector Flow Control Valve	Each

Ejectors, Valves, Water Separators

(Available through Master Distribution Aviall only)

PART NUMBER	DESCRIPTION	UNIT
19E26-2A	Air Ejector	Each
38E85-2B	Regulating Valve	Each
38E85-11A	Regulating Valve	Each

Stall Strips

PART NUMBER	DESCRIPTION	UNIT
3D2487	Cessna 500/560	Each
3D2802	Cessna 441	Each
3D3066	Beech 2000	Each
3D3166-1	Beech 1900D E	Each
3D3166-3	Beech 1900D (neoprene)	Each
P3D3166-3	Beech 1900D (PSA neoprene)	Each

Installation, Maintenance & Repair Materials

PART NUMBER	DESCRIPTION	UNIT
74-451-AA	**Universal Fastpatch ® Repair Kit for Pneumatic De-Icers**	**Each**
74-451-206	Primer Pen	Each
74-451-187	Small Oval Patch (1-1/4" x 2.5")	Lot of 30
74-451-188	Medium Oval Patch (2-1/2" x 5")	Lot of 30
74-451-189	Large Oval Patch (5"x10")	Lot of 10
74-451-192	Emery Cloth (9" x 11")	Lot of 3
74-451-87	Buffing Shield	Each
74-451-AE	**Pinhole Repair Kit for Pneumatic De-Icers**	**Each**
74-451-201	Accelerator	Each (8.5 gms)
74-451-202	Buffing Shield	Each
74-451-205	Application Tool	Each
74-451-209	Cement	Lot of 24
74-451-210	Mixing Cup	Lot of 24
74-451-211	Mixing Tool	Lot of 24
74-451-212	Application Template	Lot of 50
74-451-AP	**Pinhole Repair Kit for Estane ® /Urethane (Silver) Pneumatic De-Icers**	**Each**
74-451-201	Accelerator	Each (8.5 gms)
74-451-202	Buffing Shield	Each
74-451-205	Application Tool	Each
74-451-234	Silver Cement	Lot of 24
74-451-210	Mixing Cup	Lot of 24
74-451-211	Mixing Tool	Lot of 24
74-451-212	Application Template	Lot of 50
74-451-F	**Erosion Shield Repair Kit**	**Each**
74-451-33	Small Oval Patch (1-1/4" x 2-1/2")	Lot of 20
74-451-34	Medium Oval Patch (2-1/2" x 5")	Lot of 10
74-451-35	2-1/2" Round Patch	Lot of 20
74-451-36	5" Round Patch	Lot of 10
74-451-37	Cement	Each (1 pt)
74-451-38	Accelerator	Each (1/2 oz)
74-451-70	1/2" Flat Cement Brush	Each
74-451-73	1/8" Metal Stitcher/Roller	Each
74-451-75	Emery Buffing Stick	Lot of 6
74-451-87	Oval Buffing Shield	Each
74-451-91	Round Buffing Shield	Each
74-451-K	**Edge Sealer for Black Estane ® Pneumatic De-Icers**	**Each**
74-451-117-1	Sealer/Cement	Each (1 qt)
74-451-120	Accelerator	Each (4 oz)
74-451-L	**Resurfacing Kit for Black Estane ® or Neoprene Pneumatic De-Icers**	**Each**
74-451-120	Accelerator	Each (4 oz)
74-451-122	Primer	Each (1 qt)
74-451-123	Resurfacing Coat	Each (1 qt)

Installation, Maintenance & Repair Materials

PART NUMBER	DESCRIPTION	UNIT
74-451-P	**Edge Sealer for Black Estane ® or Neoprene De-Icers**	**Each**
74-451-144	(Superseded By 74-451-220)	
74-451-220	Cement	Each (1 pt)
74-451-148	Edge Sealer Strip	Each (50 ft)
74-451-150	(Superseded By 74-451-221)	
74-451-221	Accelerator	Each (1/2 oz)
74-451-185	Primer	Each (1/2 pt)
74-451-Q-1	**Edge Filler Kit for Silver De-Icers**	**Each**
74-451-158	Edge Filler	Each (1 pt)
74-451-159	Accelerator	Each (1/2 pt)
74-451-Q-2	**Edge Filler Kit for Silver De-Icers**	**Each**
74-451-160	Edge Filler	Each (1 qt)
74-451-161	Accelerator	Eact (1 pt)
74-451-R-1	**Edge Sealer Kit for Silver De-Icers**	**Each**
74-451-152	Accelerator	Each (1/2 oz)
74-451-169-1	Edge Sealer	Each (1 pt)
74-451-R-2	**Edge Sealer Kit for Silver De-Icers**	**Each**
74-451-143	Accelerator	Each (2 oz)
74-451-169-2	Edge Sealer	Each (1 qt)
74-451-AQ-1	**Edge Sealer Kit for Grey De-Icers**	**Each**
74-451-152	Accelerator	Each (1/2 oz)
74-451-235-1	Edge Sealer	Each (1 pt)
74-451-AQ-2	**Edge Sealer Kit for Grey De-Icers**	**Each**
74-451-143	Accelerator	Each (2 oz)
74-451-235-2	Edge Sealer	Each (1 qt)
74-451-S-1	**Silver De-Icer Fast patch® Repair Kit**	**Each**
74-451-192	Medium Grit Emery Cloth	Lot of 3
74-451-87	Buffing Shield	Each
74-451-206	Primer Pen	Each
74-451-219-1	Small Oval Patch (1-1/4"x 2")	Lot of 30
74-451-219-2	Medium Oval Patch (2-1/2"x5")	Lot of 30
74-451-219-3	Large Oval Patch (5"x10")	Lot of 10
74-451-S-2	**Silver De-Icer Surface Repair Kit**	**Each**
74-451-156	Surface Spray Coating	Each (8 oz)
74-451-157	Jet Spray Pack	Each
74-451-Z	**Maintenance Kit for Neoprene De-Icers**	**Each**
74-451-127	AgeMaster® No. 1 Rubber Preservative	Each (1 qt)
74-451-178	ShineMaster® Cosmetic Coating	Each (1 pt)
74-451-179	ShineMaster® Prep Cleaner	Each (1 qt)
ICEX ® II PUMP	Ice Adhesion Inhibitor	Each (16 oz)

Installation, Maintenance & Repair Materials

PART NUMBER	DESCRIPTION	UNIT
B-118-1	3/8" Non-Kink De-icer Hose (cut in 11 foot lengths for shipment)	Linear Foot
B-118-2	5/8" Non-Kink De-icer Hose (cut in 11 foot lengths for shipment)	Linear Foot
B-118-3	3/4" Non-Kink De-icer Hose (cut in 11 foot lengths for shipment)	Linear Foot
B-118-7	1/2" Non-Kink De-icer Hose (cut in 11 foot lengths for shipment)	Linear Foot
ICEX® II 6oz	Wipe-on Ice Adhesion Inhibitor	Each (6 oz)
ICEX® II PUMP	Non-Aerosol Pump Spray Ice Adhesion Inhibitor	Each (16 oz)
ICEX® II QUART	Wipe-on Ice Adhesion Inhibitor (minimum buy - 12 each)	Each (1 qt)
3D1819-8-10	1/2" Diameter Plastic Pneumatic System Tubing	Foot
74-451-11	A-56-B Conductive Edge Sealer for Neoprene Pneumatic De-Icers	Each (1/2 pt)
74-451-11-1	A-56-B Conductive Edge Sealer for Neoprene Pneumatic De-Icers	Each (1 qt)
74-451-33	Small Oval Patch 1-1/4"x 2-1/2" for Neoprene Erosion Shield	Lot of 20
74-451-34	Medium Oval Patch 2-1/2" x 5" for Neoprene Erosion Shield	Lot of 10
74-451-35	2-1/2" Round Patch for Neoprene Erosion Shield (74-451-F Kit)	Lot of 20
74-451-36	5" Round Patch for Neoprene Erosion Shield (74-451-F Kit)	Lot of 10
74-451-37	A-68-B Patch Cement for Neoprene Erosion Shield Patches (74-451-F Kit)	Each (1 pt)
74-451-38	A-53-B Accelerator for Patch Cement (74-451-F Kit)	Each (1/2 oz)
74-451-45	Hook Knife	Each
74-451-70	Cement Brush (74-451-F Kit)	Lot of 2
74-451-73	1/8" Metal Stitcher Roller for Patch Installation (74-451-F Kit)	Each
74-451-74	2"x 2-1/2" Rubber Roller for De-Icer Installation & Patch Application	Each
74-451-75	Emery Buffing Stick (74-451-F Kit)	Lot of 6
74-451-87	Oval Buffing Shield (74-451-AA & 74-451-F & 74-451-S-1 Kits)	Each
74-451-89	1/4" Steel Stitcher Roller for De-Icer Installation & Patch Application	Each
74-451-91	Round Buffing Shield for Erosion Shield Patch Preparation (74-451-F Kit)	Each
74-451-99	A-851-B Fuel Barrier Cement for Pneumatic De-Icer Installation	Each (1 qt)
74-451-117-1	Edge Sealer for Black Estane ® Pneumatic De-Icers (74-451-K Kit)	Each (1 qt)
74-451-120	Accelerator for Black Estane ® Pneumatic De-Icer Edge Sealer (74-451-K Kit) Accelerator for Black Pneumatic De-Icer Resurfacing Kit (74-451-L Kit)	Each (4 oz)
74-451-122	Primer for Resurfacing Black Neoprene Pneumatic De-Icers (74-451-L Kit)	Each (1 qt)
74-451-123	Resurfacing Coat for Black Pneumatic De-Icers (74-451-L Kit)	Each (1 qt)
74-451-127	Age Master ® No. 1 Ice Adhesion inhibitor (74-451-Z Kit)	Each (1 qt)
74-451-143	Accelerator for Silver De-Icers Edge Sealer (74-451-Z Kit)	Each (2 oz)
74-451-144	Superseded By 74-451-220	
74-451-148	Edge Sealer Tape for Black Pneumatic De-Icers (74-451-P Kit)	Each (50 ft)
74-451-150	Superseded By 74-451-222	
74-451-152	Accelerator (74-451-R-1 Kit)	Each (1/2 oz)
74-451-156	Silver Surface Spray for Silver De-Icer Touch-up (74-451-S-2 Kit)	Each (8 oz)
74-451-157	Jet Spray Pack for Silver De-Icer Touch-up (74-451-S-2 Kit)	Each
74-451-158	Edge Filler for Silver De-Icers (74-451-Q-1 Kit)	Each (1 pt)
74-451-159	Accelerator for Edge Filler for Silver De-Icers (74-451-Q-1 Kit)	Each (1/2 pt)
74-451-160	Edge Filler for Silver De-Icers (74-451-Q-2 Kit)	Each (1 qt)
74-451-161	Accelerator for Edge Filler for Silver De-Icers (74-451-Q-2 Kit)	Each (1 pt)

Installation, Maintenance & Repair Materials

PART NUMBER	DESCRIPTION	UNIT
74-451-167	Silver Surface Spray for Silver De-Icer Repair (74-451-S-2 Kit)	Each (1 gal)
74-451-169-1	Silver De-Icer Edge Sealer (74-451-R-1 Kit)	Each (1 pt)
74-451-169-2	Silver De-Icer Edge Sealer (74-451-R-2 Kit)	Each (1 qt)
74-451-178	ShineMaster® Cosmetic Coating for De-Icers	Each (1 pt)
74-451-179	ShineMaster® Prep Cleaner for De-Icers	Each (1 qt)
74-451-180	Edge Filler for Black Pneumatic De-Icers (PRC 1425-2 part Kit)	Each (1/2 pt)
74-451-185	Primer for Edge Sealer Tape for Black Pneumatic De-Icers (74-451-P Kit)	Each (1/2 pt)
74-451-187-1	Small Oval Patch, 1-1/4” x 2”, for Black Pneumatic De-Icer Repair (74-451-AA Kit)	Lot of 1
74-451-187-5	Small Oval Patch, 1-1/4" x 2", for Black Pneumatic De-Icer Repair (74-451-AA Kit)	Lot of 5
74-451-187	Small Oval Patch, 1-1/4" x 2", for Black Pneumatic De-Icer Repair (74-451-AA Kit)	Lot of 30
74-451-188-1	Medium Oval Patch, 2-1/2” x 5”, for Black Pneumatic De-Icer Repair (74-451-AA Kit)	Lot of 1
74-451-188-5	Medium Oval Patch, 2-1/2" x 5", for Black Pneumatic De-Icer Repair (74-451-AA Kit)	Lot of 5
74-451-188	Medium Oval Patch, 2-1/2" x 5", for Black Pneumatic De-Icer Repair (74-451-AA Kit)	Lot of 30
74-451-189-1	Large Oval Patch, 5” x 10”, for Black Pneumatic De-Icer Repair (74-451-AA Kit)	Lot of 1
74-451-189-2	Large Oval Patch, 5" x 10", for Black Pneumatic De-Icer Repair (74-451-AA Kit)	Lot of 2
74-451-189	Large Oval Patch, 5" x 10", for Black Pneumatic De-Icer Repair (74-451-AA Kit)	Lot of 10
74-451-192	Emery Cloth 9" x 11" for Patch Repair Preparation (74-451-AA & 74-451-S-1 Kits)	Lot of 3
74-451-201	Accelerator for Pinhole Repair Material (74-451-AE Kit)	Each (1/4 oz)
74-451-202	Buffing Shield for Pinhole Repair Preparation (74-451-AE Kit)	Each
74-451-205	Application Tool for Pinhole Repair Material (74-451-AE Kit)	Each
74-451-206	Fastpatch® Primer (74-451-AA & 74-451-S-1 Kits)	Each (2 oz)
74-451-207	Fastboot® Primer for Fastboot De-Icers	Each (1/2 pt)
74-451-209	Cement, Pinhole Repair Material (74-451-AE Kit) 8.5 grams per packet	Lot of 24
74-451-210	Mixing Cup for Pinhole Repair Material (74-451-AE Kit)	Lot of 24
74-451-211	Mixing Tool for Pinhole Repair Material (74-451-AE Kit)	Lot of 24
74-451-212	Application Template for Pinhole Repair Material (74-451-AE Kit)	Lot of 50
74-451-219-1-5	Small (1-1/4" x 2") Oval Patch for Silver Pneumatic De-Icers (74-451-S-1 Kit)	Lot of 5
74-451-219-1	Small (1-1/4" x 2") Oval Patch for Silver Pneumatic De-Icers (74-451-S-1 Kit)	Lot of 30
74-451-219-2-5	Medium (2-1/2" x 5") Oval Patch for Silver Pneumatic De-Icers (74-451-S-1 Kit)	Lot of 5
74-451-219-2	Medium (2-1/2" x 5") Oval Patch for Silver Pneumatic De-Icers (74-451-S-1 Kit)	Lot of 30
74-451-219-3-2	Large (5" x 10") Oval Patch for Silver Pneumatic De-Icers (74-451-S-1 Kit)	Lot of 2
74-451-219-3	Large (5" x 10") Oval Patch for Silver Pneumatic De-Icers (74-451-S-1 Kit)	Lot of 10
74-451-220	Cement for Black Pneumatic De-Icer Tape Edge Sealer (74-451-P Kit)	Each (1 pt)
74-451-221	Black Pneumatic De-Icer Tape Edge Sealer Accelerator (74-451-P Kit)	Each (1/2 oz)
74-451-237-32	Aerospace Protectant 32oz.	Each (32 oz)
74-451-238-32	Aerospace Cleaner 32oz.	Each (32 oz)
74-451-239-16	SILVERboot™ Polish 16oz	Each (16 oz)
76-150	Cement/Accelerator for Erosion Shoe Installation (2-part Kit)	Each
82-076 (77-798)	Edge Sealer/Accelerator Kit for Propeller De-Icers (2-part Kit)	Each
95-271	Installation Kit for Erosion Shield	Each

Prop De-Icers and Hardware Kits

Prop De-Icers and Hardware Kits

BEECH

AIRCRAFT MODEL	BLADE	PART NUMBER	DESCRIPTION
1079	Hartzell HC-B3WF-4	4E1746-2	Prop De-Icer
		3E1575-1	Timer
		4E1749-2	Brush Block Assemblies - Modular
		4E1853-1	Slip Ring
18	Hartzell HC-B3TN-3	4E1188-3, 4E1188-4	Dual Element Prop De-Icer
		3E1150-10	Prop De-Ice Timer (14/28 Vdc - 34 Amp - 4 Outputs - 34 Sec)
		3E2044-1	Modular Brush Block Assembly
		4E1555-1	Slip Ring Assembly
	Hartzell HC-B3	4E1188-3	Prop De-Icer
		3E1150-10	Prop De-Ice Timer (14/28 Vdc - 34 Amp - 4 Outputs - 34 Sec)
		3E2044-1	Modular Brush Block Assembly
		4E1287-1	Slip Ring Assembly
	Hartzell HC-B3TN-5	4E1188-3, 4E1188-5	Dual Element Prop De-Icer
		4E1889-2	Wire Harness Assembly (3-Wire - 12.76"L)
		3E1150-10	Prop De-Ice Timer (14/28 Vdc - 34 Amp - 4 Outputs - 34 Sec)
		3E1405-2	Modular Brush & Mounting Bracket Assembly
		4E1526-1	Slip Ring Assembly
		4E2200-10	Hotprop® Prop De-Icer
		3E2092-2/6887	Wire Harness Assembly - (2-Wire - 14.56"L - Molded End)
33, 35, 36	McCauley 2A36C23/C82	4E1214-3	Dual Element Prop De-Icer
		3E1150-10	Prop De-Ice Timer (14/28 Vdc - 34 Amp - 4 Outputs - 34 Sec)
		3E2042-1	Modular Brush Block Assembly
		4E1635	Slip Ring & Holder Assembly
		4E2292-3	Hotprop® Prop De-Icer
		3E1899-1	Prop De-Ice Timer (14/28 Vdc - 34A - 90 On/90 Off - Immediate On)
	McCauley 3A32C76	4E1214-3	Dual Element Prop De-Icer
		3E1150-10	Prop De-Ice Timer (14/28 Vdc - 34 Amp - 4 Outputs - 34 Sec)
		3E2042-1	Modular Brush Block Assembly
		4E1681	Slip Ring & Holder Assembly
		4E2292-3	Hotprop® Prop De-Icer
		3E1899-1	Prop De-Ice Timer (14/28 Vdc - 34A - 90 On/90 Off - Immediate On)
F33A, F33C, S35, V35A, V35B, 36, A36	Hartzell HC-F3YR-1RF	4E2292-2	Hotprop® Prop De-Icer, 14V
		3E1964-3	Prop De-Ice Timer (14/28 Vdc - 34A - 2 Outputs - 20 Sec - Manual Step)
		3E2071	Modular Brush Assembly
		4E2200-3	Hotprop® Prop De-Icer, 28V
		3E1964-3	Prop De-Ice Timer (14/28 Vdc - 34A - 2 Outputs - 20 Sec - Manual Step)
		3E2071	Modular Brush Assembly

Prop De-Icers and Hardware Kits

BEECH (CONTINUED)

AIRCRAFT MODEL	BLADE	PART NUMBER	DESCRIPTION
F33A, 35-C33A , A35B, S-35,V-35, A36TC, A36, B36TC	McCauley 3A32C76 or Hartzell PHC-C3YF-1RF	4E2200-2	Hotprop® Prop De-Icer
		3E1964-3	Prop De-Ice Timer (14/28 Vdc - 34A - 2 Outputs - 20 Sec - Manual Step)
		3E2062-2	Modular Brush Assembly
		4E2267	Slip Ring Assembly
S35,V35	Hartzell PHC-A3VF-4	4E1214-3	Dual Element Prop De-Icer
		3E1150-10	Prop De-Ice Timer (14/28 Vdc - 34 Amp - 4 Outputs - 34 Sec)
		3E2042-1	Modular Brush Block Assembly
		4E1650	Slip Ring Assembly
		4E2292-3	Hotprop® Prop De-Icer
		3E1899-1	Prop De-Ice Timer (14/28 Vdc - 34A - 90 On/90 Off - Immediate On)
V35	McCauley 2A36C82/C23	4E2200-8	Thermal Efficient Prop De-Icer
		3E1964-3	Prop De-Ice Timer (14/28 Vdc - 34A - 2 Outputs - 20 Sec - Manual Step)
		3E2062-2	Modular Brush Assembly
		4E2324	Slip Ring Assembly
	McCauley 2A37C223	4E2200-2	Hotprop® Prop De-Icer
		3E1964-3	Prop De-Ice Timer (14/28 Vdc - 34A - 2 Outputs - 20 Sec - Manual Step)
		3E2062-2	Modular Brush Assembly
		4E2324	Slip Ring Assembly
A36	Hartzell HC-C4YF-1E	4E2200-2	Hotprop® Prop De-Icer
		3E1964-3	Prop De-Ice Timer (14/28 Vdc - 34A - 2 Outputs - 20 Sec - Manual Step)
		3E2062-2	Modular Brush Assembly
		4E2972	Slip Ring Assembly
A36,A36TC	Hartzell HC-B3TF-7A	4E3048-10	Prop De-Icer Thermal Efficient
		3E2507-1	Wire Harness Assembly (2-Wire - 12.76"L - Molded End)
		3E1899-1	Prop De-Ice Timer (14/28 Vdc - 34A - 90 On/90 Off - Immediate On)
		3E2062-2	Modular Brush Assembly
A36,B36TC	Hartzell PHC-3CYF-1RF	4E2200-2	Hotprop® Prop De-Icer
		3E1964-3	Prop De-Ice Timer (14/28 Vdc - 34A - 2 Outputs - 20 Sec - Manual Step)
		3E2062-2	Modular Brush Assembly
		4E2267-1	Slip Ring Assembly
E50, F50, G50, H50, 65	Hartzell HC-B3T/B3Z	4E1270	Prop De-Icer
		3E1150-10	Prop De-Ice Timer (14/28 Vdc - 34 Amp - 4 Outputs - 34 Sec)
		4E1283/3E2044-1	Modular Brush Block Assembly
		4E1282/4E1424-1	Slip Ring Assembly

Prop De-Icers and Hardware Kits

BEECH (CONTINUED)

AIRCRAFT MODEL	BLADE	PART NUMBER	DESCRIPTION
E50, F50, J50, J65, 65-80, 65-88	Hartzell HC-B3T/B3Z	4E1188-3	Dual Element Prop De-Icer
		3E1150-10	Prop De-Ice Timer (14/28 Vdc - 34 Amp - 4 Outputs - 34 Sec)
		3E2044-4	Brush Block Asssemblies - Modular
		4E1287-2	Slip Ring Assembly
		4E2200-3	Hotprop® Prop De-Icer
		3E1964-3	Prop De-Ice Timer (14/28 Vdc - 34A - 2 Outputs - 20 Sec - Manual Step)
B55, E55	Hartzell BHC-C2YF-2C	4E1188-3	Dual Element Prop De-Icer
		3E1150-10	Prop De-Ice Timer (14/28 Vdc - 34 Amp - 4 Outputs - 34 Sec)
		3E2042-1	Modular Brush Block Assembly
		4E1923-1	Slip Ring & Holder Assembly
		4E2271-10	Hotprop® Prop De-Icer
		3E2094-2/6956	Wire Harness Assembly (2 Wire - 18.031"L - Molded End)
		3E1964-3	Prop De-Ice Timer (14/28 Vdc - 34A - 2 Outputs - 20 Sec - Manual Step)
	Hartzell PHC-C3YR-2	4E1188-3	Dual Element Prop De-Icer
		3E1150-10	Prop De-Ice Timer (14/28 Vdc - 34 Amp - 4 Outputs - 34 Sec)
		3E2042-1	Modular Brush Block Assembly
		4E1924-1	Slip Ring Assembly
		4E2271-10	Hotprop® Prop De-Icer
		3E2094-1/6955	Wire Harness Assembly (2 Wire - 14.969"L - Molded End)
		3E1964-3	Prop De-Ice Timer (14/28 Vdc - 34A - 2 Outputs - 20 Sec - Manual Step)
	Hartzell CHC-C2YF-2C	4E1601-7	Dual Element Prop De-Icer
		4E1967-5/6966	Wire Harness (3 Wire - 18"L)
		3E1150-10	Prop De-Ice Timer (14/28 Vdc - 34 Amp - 4 Outputs - 34 Sec)
		3E2042-1	Modular Brush Block Assembly
		4E1923-1	Slip Ring & Holder Assembly
		4E2271-10	Hotprop® Prop De-Icer
		3E2094-2/6956	Wire Harness Assembly (2 Wire - 18.031"L - Molded End)
		3E1964-3	Prop De-Ice Timer (14/28 Vdc - 34A - 2 Outputs - 20 Sec - Manual Step)
B55, E55	Hartzell PHC-C3YF-2	4E1601-7	Dual Element Prop De-Icer
		4E1967-4/6965	Wire Harness Assembly (2 Wire - 14.969"L - Molded End)

Prop De-Icers and Hardware Kits

BEECH (CONTINUED)

AIRCRAFT MODEL	BLADE	PART NUMBER	DESCRIPTION
B55, E55	Hartzell PHC-C3YF-2	3E1150-10	Prop De-Ice Timer (14/28 Vdc - 34 Amp - 4 Outputs - 34 Sec)
		3E2042-1	Modular Brush Block Assembly
		4E1924-1	Slip Ring Assembly
		4E2271-10	Hotprop® Prop De-Icer
		3E2094-1/6955	Wire Harness Assembly (2 Wire - 14.969"L - Molded End)
		3E1964-3	Prop De-Ice Timer (14/28 Vdc - 34A - 2 Outputs - 20 Sec - Manual Step)
B55,E55 no air conditioning	Hartzell BHC-C2YF-2C	4E2271-10	Hotprop® Prop De-Icer
		3E2050-2/6961	Wire Harness Assembly (2 Wire - 17.062"L - Molded End)
		3E1964-3	Prop De-Ice Timer (14/28 Vdc - 34A - 2 Outputs - 20 Sec - Manual Step)
		3E2062-2	Modular Brush Assembly
		4E2440	Slip Ring Assembly
	Hartzell PHC-C3YF	4E2271-10	Hotprop® Prop De-Icer
		3E2050/6960	Wire Harness Assembly (2 Wire - 14"L - Molded End)
		3E1964-3	Prop De-Ice Timer (14/28 Vdc - 34A - 2 Outputs - 20 Sec - Manual Step)
		3E2062-2	Modular Brush Assembly
		4E2446	Slip Ring Assembly
C55	McCauley 2AF-36C39/2AF34/C55	4E1188-3	Dual Element Prop De-Icer
		3E1150-12	Prop De-Ice Timer (14/28 Vdc - 34 Amp - 4 Outputs - 34 Sec)
		3E2042-1/3E2042-2	Modular Brush Block Assembly
		4E1494	Slip Ring Assembly
E55,58	Hartzell PHC-J3YF-2	4E2271-10	Hotprop® Prop De-Icer
		3E2050/6960	Wire Harness Assembly (2 Wire - 14"L - Molded End)
		3E1964-3	Prop De-Ice Timer (14/28 Vdc - 34A - 2 Outputs - 20 Sec - Manual Step)
		3E2071	Modular Brush Assembly
		4E2375-1/4E2377-1	Slip Ring Assembly
	Hartzell BHC-J2YF-2	4E2271-10	Hotprop® Prop De-Icer
		3E2050-2/6961	Wire Harness Assembly (2 Wire - 17.062"L - Molded End)
		3E1964-3	Prop De-Ice Timer (14/28 Vdc - 34A - 2 Outputs - 20 Sec - Manual Step)
		3E2071	Modular Brush Assembly
		4E2371/4E2373	Slip Ring Assembly
56TC,60	Hartzell HC-F3YR-2	4E1188-3	Dual Element Prop De-Icer

Prop De-Icers and Hardware Kits

BEECH (CONTINUED)

AIRCRAFT MODEL	BLADE	PART NUMBER	DESCRIPTION
56TC, 60	Hartzell HC-F3YR-2	3E1150-10	Prop De-Ice Timer (14/28 Vdc - 34 Amp - 4 Outputs - 34 Sec)
		4E1633	Mounting Plate & Brush Block Assembly
		4E1637-2	Starter Ring Gear Assembly
		4E2271-10	Hotprop® Prop De-Icer
		3E2094-1/6955	Wire Harness Assembly (2 Wire - 14.969"L - Molded End)
		3E1964-1	Prop De-Ice Timer (14/28 Vdc - 34A - 2 Outputs - 34 Sec - Manual Step)
	Hartzell HC-F3YR-2	4E1601-7	Dual Element Prop De-Icer
		4E1967-4/6965	Wire Harness (3 Wire - 15"L)
		3E1150-10	Prop De-Ice Timer (14/28 Vdc - 34 Amp - 4 Outputs - 34 Sec)
		4E1633	Mounting Plate & Brush Block Assembly
		4E1637-2	Starter Ring Gear Assembly
		4E2271-10	Hotprop® Prop De-Icer
		3E2094-1/6955	Wire Harness Assembly (2 Wire - 14.969"L - Molded End)
		3E1964-3	Prop De-Ice Timer (14/28 Vdc - 34A - 2 Outputs - 20 Sec - Manual Step)
	Harzell HC-F2YR-2	4E1188-3	Dual Element Prop De-Icer
		3E1150-10	Prop De-Ice Timer (14/28 Vdc - 34 Amp - 4 Outputs - 34 Sec)
		4E1633	Mounting Plate & Brush Block Assembly
58	Hartzell HC-J2YF-2C	4E1188-3	Dual Element Prop De-Icer
		3E1150-10	Prop De-Ice Timer (14/28 Vdc - 34 Amp - 4 Outputs - 34 Sec)
		3E2046-1	Modular Brush Block Assembly
		4E1918-1	Slip Ring Assembly
	Hartzell PHC-3YF-2	4E1188-3	Dual Element Prop De-Icer
		3E1150-10	Prop De-Ice Timer (14/28 Vdc - 34 Amp - 4 Outputs - 34 Sec)
		3E2046-1	Modular Brush Block Assembly
		4E1926-1	Slip Ring Assembly
	Hartzell BHC-J2YF-2C	4E1601-7/-10	Dual Element Prop De-Icer
	Hartzell BHC-J2YF-2C	4E1967-5/6966	Wire Harness (3 Wire - 18"L)
		4E1967-3	Wire Harness (3 Wire - 18"L), for 4E1601-7
		3E1150-10	Prop De-Ice Timer (14/28 Vdc - 34 Amp - 4 Outputs - 34 Sec)
		3E2046-3	Modular Brush Block Assembly
		4E1918-1	Slip Ring Assembly Left and Right Prop Air Conditioning : Right Prop No Air Conditioning
		4E2087	Slip Ring Assembly Left Prop Air Conditioning

Prop De-Icers and Hardware Kits

BEECH (CONTINUED)

AIRCRAFT MODEL	BLADE	PART NUMBER	DESCRIPTION
58	Hartzell BHC-J2YF-2C	4E1601-7/-10	Dual Element Prop De-Icer
		4E1967-5/6966	Wire Harness (3 Wire - 18"L)
		4E1967-3	Wire Harness (3 Wire - 18"L), for 4E1601-7
		3E1150-10	Prop De-Ice Timer (14/28 Vdc - 34 Amp - 4 Outputs - 34 Sec)
		3E2046-3	Modular Brush Block Assembly
		4E1918-1	Slip Ring Assembly Left and Right Prop Air Conditioning : Right Prop No Air Conditioning
		4E2087	Slip Ring Assembly Left Prop Air Conditioning
		4E2271-10	Hotprop® Prop De-Icer
		3E2094-2/6956	Wire Harness Assembly (2 Wire - 18.031"L - Molded End)
		3E1964-3	Prop De-Ice Timer (14/28 Vdc - 34A - 2 Outputs - 20 Sec - Manual Step)
	Hartzell HC-J3YF-2UF	4E1601-7/-10	Dual Element Prop De-Icer
		4E1967-4/6968	Wire Harness (3 Wires - 15"L)
		4E1967-3	Wire Harness (3 Wire - 18"L), for 4E1601-7
		3E1150-10	Prop De-Ice Timer (14/28 Vdc - 34 Amp - 4 Outputs - 34 Sec)
		3E2046-3	Modular Brush Block Assembly
		4E1926-1	Slip Ring Assembly Left and Right Prop No Air Conditioning : Right Prop Air Conditioning
		4E2155	Slip Ring Assembly Left Prop Air Conditioning
		4E2271-10	Hotprop® Prop De-Icer
		3E2094-1/6955	Wire Harness Assembly (2 Wire - 14.969"L - Molded End)
		3E1964-3	Prop De-Ice Timer (14/28 Vdc - 34A - 2 Outputs - 20 Sec - Manual Step)
	Hartzell PHC-J3YF-2UF	4E2271-13	Hotprop® Prop De-Icer
		3E2050	Wire Harness (13.94"L)
		3E1964-3	Prop De-Ice Timer (14/28 Vdc - 34A - 2 Outputs - 20 Sec - Manual Step)
		3E2071	Modular Brush Assembly
		4E3422-1/4E2377-1	Slip Ring Assembly
	McCauley D3AF32C35	4E1188-3	Dual Element Prop De-Icer
		3E1150-10	Prop De-Ice Timer (14/28 Vdc - 34 Amp - 4 Outputs - 34 Sec)
		3E2046-3	Modular Brush Block Assembly
		4E1882-1	Slip Ring Assembly
60	Hartzell HC-F3YR-2	4E2271-10	Hotprop® Prop De-Icer
		3E2050/6960	Wire Harness Assembly (2 Wire - 14"L - Molded End)

Prop De-Icers and Hardware Kits

BEECH (CONTINUED)

AIRCRAFT MODEL	BLADE	PART NUMBER	DESCRIPTION
60	Hartzell HC-F3YR-2	3E1964-3	Prop De-Ice Timer (14/28 Vdc - 34A - 2 Outputs - 20 Sec - Manual Step)
		3E2151	Brush Assembly
		5E1934	Slip Ring Assembly
65, 65-80, 65-A80-8800, 65-B80, 65-88, A65, 70	Hartzell HC-A3VK-2A	4E1188-4	Dual Element Prop De-Icer
		3E1150-10	Prop De-Ice Timer (14/28 Vdc - 34 Amp - 4 Outputs - 34 Sec)
		3E2046-1	Modular Brush Block Assembly
		5E1583-1	Slip Ring Assembly
65-90	Hartzell HC-B3TN-2	4E1188-3	Dual Element Prop De-Icer
		3E1150-10	Prop De-Ice Timer (14/28 Vdc - 34 Amp - 4 Outputs - 34 Sec)
		3E2042-1	Modular Brush Block Assembly
		4E1454	Slip Ring Assembly
		4E2200-10	Hotprop® Prop De-Icer
		3E2092-3/6887	Wire Harness Assembly (3 Wire - 14.75"L - Molded End)
		3E1964-3	Prop De-Ice Timer (14/28 Vdc - 34A - 2 Outputs - 20 Sec - Manual Step)
65-90,99,100	Hartzell HC-B3TN-3	4E1188-3/-4	Dual Element Prop De-Icer
		3E1150-10	Prop De-Ice Timer (14/28 Vdc - 34 Amp - 4 Outputs - 34 Sec)
		3E2044-1	Modular Brush Block Assembly
		4E1555-1	Slip Ring Assembly Left and Right Prop, No Target Screws
		4E1555-2	Slip Ring Assembly Left Prop Target Screws (master), used with 4E1555-3
		4E1555-3	Slip Ring Assembly Right Prop Target Screws (Slave), used with 4E1555-2
		4E2200-10	Hotprop® Prop De-Icer
		3E2092-2/6887	Wire Harness Assembly (3 Wire - 14.75"L - Molded End)
		3E1964-3	Prop De-Ice Timer (14/28 Vdc - 34A - 2 Outputs - 20 Sec - Manual Step)
65-90, 99, 100, 200	Hartzell HC-B3TN-3	4E1188-5	Dual Element Prop De-Icer
		4E1889-2/7021	Wire Harness (3 Wire - 12.75"L)
		3E1150-10	Prop De-Ice Timer (14/28 Vdc - 34 Amp - 4 Outputs - 34 Sec)
		3E2044-1	Modular Brush Block Assembly
		4E1555-1	Slip Ring Assembly Left and Right Prop, No Target Screws
		4E1555-2	Slip Ring Assembly Left Prop Target Screws (master), used with 4E1555-3
		4E1555-3	Slip Ring Assembly Right Prop Target Screws (Slave), used with 4E1555-2

Prop De-Icers and Hardware Kits

BEECH (CONTINUED)

AIRCRAFT MODEL	BLADE	PART NUMBER	DESCRIPTION
65-90, 99, 100, 200	Hartzell HC-B3TN-3	4E2200-10	Hotprop® Prop De-Icer
		3E2092-2/6887	Wire Harness Assembly (3 Wire - 14.75"L - Molded End)
		3E1964-3	Prop De-Ice Timer (14/28 Vdc - 34A - 2 Outputs - 20 Sec - Manual Step)
90, 99, 200	Hartzell HC-B3TN-3	4E2200-10	Hotprop® Prop De-Icer
		3E2092-2/6887	Wire Harness Assembly (3 Wire - 14.75"L - Molded End)
		3E1964-3	Prop De-Ice Timer (14/28 Vdc - 34A - 2 Outputs - 20 Sec - Manual Step)
		3E2090-1	Modular Brush Assembly
		4E2442-1	Slip Ring Assembly
B90, C90, C90A, E90, 65-A90, 100, A100, 200 series	Hartzell HC-D4N-3A	4E2271-10	Hotprop® Prop De-Icer
		3E2092-4/6834	Wire Harness Assembly (Two Wires - 17.625"L - Molded End)
		3E2090-1	Modular Brush Assembly
		4E2674-2	Slip Ring Assembly
C90A	Hartzell HC-E4N-3N	4E2271-10	Hotprop® Prop De-Icer
		3E2092-4	Wire Harness - Molded (Two Wires)
		3E1964-3	Prop De-Ice Timer (14/28 Vdc - 34A - 2 Outputs - 20 Sec - Manual Step)
		3E2090-1	Modular Brush Assembly
		4E2674-2	Slip Ring Assembly
F90,A100	Hartzell HC-B4TN-3	4E2200-10	Hotprop® Prop De-Icer
		3E2092-3/6952	Wire Harness Assembly (2 Wire - 14.312"L - Molded End)
		3E1964-3	Prop De-Ice Timer (14/28 Vdc - 34A - 2 Outputs - 20 Sec - Manual Step)
		3E2090-1	Modular Brush Assembly
		4E2444-1	Slip Ring Assembly
	Hartzell HC-B4TN-3	4E1188-5	Dual Element Prop De-Icer
		4E1889-3/6959	Wire Harness (3 Wire - 12.406"L)
		3E1150-10	Prop De-Ice Timer (14/28 Vdc - 34 Amp - 4 Outputs - 34 Sec)
		3E2044-1	Modular Brush Block Assembly
		4E1676-1	Slip Ring Assembly No Target Screws
		4E1676-2	Slip Ring Assembly Left Prop Target Screws
		4E1676-3	Slip Ring Assembly Right Prop Target Screws
		4E2200-10	Hotprop® Prop De-Icer
		3E2092-3/6952	Wire Harness Assembly (2 Wire - 14.312"L - Molded End)
		3E1964-3	Prop De-Ice Timer (14/28 Vdc - 34A - 2 Outputs - 20 Sec - Manual Step)

Prop De-Icers and Hardware Kits

BEECH (CONTINUED)

AIRCRAFT MODEL	BLADE	PART NUMBER	DESCRIPTION
95	Hartzell	4E1188-1	Dual Element Prop De-Icer
		3E1150-10	Prop De-Ice Timer (14/28 Vdc - 34 Amp - 4 Outputs - 34 Sec)
		4E1213	Brush Insert Assembly
95-55, 95-A55, 95-B55	Hartzell HC-A3MVF-2B	4E1188-3	Dual Element Prop De-Icer
		3E1150-10	Prop De-Ice Timer (14/28 Vdc - 34 Amp - 4 Outputs - 34 Sec)
		4E1474	Slip Ring Assembly
95-C55, 95-C55A	McCauley 3AF32C75	4E1188-3	Dual Element Prop De-Icer
		3E1150-10	Prop De-Ice Timer (14/28 Vdc - 34 Amp - 4 Outputs - 34 Sec)
		3E2042-1	Modular Brush Block Assembly
		4E1474	Slip Ring Assembly
B100	Hartzell HC-B4TN-5C/F	4E1188-5	Dual Element Prop De-Icer
		4E1889-2/7021	Wire Harness (3 Wire - 12.75"L)
		3E1150-10	Prop De-Ice Timer (14/28 Vdc - 34 Amp - 4 Outputs - 34 Sec)
		3E2042-1	Modular Brush Block Assembly
		4E1933-5/-8	Slip Ring Assembly
		4E1933-5/-8	Slip Ring Assembly Can Replace 4E1933-2/-3/-4/-5 and 4E1934 (Spacer Ring) Combp
		4E2200-10	Hotprop® Prop De-Icer
		3E2092-3/6952	Wire Harness Assembly (2 Wire - 14.312"L - Molded End)
		3E1964-3	Prop De-Ice Timer (14/28 Vdc - 34A - 2 Outputs - 20 Sec - Manual Step)
		4E2200-10	Hotprop® Prop De-Icer
		3E2092-6/6954	Wire Harness Assembly (2 Wire- 13"L - Molded End)
		3E1964-3	Prop De-Ice Timer (14/28 Vdc - 34A - 2 Outputs - 20 Sec - Manual Step)
		3E2062-2	Modular Brush Assembly
200	Hartzell HC-E4N-3G	4E2271-10	Hotprop® Prop De-Icer
		3E2092-4	Wire Harness Assembly - (2-Wire - 17.56"L - Molded End)
		3E1964-3	Prop De-Ice Timer (14/28 Vdc - 34A - 2 Outputs - 20 Sec - Manual Step)
		3E2090-1	Modular Brush Assembly
		4E2674-2	Slip Ring Assembly

Prop De-Icers and Hardware Kits

BEECH (CONTINUED)

AIRCRAFT MODEL	BLADE	PART NUMBER	DESCRIPTION
300 T-6	Hartzell HC-E4A-2A	4E2271-14	Propeller De-Icer Assembly
		3E2360-5	Wire Harness (Molded - 2 Wire - 21.25"L - Plug End)
		3E2205-4	Prop De-Ice Timer (28 Vdc - 50A - 90 On / 90 Off - Immediate On)
		4E3196-1	Heavy Duty Brush Block Assembly
		4E4015-1	Slip Ring Assembly
300,350	Hartzell HC-B4MP-3	4E2575-7	Hotprop® Prop De-Icer
		D4E2575-7	DuraTherm® Prop De-Icer
		3E2017-8/6951	Wire Harness (2 Wire - 17.187"L)
		3E1964-3	Prop De-Ice Timer (14/28 Vdc - 34A - 2 Outputs - 20 Sec - Manual Step)
		3E2090-1	Modular Brush Assembly
		4E2444-1	Slip Ring Assembly
		4E2575-10	Hotprop® Prop De-Icer
		D4E2575-10	DuraTherm® Prop De-Icer
		3E2092-2	Wire Harness (2 Wire - 17.187"L)
		3E1964-3	Prop De-Ice Timer (14/28 Vdc - 34A - 2 Outputs - 20 Sec - Manual Step)
		3E2090-1	Modular Brush Assembly
		4E2444-1	Slip Ring Assembly
1900	Hartzell HC-B4MP-3	4E2560-10	Hotprop® Prop De-Icer
		D4E2560-10	DuraTherm® Prop De-Icer
		3E2092-2/6887	Wire Harness Assembly (3 Wire - 14.75"L - Molded End)
		3E1964-3	Prop De-Ice Timer (14/28 Vdc - 34A - 2 Outputs - 20 Sec - Manual Step)
		3E2090-3/4E3197-1	Heavy Duty Brush Block Assembly
		4E2624-1/4E3099-1	Slip Ring Assembly
1900D	Hartzell HC-E4A-3	4E3400-1	Hotprop® Prop De-Icer
		D4E3400-1	DuraTherm® Prop De-Icer
		3E2526-1	Wire Harness Assembly (2-Wire - 13.13"L)
		3E1964-3	Prop De-Ice Timer (14/28 Vdc - 34A - 2 Outputs - 20 Sec - Manual Step)
		3E2510-3/4E3196-1	Heavy Duty Brush Block Assembly
		4E2955-1/4E3094-1	Heavy Duty Slip Ring Assembly
		4E3017-1	Hotprop® Prop De-Icer
		3E2526-1	Wire Harness Assembly (2-Wire - 13.13"L)
		3E1964-3	Prop De-Ice Timer (14/28 Vdc - 34A - 2 Outputs - 20 Sec - Manual Step)
		3E2510-3/4E3196-1	Heavy Duty Brush Block Assembly
		4E2955-1/4E3094-1	Heavy Duty Slip Ring Assembly
65-88		4E1601-4	Dual Element Prop De-Icer
D18C, D18S, E18S-9700, C-45G, C-45H, TC-45G, TC-45H, TC-45J	Hartzell HC-B3TN-5C	6975-11	Quick Disconnect Prop De-Icer Kit

Prop De-Icers and Hardware Kits

BEECH (CONTINUED)

AIRCRAFT MODEL	BLADE	PART NUMBER	DESCRIPTION
T-34C T-34C	Hartzell HC-B3TN-3H	6975-11	Quick Disconnect Prop De-Icer Kit
		6976-11	Quick Disconnect Wire Harness Assembly (3-Wire - 14.05"L)
65-90, 65-A90, 65-A90-1, 65-A90-2, 65-A90-3, 65-A90-4	Hartzell HC-B3TN-3B/-3M/-2B	6975-11	Quick Disconnect Prop De-Icer Kit
		6976-11	Quick Disconnect Wire Harness Assembly (3-Wire - 14.05"L)
B90,C90,E90,H90	Hartzell HC-B3TN-3B/-3M	6975-11	Quick Disconnect Prop De-Icer Kit
		6976-11	Quick Disconnect Wire Harness Assembly (3-Wire - 14.05"L)
F90	Hartzell HC-B4TN-3A/-3B	6975-11	Quick Disconnect Prop De-Icer Kit
		6976-11	Quick Disconnect Wire Harness Assembly (3-Wire - 14.05"L)
99,99A,A99,A99A	Hartzell HC-B3TN-3B	6975-11	Quick Disconnect Prop De-Icer Kit
		6976-11	Quick Disconnect Wire Harness Assembly (3-Wire - 14.05"L)
C99,100	Hartzell HC-B3TN-3B/-3M	6975-11	Quick Disconnect Prop De-Icer Kit
		6976-11	Quick Disconnect Wire Harness Assembly (3-Wire - 14.05"L)
A100, A100A, A100-1	Hartzell HC-B4TN-3/-3A	6975-11	Quick Disconnect Prop De-Icer Kit
		6976-11	Quick Disconnect Wire Harness Assembly (3-Wire - 14.05"L)
200, 200C, 200CT, 200T, A200, A200C, A200CT, B200, 200C, B200CT, B200T	Hartzell HC-B3TN-3G/-3N	6975-11	Quick Disconnect Prop De-Icer Kit
		6976-11	Quick Disconnect Wire Harness Assembly (3-Wire - 14.05"L)
B100	Hartzell HC-B4TN-5C/5F	6975-11	Quick Disconnect Prop De-Icer Kit
		6976-11	Quick Disconnect Wire Harness Assembly (3-Wire - 14.05"L)
JRB-6	Hartzell HC-B3TN-5C	6975-11	Quick Disconnect Prop De-Icer Kit
		6976-11	Quick Disconnect Wire Harness Assembly (3-Wire - 14.05"L)
65-90 series B90,C90,E90,F90,H90		4E2200-21	Hotprop® Prop De-Icer
		6887	Wire Harness Assembly (3 Wire - 14.75"L - Molded End)
200 series		4E2200-21	Hotprop® Prop De-Icer
		6887	Wire Harness Assembly (3 Wire - 14.75"L - Molded End)

Prop De-Icers and Hardware Kits

CESSNA

AIRCRAFT MODEL	BLADE	PART NUMBER	DESCRIPTION
TR-182	McCauley B2D34C214	4E2200-3	Hotprop® Prop De-Icer
		3E1899-1	Prop De-Ice Timer (14/28 Vdc - 34A - 90 On/90 Off - Immediate On)
		3E2071	Modular Brush Assembly
		5E1857-1	Slip Ring Assembly
206H, T206H, TU206G, U206G	Hartzel HC-C3YN-5A	4E2271-10	Hotprop® Prop De-Icer
		3E2050/6960	Wire Harness Assembly (2 Wire - 14"L - Molded End)
		3E1899-1	Prop De-Ice Timer (14/28 Vdc - 34A - 90 On/90 Off - Immediate On)
		3E2062-2	Modular Brush Assembly
		4E2761-1	Slip Ring Assembly
208	Hartzell HC-B3MN-3 Hartzel HC-B3TN-3AF/3AFY	4E2336-12	Hotprop® Prop De-Icer
		3E2092-2/6887	Wire Harness Assembly (3 Wire - 14.75"L - Molded End)
		3E2205-4	Prop De-Ice Timer (28 Vdc - 50A - 90 On / 90 Off - Immediate On)
		3E2090-1	Modular Brush Assembly
		4E2551-1	Slip Ring Assembly
		4E2560-10	Hotprop® Prop De-Icer
		D4E2560-10	DuraTherm® Prop De-Icer
		3E2092-2	Wire Harness Assembly - (2-Wire - 14.56"L - Molded End)
		3E2090-1	Modular Brush Assembly
		4E2551-1	Slip Ring Assembly
208, 208A, 208B	Hartzell HC-B3MN-3	4E2560-10	Hotprop® Prop De-Icer
		3E2092-2	Wire Harness Assembly - (2-Wire - 14.56"L - Molded End)
		3E2205-4	Prop De-Ice Timer (28 Vdc - 50A - 90 On / 90 Off - Immediate On)
		4E2551-1	Slip Ring Assembly
	Hartzell HC-D4N-3R	4E2560-10	Hotprop® Prop De-Icer
		D4E2560-10	DuraTherm® Prop De-Icer
		3E2092-2	Wire Harness Assembly - (2-Wire - 14.56"L - Molded End)
		3E2205-4	Prop De-Ice Timer (28 Vdc - 50A - 90 On / 90 Off - Immediate On)
		3E2090-1	Modular Brush Assembly
		4E2674-2	Slip Ring Assembly
210	McCauley E3A34C70	4E1214-3	Dual Element Prop De-Icer
		3E1964-1	Prop De-Ice Timer (14/28 Vdc - 34A - 2 Outputs - 34 Sec - Manual Step)
		3E2042-1	Modular Brush Block Assembly
		4E1708	Slip Ring Assembly

Prop De-Icers and Hardware Kits

CESSNA (CONTINUED)

AIRCRAFT MODEL	BLADE	PART NUMBER	DESCRIPTION
210	McCauley D3A32C88	4E1214-3	Dual Element Prop De-Icer
		3E1964-1	Prop De-Ice Timer (14/28 Vdc - 34A - 2 Outputs - 34 Sec - Manual Step)
		3E2042-1	Modular Brush Block Assembly
		4E1706	Slip Ring Assembly
	McCauley E2A34C70	4E1188-2	Dual Element Prop De-Icer
		3E1964-1	Prop De-Ice Timer (14/28 Vdc - 34A - 2 Outputs - 34 Sec - Manual Step)
		3E2042-1	Modular Brush Block Assembly
		4E1708	Slip Ring Assembly
	McCauley D3A32C88	4E1188-2	Dual Element Prop De-Icer
		3E1964-1	Prop De-Ice Timer (14/28 Vdc - 34A - 2 Outputs - 34 Sec - Manual Step)
		3E2042-1	Modular Brush Block Assembly
		4E1706	Slip Ring Assembly
210K, 210L, 210M, 210N	Hartzell PHC-J3YF-1RF	4E1188-7	Dual Element Prop De-Icer
		3E2205-1	Timer, Epd
		3E2042-2	Modular Brush Block Assembly
		4E2459-2	Slip Ring Assembly
P210N	Hartzell HC-B3TF-7A	4E3048-10	Prop De-Icer Thermal Efficient
		3E2507-1	Wire Harness Assembly (2-Wire - 12.76"L - Molded End)
		3E1899-1	Prop De-Ice Timer (14/28 Vdc - 34A - 90 On/90 Off - Immediate On)
		3E2062-2	Modular Brush Assembly
		4E2714-1	Slip Ring Assembly
310	Hartzell PHC-C3YF-2UF	4E1601-10	Dual Element Prop De-Icer (Left Rotation)
		4E1967-3	Wire Harness (3 Wires - 13.94"L)
		3E1150-10	Prop De-Ice Timer (14/28 Vdc - 34 Amp - 4 Outputs - 34 Sec)
		3E2042-1	Modular Brush Block Assembly
		4E1924-1	Slip Ring Assembly
	Hartzell PHC-J3YF-2UF	4E1601-10	Dual Element Prop De-Icer (Left Rotation)
		4E1967-3	Wire Harness (3 Wires - 13.94"L)
		3E1150-10	Prop De-Ice Timer (14/28 Vdc - 34 Amp - 4 Outputs - 34 Sec)
		3E2042-2	Modular Brush Block Assembly
		4E2459-2	Slip Ring Assembly
310 Thru 310H, 320	Hartzell HC-A2XF(VF/MVF)-2	4E1188-3	Dual Element Prop De-Icer
		3E1150-10	Prop De-Ice Timer (14/28 Vdc - 34 Amp - 4 Outputs - 34 Sec)
		4E1294	Brush Block
		4E1295-2	Slip Ring Assembly

Prop De-Icers and Hardware Kits

CESSNA (CONTINUED)

AIRCRAFT MODEL	BLADE	PART NUMBER	DESCRIPTION
T310P, T310Q, T310R, 320D, 320E, 320F, 340, 340A, 402C, 414, 414A	Hartzell PHC-C3YF-2UF	4E1601-14	Dual Element Prop De-Icer
		4E1967-3	Wire Harness (3 Wires - 13.94"L)
336, 337	McCauley D2AF34C300/301/59	4E1188-3	Dual Element Prop De-Icer
		3E1150-10	Prop De-Ice Timer (14/28 Vdc - 34 Amp - 4 Outputs - 34 Sec)
		3E2042-1	Modular Brush Block Assembly
		4E1575	Slip Ring Assembly Not Used With C300 Series Z Prop
		4E1974	Slip Ring Assembly C300 Series Z Prop
340, 340A	McCauley 3AF32C93	4E1601-10	Dual Element Prop De-Icer (Left Rotation)
		4E1967-3/6964	Wire Harness Assembly (3 Wire - 14"L - Molded End)
	Hartzell PHC-C3YF-2UF	4E1601-10	Dual Element Prop De-Icer (Left Rotation)
		4E1967-3/6964	Wire Harness Assembly (3 Wire - 14"L - Molded End)
402	Hartzell HC-B3TF-7	4E1188-3	Dual Element Prop De-Icer
		3E1150-10	Prop De-Ice Timer (14/28 Vdc - 34 Amp - 4 Outputs - 34 Sec)
		3E2042-1	Modular Brush Block Assembly
		4E1489	Slip Ring & Holder Assembly
		4E2200-10	Hotprop® Prop De-Icer
		3E2092-3/6952	Wire Harness Assembly (2 Wire - 14.312"L - Molded End)
		3E1964-3	Prop De-Ice Timer (14/28 Vdc - 34A - 2 Outputs - 20 Sec - Manual Step)
421C	Hartzell PHC-C3YN-2UF	4E1601-14	Dual Element Prop De-Icer
		4E1967-3	Wire Harness (3 Wires - 13.94"L)
425	Hartzell HC-B3TN-3	4E1188-6	Dual Element Prop De-Icer
		4E1889-7/6995	De-Icer Wire Harness (3 Wire - 14.062"L)
		3E1964-2	Prop De-Ice Timer (14/28 Vdc - 34A - 2 Outputs - 20 Sec - Manual Step)
		3E2044-1	Modular Brush Block Assembly
		4E1555-1	Slip Ring Assembly

Prop De-Icers and Hardware Kits

CESSNA (CONTINUED)

AIRCRAFT MODEL	BLADE	PART NUMBER	DESCRIPTION
441	Hartzell HC-B3TN-5E/M	4E1188-6	Dual Element Prop De-Icer
		4E1889-2/7021	Wire Harness (3 Wire - 12.75"L)
		3E1964-2	Prop De-Ice Timer (14/28 Vdc - 34A - 2 Outputs - 20 Sec - Manual Step)
		3E2044-2	Modular Brush Block Assembly
		4E1614-2	Slip Ring Assembly
		4E1614-3	Slip Ring Assembly Can Replace 4E1614-2/4E1689-3 (Spacer Ring) Combo
	Hartzell HC-E4N-5	4E2271-10	Hotprop® Prop De-Icer
		3E2092-4	Wire Harness Assembly - (2-Wire - 17.56"L - Molded End)
		3E1964-3	Prop De-Ice Timer (14/28 Vdc - 34A - 2 Outputs - 20 Sec - Manual Step)
		3E2090-2	Modular Brush Assy
		4E2674-1	Slip Ring Assembly
	Hartzell HC-B4TN-3	4E1188-5	Dual Element Prop De-Icer
		4E1889-2/7021	De-Icer Wire Harness (3 Wire - 12.75"L)
		3E1150-10	Prop De-Ice Timer (14/28 Vdc - 34 Amp - 4 Outputs - 34 Sec)
		3E2044-1	Modular Brush Block Assembly
		4E1676-1	Slip Ring, Base & Holder Assembly

Collins Aerospace 2020 World List Price Catalog

Collins Aerospace "On-Condition" Statement for Age-Sensitive Products

Goodrich Corporation Sensors and Integrated Systems (Formerly known as Deicing & Specialty Systems) manufacturers a number of age-sensitive products that cannot be stored indefinitely. Cements, coatings, edge sealers, and fillers that have been on the shelf for a period of time raise questions when it's time to use the product or make a purchasing decision. Factors such as storage conditions, opening and resealing the original container, and mixing cements can all affect shelf life of age-sensitive products. As a rule, any age-sensitive products should be used "on condition," regardless of age. The decision to use or not use the product rests with the user who must inspect each product on a case by case basis. To help users determine the age of Goodrich products, we stamp each with the date it was shipped from the Goodrich production facility.

Depending on the product, signs of degradation such as solidification, crystallization, separation, or changes in color can be indications that the product is not usable. Additionally, another important criteria for the use/don't use decision may be the policy and/or FAA guidelines affecting your operation. Users can also test the product before making a decision. For adhesives and accelerators, an adhesion test would be appropriate. For other types of products, apply a small sample of the product and observe if it spreads, dries, and appears as expected. Maximizing the shelf life of an age-sensitive product can be accomplished by strictly following instructions for product usage and storage. For example, once a product is opened but not all used, care should be taken not to contaminate the remaining product. The product should be tightly resealed and stored according to instructions. For products which require mixing (e.g., cement and accelerator), follow the specific guidelines for pot time, mixing only the amount needed for the job at hand.

Goodrich Age-Sensitive Products

Part Number	Unit of Measure	Alternate Designation	Description	Purpose	Visual Description of Material	Evidence of Degradation
74-451-11 74-451-11-1	1/2 pint 1 quart	A56B-R1	Conductive Edge Sealer	Seal neoprene pneumatic de-icer edges & minimize static pinhole damage.	Thin black liquid with sharp odor	A56-B –R1 - Check can for settled material that will not go back into solution on stirring and/or gelling of material. Gelling is indicated by material not exhibiting clean break on pouring or coming out in lumps. Material should be brushable, flow to fill in brush marks and dry to a tack free coating.
1300L	1 quart	1300L	Adhesive	Bond pneumatic and propeller de-icers to aircraft	Viscous yellow liquid, with sweet odor	1300L - Check for gelling of material. Gelling is indicated by material not exhibiting clean break on pouring or coming out in lumps. This material is viscous as received and may show some stringiness on pouring or brushing.
74-451-99	1 quart	Fuel Barrier Cement	Protective Cement	Protects against degradation of pneumatic de-icer bond over rivets on aircraft with fuel tanks under deicer	Light brown syrupy liquid with sweet pungent odor.	74-451-99 - Check can for settled material that will not go back into solution on stirring and/or gelling of material. Gelling is indicated by material not exhibiting clean break on pouring or coming out in lumps.
ICEX® II	1 quart Pump	ICEX® II	Ice Adhesion Inhibitor	Enhances performance of pneumatic and propeller deicers in icing conditions.	Clear liquid, low odor	ICEX® II - Check for gelling of material or material that comes out in lumps.
74-451-207	1/2 pint	PSA primer	*FASTboot™ Primer*	Activates PSA adhesive on bond side of *FASTboot™ pneumatic deicers.*	Clear/amber liquid with solvent odor	*FASTBoot™ primer - Look for signs of clouding and/or precipitation in bottom of container.*
74-451-AA Kit 74-451-206	2 ounces	PSA Primer	*FASTboot™ Primer*	Activates PSA adhesive on back of neoprene, Estane®, and silver Estane® patches	Clear amber liquid with solvent odor	*FASTboot™ - Check that pen tip is moist with primer. (Shake well prior to using. Seal pen well when done using.)*
74-451-AC Kit 74-451-150 75-451-194	1 fl. oz. 1 pint	A1343B 0165JC215	Accelerator Cement	Erosion protection for neoprene or Estane® pneumatic de-icers (approved for certain aircraft models only)	Dark amber to light yellow liquid, free of crystals Black liquid with ketone odor	A1343B - Look for crystallization of material into hard film on top of container and cloudiness or precipitation in container. Liquid material under thin skin on top is usable material if no cloudiness or precipitation. 0165JC215 - Check can for settled material that will not go back into solution on stirring and/or gelling of material. Gelling is indicated by material not exhibiting clean break on pouring or coming out in lumps. Material should be brushable, flow to fill in brush marks and dry to a tack free coating.
74-451-AE Kit 74-451-201 74-451-209	8.5 grams 24 ct., 4 gm pouches	A1343B 0165TS42	Accelerator Repair Material	Repair 1/16" or smaller pinholes on neoprene or Estane® pneumatic de-icers.	Dark amber to light yellow liquid, free of crystals Thick black paste/liquid with ketene odor	A1343B - Look for crystallization of material into hard film on top of container and cloudiness or precipitation in container. Liquid material under thin skin on top is usable material if no cloudiness or precipitation. 0165TS42 - Check for thick material that is spreadable.

Headline

Collins Aerospace 2020 World List Price Catalog

Goodrich Age-Sensitive Products (continued):

Part Number	Unit of Measure	Alternate Designation	Description	Purpose	Visual Description of Material	Evidence of Degradation
74-451-AG Kit						
74-451-151	8 ounces	0165TS39	Silver Cement	Bond silver urethane stall bar to silver Estane® pneumatic de-icer	Silver colored liquid, ketone odor	0165TS39 - Check can for settled material that will not go back into solution on stirring and/or gelling of material. Gelling is indicated by material not exhibiting clean break on pouring or coming out in lumps. Material should be brushable, flow to fill in brush marks and dry to a tack free coating.
74-451-152	1/2 ounce	KE7005	Accelerator		Thin dark amber to light yellow liquid, free of crystals, ketone odor	KE7005 - Look for crystallization of material into hard pieces, cloudiness or precipitation in container. Liquid material under hard surface film will be less concentrated and not usable.
74-451-K Kit						
74-451-117-1	1 quart	KE7804	Estane® Sealer	Seal Estane® pneumatic de-icer edges & minimize static pinhole damage	Black colored liquid, solvent odor	KE7804 - Check can for settled material that will not go back into solution on stirring and/or gelling of material. Gelling is indicated by material not exhibiting clean break on pouring or coming out in lumps. Material should be brushable, flow to fill in brush marks and dry to a tack free coating.
74-451-120	4 ounces	KE7005	Accelerator		Thin dark amber to light yellow liquid, free of crystals, ketone odor	KE7005 - Look for crystallization of material into hard pieces, cloudiness or precipitation in container. Liquid material under hard surface film will be less concentrated and not usable.
74-451-L Kit						
74-451-120	4 ounces	KE7005	Accelerator		Thin dark amber to light yellow liquid, free of crystals, ketone odor	KE7005 - Look for crystallization of material into hard pieces, cloudiness or precipitation in container. Liquid material under hard surface film will be less concentrated and not usable.
74-451-122	1 quart	21045	Primer	Resurface neoprene or Estane® pneumatic de-icers and/or provide diester oil protection	Black liquid, ketone odor	021045- Check can for settled material that will not go back into solution on stirring and/or gelling of material. Gelling is indicated by material not exhibiting clean break on pouring or coming out in lumps. Material should be brushable, flow to fill in brush marks and dry to a tack free coating.
74-451-123	1 quart	0165CP9	Coating		Black liquid, ketone odor	0165CP9 - Check can for settled material that will not go back into solution on stirring and/or gelling of material. Gelling is indicated by material not exhibiting clean break on pouring or coming out in lumps. Material should be brushable, flow to fill in brush marks and dry to a tack free coating.
74-451-P Kit						
74-451-220	1 pint	LA 5102	Cement	Heavy duty tape edge sealer for neoprene or Estane® pneumatic de-icers	Syrup like liquid clear to slight cloudy liquid, solvent odor	LA5102 - Check can for settled material that will not go back into solution on stirring and/or gelling of material. Gelling is indicated by material not exhibiting clean break on pouring or coming out in lumps. Material should be brushable, flow to fill in brush marks and dry to a tack free coating.
74-451-185	1 pint	Thixon P-6-EF	Primer		Thin gray liquid, solvent odor	Thixon P6-EF - Look for settled ingredients that will not go back into solution on stirring and/or gelling of material. Gelling is indicated by material not exhibiting clean break on pouring or coming out in lumps.
74-451-221	1 ounce	CAT UR	Accelerator		Dark amber to light yellow liquid, free of crystals	Cat UR - Look for crystallization of material into hard film on top of container and cloudiness or precipitation in container. Liquid material under skin on top is usable material if no cloudiness or precipitation.
74-451-Q-1 Kit						
74-451-158	1 pint	0165TS38, Part A	Silver Gap Filler - Part A	Fair full thickness silver Estane® de-icer cut-outs & edges to air foil structure	Silver colored, viscous liquid, no odor	0165TS38 Part A - Look for crystallization of material into hard pieces Liquid material under hard surface film will be less concentrated and not usable.
74-451-159	1/2 pint	0165TS38, Part B	Silver Gap Filler - Part B		Silver colored paste, amine odor	0165TS38 Part B -Check for smooth pourable liquid/ paste without gel.

Collins Aerospace 2020 World List Price Catalog

Goodrich Age-Sensitive Products (continued):

Part Number	Unit of Measure	Alternate Designation	Description	Purpose	Visual Description of Material	Evidence of Degradation
74-451-Q-2 Kit						
74-451-160	1 quart	0165TS38, Part A	Silver Gap Filler - Part A	Fair full thickness silver Estane® de-icer cut-outs & edges to air foil structure	Silver colored, viscous liquid, no odor	0165TS38 Part A - Look for crystallization of material into hard pieces Liquid material under hard surface film will be less concentrated and not usable.
74-451-161	1 pint	0165TS38, Part B	Silver Gap Filler - Part B		Silver colored paste, amine odor	0165TS38 Part B -Check for smooth pourable liquid/ paste without gel.
74-451-R-1 Kit						
74-451-169-2	1 pint	0165RR26	Silver Edge Sealer	Seal edges of silver Estane® pneumatic deicers	Thin silver liquid with peppermint odor	0165RR26 - Check can for settled material that will not go back into solution on stirring and/or gelling of material. Gelling is indicated by material not exhibiting clean break on pouring or coming out in lumps. Material should be brushable, flow to fill in brush marks and dry to a tack free coating.
74-451-143	2 ct., 1/2 oz. containers	KE7005	Accelerator		Thin dark amber to light yellow liquid, free of crystals, ketone odor	KE7005 - Look for crystallization of material into hard pieces, cloudiness or precipitation in container. Liquid material under hard surface film will be less concentrated and not usable.
74-451-R-2 Kit						
74-451-169-1	1 quart	0165RR26	Silver Edge Sealer	Seal edges of silver Estane® pneumatic deicers	Thin silver liquid with peppermint odor	0165RR26 - Check can for settled material that will not go back into solution on stirring and/or gelling of material. Gelling is indicated by material not exhibiting clean break on pouring or coming out in lumps. Material should be brushable, flow to fill in brush marks and dry to a tack free coating.
74-451-152	2 oz. containers	KE7005	Accelerator		Thin dark amber to light yellow liquid, free of crystals, ketone odor	KE7005 - Look for crystallization of material into hard pieces, cloudiness or precipitation in container. Liquid material under hard surface film will be less concentrated and not usable.
74-451-S-1						
74-451-206	2 ounces	PSA Primer	***FASTboot™*** *primer*	Activates PSA adhesive on back of neoprene, Estane®, and silver patches	Amber liquid with solvent odor	Pen tip is moist with primer. Shake well prior to using. Seal pen well when done using.
74-451-S-2 Kit						
74-451-156	8 ounce	0165JC51	Silver Surface spray	Resurface silver Estane® pneumatic de-icers	Thin silver liquid with sharp odor	0165JC51 - Check can for settled material that will not go back into solution on stirring and/or gelling of material. Gelling is indicated by material not exhibiting clean break on pouring or coming out in lumps. Material should be brushable, flow to fill in brush marks and dry to a tack free coating.
74-451-157	Jet spray pack	Jet Pack Spray Kit	Propellant		Clear odorless gas	Jet Pack - Aerosol spray - Can needs sufficient pressure to spray 0165JC51 material.
74-451-Z-Kit						
74-451-127	1 quart	AgeMaster No. 1	De-Icer Preservative	Deicer Care	Dark red-brown liquid	AgeMaster No. 1 - Check for settled material at the bottom of the can that will not go back into solution.
74-451-139	16 ox. Pump	ICEX® II	Ice Adhesion Inhibitor		Clear Liquid, slight amine odor	ICEX® II - Check for gelling of material or material that comes out in lumps.
74-451-178	1 pint	ShineMaster™	Cosmetic Treatment		Milky liquid, slight odor	ShineMaster™ - Check for settled material at the bottom of the can that will not go back into solution.
74-451-179	1 quart	ShineMaster™ Prep	Cleaner		Clear thick liquid, ammonia odor	ShineMaster™ Prep - Check for ammonia order.
77-798						
82-076-1	6 ounces	F63B12	Sealer	Edge seal for propeller deicers	Black liquid with solvent odor	F63B12 - Check can for settled material that will not go back into solution on stirring and/or gelling of material. Gelling is indicated by material not exhibiting clean break on pouring or coming out in lumps. Material should be brushable, flow to fill in brush marks and dry to a tack free coating.
82-076-2	1 ounce	V66V29	Accelerator		Light to dark amber colored liquid with solvent odor	V66V29 - Look for crystallization of material into hard pieces, cloudiness or precipitation in container. Liquid material under hard surface film will be less concentrated and not usable.

Collins Aerospace 2020 World List Price Catalog

Goodrich Age-Sensitive Products (continued):

Part Number	Unit of Measure	Alternate Designation	Description	Purpose	Visual Description of Material	Evidence of Degradation
74-451-AQ1						
74-451-235-1	1 pint	0165JC421	Silver Edge Sealer	Edge seal for silver Urethane silver deicers	Thin silver liquid with peppermint odor	0165JC421 - Check can for settled material that will not go back into solution on stirring and/or gelling of material. Gelling is indicated by material not exhibiting clean break on pouring or coming out in lumps. Material should be brushable, flow to fill in brush marks and dry to a tack free coating.
74-451-152	1 ounces	KE7005	Accelerator		Thin dark amber to light yellow liquid, free of crystals, ketone odor	KE-7005 - Look for crystallization of material into hard pieces, cloudiness or precipitation in container. Liquid material under hard surface film will be less concentrated and not usable.
74-451-AQ2						
74-451-235-2	1 quart	0165JC421	Silver Edge Sealer	Edge seal for silver Urethane silver deicers	Thin silver liquid with peppermint odor	0165JC421 - Check can for settled material that will not go back into solution on stirring and/or gelling of material. Gelling is indicated by material not exhibiting clean break on pouring or coming out in lumps. Material should be brushable, flow to fill in brush marks and dry to a tack free coating.
74-451-143	2 ounces	KE7005	Accelerator		Thin dark amber to light yellow liquid, free of crystals, ketone odor	KE-7005 - Look for crystallization of material into hard pieces, cloudiness or precipitation in container. Liquid material under hard surface film will be less concentrated and not usable.
74-451-AP						
74-451-234-1	24 each, 4 gm. Pouches	0165JC414	Repair Material	Repair 1/16" or smaller pinholes on silver urethane and silver Estane® pneumatic de-icers.	Thin silver liquid with peppermint odor	0165JC414 - thick silver material that is spreadable
74-451-201	8.5 grams	A1343	Accelerator		Amber to dark brown liquid, free of crystals	A-1343-B - Look for crystallization of material into hard film on top of container and cloudiness or precipitation in container. Liquid material under thin skin on top is usable material if no cloudiness or precipitation.

Collins Aerospace

Collins Aerospace is the manufacturer of Goodrich® pneumatic de-icing boots.

Goodrich® De-Icers

For additional information:
1555 Corporate Woods Parkway, Uniontown, OH 44685 U.S.A.
Tel: 800.DE-ICERS (800.334.2377)
deicers@collins.com

Scan code for more information.

This document does not contain any export controlled technical data.

collinsaerospace.com/deicing

RPL Catalog 1/2020
© Goodrich Corporation, a Collins Aerospace company, acting by and through its De-icing Specialty Systems business unit, 2020
The information contained herein was authored by Goodrich and Goodrich is solely responsible for its content.
Cessna, Beechcraft, and Hawker are trademarks or service marks of others.